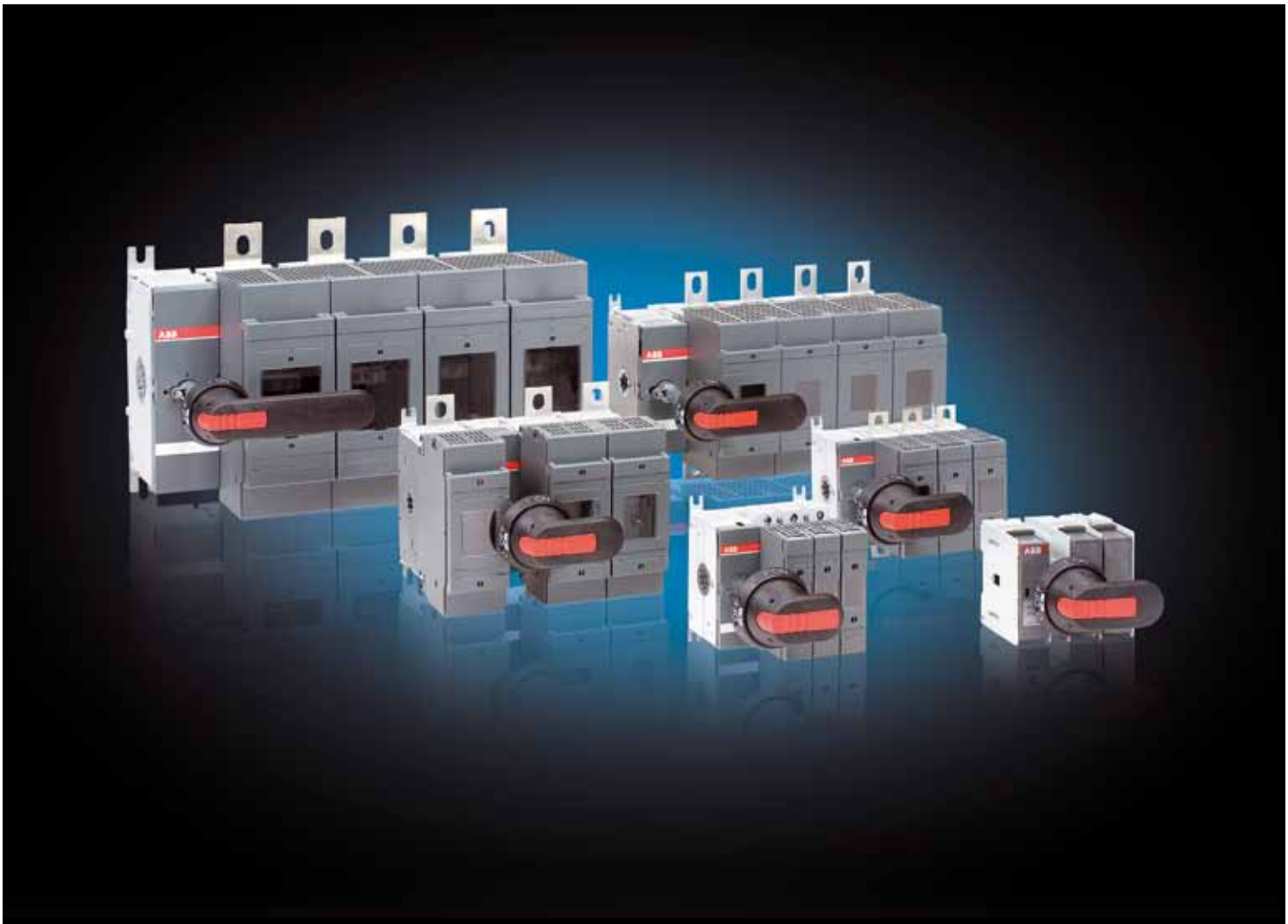

Low Voltage Products

# Fusegear
# Switch fuses OS

Power and productivity
for a better world™

# Switch fuses 16...1250

## DIN
AC23/400V



**OS16FD** 7.5 kW **OS35FD** 15 kW
**OS40FD** 18.5 kW
**OS32GD** 15 kW **OS63GD** 30 kW
**OS125GD** 55 kW **OS160GD** 75 kW
**OS200D** 110 kW
**OS250D** 140 kW
**OS400D** 220 kW **OS630D** 355 kW

## BS
AC23/415V



**OS20FB** 7.5 kW **OS32FB** 15 kW
**OS32GB** 15 kW **OS63GB** 30 kW
**OS100GB** 55 kW **OS125GB** 55 kW **OS160GB** 75 kW
**OS200B** 110 kW
**OS250B** 145 kW
**OS315B** 180 kW **OS400B** 230 kW

## NFC
AC23/400V



**OS25FF** 11 kW **OS32FF** 15 kW
**OS50GF** 22 kW
**OS125GF** 55 kW

## UL/CSA
480V
600V



**OS30FA**
15 HP
20 HP
**OS60GJ**
30 HP
50 HP
**OS100GJ**
60 HP
75 HP
**OS200J**
150 HP
200 HP
**OS400J**
250 HP
350 HP
**OS600J** 400 HP 500 HP **OS800L** 500 HP 600 HP

# Amperes



OS800D
450 kW

OS1250D
560 kW



OS630B
355 kW

OS800B
450 kW

OS1250B
560 kW






OS1200L

# Switch fuses
## OS 16...1250

## Contents:


**Features** ..... **4-5**
**Technical data** ..... **6-11**
**Ordering information** ..... **12-44**
Front operated switch fuses
DIN-types ..... 12-14
BS-types ..... 15-17
NFC-types ..... 18
Neozed, UL- and CSA-types ..... 19-20
Side operated switch fuses
DIN-types ..... 21-22
BS-types ..... 23-24
NFC-type ..... 25
Neozed, UL- and CSA-types ..... 26
Accessories
Selection overview ..... 28-29
Optional handles ..... 30-31
Extended shafts and shaft accessories ..... 32-33
Auxiliary contacts ..... 34-35
Fourth poles, neutral and earth terminals ..... 36
Solid links ..... 37
Terminal shrouds and phase barriers ..... 38
Connecting accessories ..... 39-40
Conversion kits ..... 41-42
Blown fuse indicators ..... 43
Locking and mounting accessories ..... 44
**Dimension drawings** ..... **45-62**
**Contact functions** ..... **63-64**
**Index** ..... **65-72**

# Complete range of switch fuses

## From 16 to 1 250 A, 690 V

Features within the range of ABB switch fuses include single pole to four pole versions.

- The switch fuse mechanism located in any position together with the direction of the terminals, increasing the ease of installation and adaptability to different types of cubicle designs.
- A wide selection of accessories improve the usability of the switch fuses; 6 and 8- pole, changeover, by-pass and mechanically interlocked switch combinations can be built up by means of conversion kits.

The switch fuses are available for all types of fuse links, DIN, BS, NFC, UL, CSA.

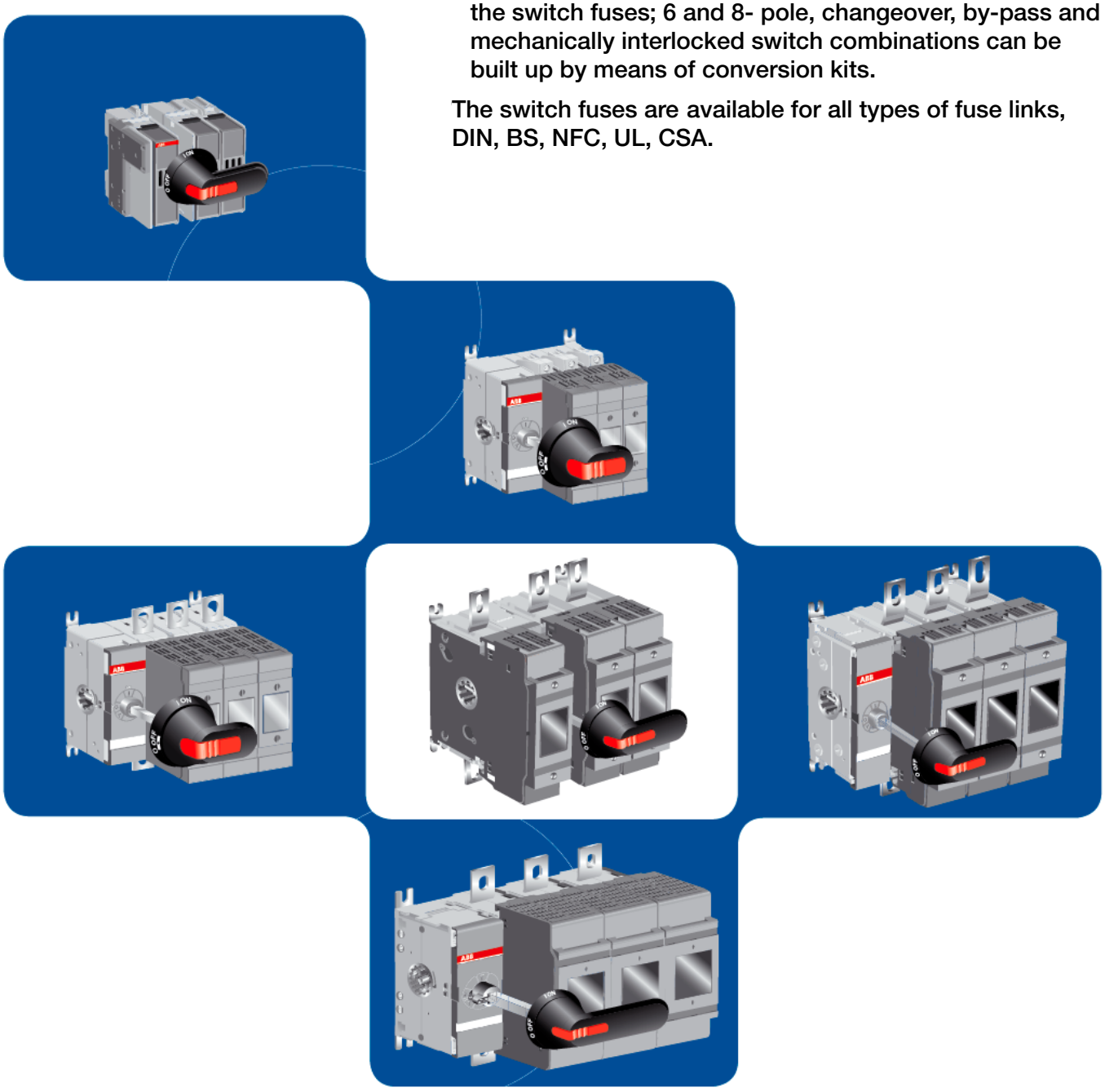

# Designed for safety

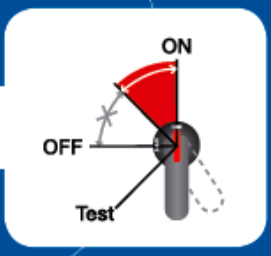


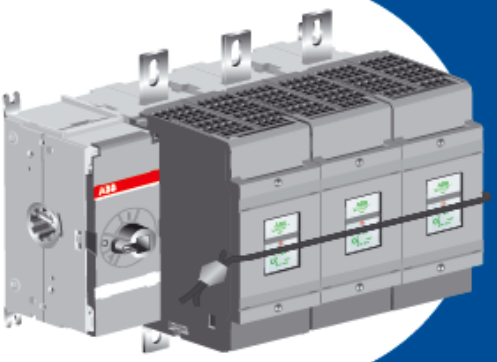

The switch fuse ensures safe operation, protecting both people and equipment.

Designed and based on substantial experience of electrical safety, the switch fuse eliminates the risk of electrical accidents:

- The fuse covers cannot be opened while the switch fuse is in the ON-position and can be sealed in the closed position.
- The double insulated external operating handle eliminates the risk of touching live parts outside the box.
- The handle indicates the position of the contacts with complete reliability in all situations.

# Easy, flexible installation



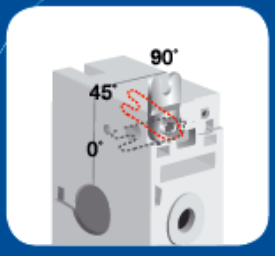


The OS 63G...1250 switch fuse is easy to use and a snap to install according to your choice: the adjustable mounting feet allow both top and side mounting of the switch fuse.

The OS switch fuse offers you flexible cabling options. The high terminal positioning with space to the back plate simplifies the mounting of cables. It's also ideal for double cabling, which in turn saves on space.

# Switch fuses OS 16-160
# Technical data

## Technical data according to IEC 60947-3

| | | Switch size | A | OS Mini 16 | OS Mini 20 | OS Mini 25 |
|---|---|---|---|---|---|---|
| Rated insulation voltage | Pollution degree 3 | | V | 1 000 | 1 000 | 1 000 |
| Dielectric strength | | 50 Hz 1min. | kV | 10 | 10 | 10 |
| Rated impulse withstand voltage | | | kV | 12 | 12 | 12 |
| Rated thermal current in ambient 35 °C | In open air | | A/W | 16/3.5 | 20/3.5 | 25/3.5 |
| and temporarily 40 °C [5] / | In enclosure[2] | | A/W | 16/3.5 | 20/3.5 | 25/3.5 |
| max. fuse power dissipation[1] | In enclosure with solid links | | A | 32 | 32 | 32 |
| ...with minimum cable cross section | | Cu | $mm^2$ | 2.5 | 2.5 | 4 |
| Rated operational voltage AC-20 and DC-20 | | | V | 1 000 | 1 000 | 1 000 |
| Rated operational current, AC-21A | | up to 500 V | A | 16 | 20 | 25 |
| | | 690 V | A | 16 | 20 | 25 |
| Rated operational current, AC-22A | | up to 500 V | A | 16 | 20 | 25 |
| | | 690 V | A | 16 | 20 | 25 |
| Rated operational current, AC-23A | | up to 500 V | A | 16 | 20 | 25 |
| | | 690 V | A | 16 | 20 | 25 |
| Rated operational current / poles in series DC-21A | | 48 V | A | 16/2 | 20/2 | 25/2 |
| | | 110-220 V | A | 16/2 | 20/2 | 25/2 |
| | | 440 V | A | 16/4 | 20/4 | 25/4 |
| Rated operational current / poles in series DC-22A | | 48 V | A | 16/2 | 20/2 | 25/2 |
| | | 110-220 V | A | 16/2 | 20/2 | 25/2 |
| | | 440 V | A | 16/4 | 20/4 | 25/4 |
| Rated operational current / poles in series DC-23A | | 48 V | A | 16/2 | 20/2 | 25/2 |
| | | 110-220 V | A | 16/2 | 20/2 | 25/2 |
| | | 440 V | A | 16/4 | 20/4 | 25/4 |
| Rated operational power, AC-23[4] | | 230 V | kW | 4 | 5.5 | 5.5 |
| | The kW-ratings are accurate for | 400 V | kW | 7.5 | 7.5 | 11 |
| | three-phase 1500 R.P.M. standard | 415 V | kW | 7.5 | 7.5 | 11 |
| | asynchronous motors. | 500 V | kW | 7.5 | 11 | 15 |
| | | 690 V | kW | 11 | 15 | 22 |
| Rated breaking capacity in category AC-23 | | up to 500 V | A | 256 | 256 | 256 |
| | | 690 V | A | 256 | 256 | 256 |
| Rated breaking capacity / poles in series | | up to 220 V | A | 128/2 | 128/2 | 128/2 |
| in category DC-23 | | 440 V | A | 128/4 | 128/4 | 128/4 |
| Rated conditional short-circuit current | at prospective SC-current | 80 kA, 415 V | kA | 9 | 9 | 9 |
| $I_p$ (r.m.s.) and corresponding max. allowed | Max. OFA_ fuse size gG / aM | | A | | | |
| cut-off current $\hat{i}_c$ | at prospective SC-current | 100 kA, 500 V | kA | 8 | 8 | 8 |
| | Max. OFA_ fuse size gG / aM | | A | | | |
| The cut-off current $\hat{i}_c$ refers to values | at prospective SC-current | 50 kA, 690 V | kA | 7 | 7 | 7 |
| listed by fuse manufacturers | Max. OFA_ fuse size gG / aM | | A | | | |
| (single phase test acc. to IEC60269). | at prospective SC-current | 80 kA, 690 V | kA | 7.5 | 7.5 | 7.5 |
| | Max. OFA_ fuse size gG / aM | | A | | | |
| Rated short-time withstand current, 1 s. | r.m.s. -value | | kA | 1 | 1 | 1 |
| Rated capacitor power | The capacitor rating of the | 400 V | kVAr | 5 | 10 | 12.5 |
| when no initial charge on the capacitor | switch-fuse is limited by | 415 V | kVAr | 5 | 10 | 12 |
| | the fuse link. | 690 V | kVAr | 8 | 15 | 20 |
| Power loss / pole | With rated current, without fuse | | W | 0.8 | 1.3 | 1.3 |
| Mechanical endurance | Divide by two for operation cycles | | Oper. | 20 000 | 20 000 | 20 000 |
| Fuse types, IEC 60269-2-1 | DIN 43620, Neozed DIN49522 | | | D 01 | | |
| | NFC 63210, 63211 | | | | | 10x38 |
| | BS 88-2, -6 -size / | | | | A1 | |
| | distance of fuse-link bolts | | mm | | M4/44.5 | |
| | | | mm | | | |
| Weight without accessories | 3-pole switch fuses | | kg | 0.7 | 0.7 | 0.7 |
| | 4-pole switch fuses | | kg | 0.9 | 0.9 | 0.9 |
| Built-in terminal size | | Cu | $mm^2$ | 0.75...10 | 0.75...10 | 0.75...10 |
| Terminal bolt size (included) | Metric thread diameter x length | | mm | | | |
| Terminal tightening torque | Counter torque required | | Nm | 2 | 2 | 2 |
| Fuse-links bolts tightening torque | | | Nm | | 2 | |
| Operating torque | Typical for 3-pole switch fuses | | Nm | 3 | 3 | 3 |

* = Utilization category B

[1] Ambient temperature 60 °C: derating 20%
Mounting on "ceiling": derating 10%,
[2] OS160G: Mounting on wall, horizontal fuses: derating 5%

[3] Max. fuse body diam. 32 mm
[4] Some fuse links limit these figures further. Starting current characteristics must be considered separately
[5] Acc. to IEC 60947-1, § 6.1.1
[6] Max. fuse body diam. 22 mm

# Switch fuses OS 16-160
## Technical data

| OS Mini 32 | OS Mini 35 | OS Mini 40 | OS 32G | OS 50G | OS 63G | OS 100G | OS 125G | OS 160G |
|---|---|---|---|---|---|---|---|---|
| 1 000<br>10<br>12 | 1 000<br>10<br>12 | 1 000<br>10<br>12 | 1 000<br>10 | 1 000<br>10 | 1 000<br>10 | 1 000<br>10 | 1 000<br>10 | 1 000<br>10 |
| 32/3.5<br>32/3.5<br>32<br>6 | 35/4<br>35/4<br>35<br>10 | 40/4.5<br>40/4.5<br>40<br>10 | 32/7.5<br>32/7.5<br>6 | 50/7.5<br>50/7.5<br>10 | 63/7.5<br>63/7.5<br>16 | 100/12<br>100/12<br>50 | 125/12<br>125/12<br>50 | 160/12<br>160/12<br>70 |
| 1 000 | 1 000 | 1 000 | 1 000 | 1 000 | 1 000 | 1 000 | 1 000 | 1 000 |
| 32 | 35 | 40 | 32 | 50 | 63 | 100 | 125 | 160 |
| 32 | 35 | 40 | 32 | 50 | 63 | 100 | 125 | 160 |
| 32<br>32 | 35<br>35 | 40<br>40 | 32<br>32 | 50<br>50 | 63<br>63 | 100<br>100 | 125<br>125 | 160<br>160 |
| 32<br>32 | 35<br>35 | 40<br>40 | 32<br>32 | 50<br>50 | 63<br>63 | 100<br>100 | 125<br>125 | 160<br>160 |
| 32/2<br>32/2<br>32/4 | 32/2<br>32/2<br>32/4 | 32/2<br>32/2<br>32/4 | 32/2<br>32/2*<br>32/4* | 50/2<br>50/2*<br>50/4* | 63/2<br>63/2*<br>50/4* | 100/2<br>100/2*<br>100/4* | 125/2<br>125/2*<br>125/4* | 160/2<br>125/2*<br>125/4* |
| 32/2<br>32/2<br>32/4 | 32/2<br>32/2<br>32/4 | 32/2<br>32/2<br>32/4 | 32/2<br>32/2* | 50/2<br>50/2* | 63/2<br>63/2* | 100/2<br>100/2* | 125/2<br>125/2* | 160/2<br>125/2* |
| 32/2<br>32/2<br>32/4 | 32/2<br>32/2<br>32/4 | 32/2<br>32/2<br>32/4 | 32/2<br>32/2* | 50/2<br>50/2* | 63/2<br>63/2* | 100/2<br>100/2* | 125/2<br>125/2* | 160/2<br>125/2* |
| 7.5<br>15<br>15<br>18.5<br>22 | 7.5<br>15<br>15<br>22<br>30 | 11<br>18.5<br>18.5<br>22<br>30 | 7.5<br>15<br>15<br>18.5<br>22 | 11<br>22<br>22<br>30<br>37 | 18.5<br>30<br>30<br>37<br>55 | 30<br>55<br>55<br>55<br>90 | 37<br>55<br>55<br>75<br>110 | 45<br>75<br>75<br>90<br>132 |
| 256<br>256 | 280<br>280 | 320<br>320 | 504<br>504 | 504<br>504 | 504<br>504 | 1280<br>1280 | 1280<br>1280 | 1280<br>1280 |
| 128/2<br>128/4 | 128/2<br>128/4 | 128/2<br>128/4 | 252/2 | 252/2 | 252/2 | 640/2 | 640/2 | 640/2 |
| 9 | 9 | 9 | 13.5<br>80/63 | 13.5<br>80/63 | 13.5<br>80/63 | 23.5<br>160/160 | 23.5<br>160/160 | 23.5<br>160/160 |
| 8 | 8 | 8 | 12.5<br>63/63 | 12.5<br>63/63 | 12.5<br>63/63 | 25.5<br>160/160 | 25.5<br>160/160 | 25.5<br>160/160 |
| 7 | 7 | 7 | 9.5<br>63/63 | 9.5<br>63/63 | 9.5<br>63/63 | 17.5<br>125/160 | 17.5<br>125/160 | 17.5<br>125/160 |
| 7.5 | 7.5 | 7.5 | 11.5<br>63/63 | 11.5<br>63/63 | 11.5<br>63/63 | 20.5<br>125/160 | 20.5<br>125/160 | 20.5<br>125/160 |
| 1 | 1 | 1 | 2.5 | 2.5 | 2.5 | 5 | 5 | 5 |
| 15<br>15<br>25 | 15<br>15<br>25 | 15<br>15<br>25 | 15<br>15<br>25 | 20<br>25<br>42 | 25<br>32<br>50 | 40<br>42<br>75 | 50<br>55<br>90 | 60<br>65<br>100 |
| 2 | 2.4 | 3.5 | 1 | 2.5 | 4 | 4 | 5 | 9 |
| 20 000 | 20 000 | 20 000 | 20 000 | 20 000 | 20 000 | 20 000 | 20 000 | 20 000 |
| 14x51<br>A1, A2, F1<br>M4/44.5 (A1)<br>M4/73 (A2) | D 02 | 000 | 000<br>A2-A3[6]<br>M5/73 | 14x51 | 000<br>A2-A3[6]<br>M5/73 | A2-A4[3]<br>M5/73, M8/94 | 000, 00<br>22x58<br>A2-A4[3]<br>M5/73, M8/94 | 000, 00<br>A2-A4[3]<br>M5/73, M8/94 |
| 0.7<br>0.9<br>0.75...10 | 0.7<br>0.9<br>0.75...10 | 0.8<br>1.0<br>0.75...10 | 1.1<br>1.3<br>2.5...25 | 1.1<br>1.3<br>2.5...25 | 1.1<br>1.3<br>2.5...25 | 1.4<br>1.8 | 1.4<br>1.8 | 1.4<br>1.8 |
| 2 | 2 | 2 | 4 | 4 | 4 | M8x25 | M8x25 | M8x25 |
| 2<br>3 | 3 | 3 | 3.5<br>5 | 5 | 3.5<br>5 | M5:3.5 M8:5<br>7 | M5:3.5 M8:5<br>7 | M5:3.5 M8:5<br>7 |

## Placing options of the operating mechanism




At the end of the switch fuse
OS_03 or 04

Between the poles
OS_12 or 22

Side operated types
OS_30 or 40
OS_03 or 04

# Switch fuses OS 200-1250
# Technical data

## Technical data according to IEC 60947-3

| | | Switch size | A | OS 200_ |
|---|---|---|---|---|
| Rated insulation voltage and rated operational voltage AC-20 and DC-20 | Pollution degree 3 | | V | 1000 |
| Dielectric strength | | 50 Hz 1min. | kV | 10 |
| Rated impulse withstand voltage | | | kV | 12 |
| Rated thermal current in ambient 35 °C and temporarily in 40 °C [5] / | In open air | | A/W | 200/17 |
| max. fuse power dissipation | In enclosure | | A/W | 200/15 |
| ...with minimum cable cross section | | Cu | mm² | 95 |
| Rated thermal current of detachable neutral | In open air / Cu cable or bar cross section | In "N3" types | A/mm² | 290/120 |
| Derating, mounting on wall horizontal fuses | In open air or ventilated enclosure | | % | 0 |
| | Totally enclosed | | % | 5 |
| Derating, mounting on 'ceiling' | | | % | 10 |
| Derating at 60 °C | In open air / in enclosure | | % | 20/20 |
| Rated operational current AC-21A | | ≤ 500 V | A | 200 |
| | | 690 V | A | 200 |
| Rated operational current AC-22A | | ≤ 415 V | A | 200 |
| | | 500 V | A | 200 |
| | | 690 V | A | 200 |
| Rated operational current AC-23A | | ≤ 415 V | A | 200 |
| | | 500 V | A | 200 |
| | | 690 V | A | 200 |
| Rated operational current / poles in series DC-21A, DC-22A and DC-23A | | ≤ 220 V | A | 200/1 |
| | | 440 V | A | 200/2 |
| | | 660 V | A | 200/3 |
| | | 750 V | A | 180/4 |
| | | 880 V | A | 180/4 |
| Rated operational power AC-23[1] | | 230 V | kW | 60 |
| | | 400 V | kW | 110 |
| | | 415 V | kW | 110 |
| | | 500 V | kW | 132 |
| | | 690 V | kW | 200 |
| Rated breaking capacity AC-23 | | ≤ 500 V | A | 1600 |
| | | 690 V | A | 1600 |
| Rated conditional short-circuit current $I_p$ (r.m.s.) | $I_p$ (r.m.s.) | 80 kA, 415 V | kA | 35 |
| | Max. OFA_ fuse size gG/aM | | A | 250/200 |
| and corresponding max. allowed cut-off current $\hat{i}_c$ | $I_p$ (r.m.s.) | 100 kA, 500 V | kA | 37.5 |
| | Max. OFA_ fuse size gG/aM | | A | 250/200 |
| | $I_p$ (r.m.s.) | 80 kA, 690 V | kA | 25 |
| | Max. OFA_ fuse size gG/aM | | A | 160/ |
| The cut-off current $\hat{i}_c$ refers to values listed by fuse | $I_p$ (r.m.s.) | 50 kA, 415 V | kA | 28 |
| | Max. BS fuse size gG/gM | | A | 200/200M315 |
| manufacturers (single phase test acc. to IEC60269) | $I_p$ (r.m.s.) | 80 kA, 690 V | kA | 28 |
| | Max. BS fuse size gG/gM | | A | 200/200M250 |
| Rated short-time withstand current, 1s. | r.m.s. -value | | kA | 8 |
| | Max. distance from switch frame to nearest busbar/cable support | | mm | 150 |
| Rated capacitor power when no initial charge of the capacitor | The capacitor ratings of the switch-fuses are limited by the fuse links | 400 V | kVAr | 90 |
| | | 415 V | kVAr | 100 |
| | | 500 V | kVAr | 120 |
| | | 690 V | kVAr | 160 |
| Power loss / pole | With rated current, without fuse | | W | 8 |
| Mechanical endurance | Divide by two for operation cycles | | Oper. | 20 000 |
| Fuse types, IEC 60269-2 | Sec. I, DIN 43620 | | | 0 |
| | Sec. IA, NFC 0-3 Ref.A, 4a Ref.B | | | |
| | Sec. II, BS 88 | | | B1-B2 |
| | Size / distance of fuse-link bolts | | mm | M6/111 |
| Weight without accessories | 3-pole switch fuses | | kg | 2.6 |
| Terminal bolt size (included) | Metric thread diameter x length | | mm | M8x25 |
| Terminal tightening torque | Counter torque required | | Nm | 15-22 |
| Fuse-links bolts tightening torque | | | Nm | 4 |
| Operating torque | Typical for 3-pole switch fuses | | Nm | 7 |

[1] These values are given for guidance and may vary acc. to the motor manufacturer.
[2] Max fuse body dia 52 mm.
[3] Max fuse body dia 62 mm.
[4] Category B
[5] Acc. to IEC 60957-2, § 6.1.1.

# Switch fuses OS 200-1250
# Technical data

| OS 250_ | OS 315_ | OS 400_ | OS 630_ | OS 800_ | OS 1250_ |
|---|---|---|---|---|---|
| 1000<br>10<br>12 | 1000<br>10<br>12 | 1000<br>10<br>12 | 1000<br>10<br>12 | 1000<br>10<br>12 | 1000<br>10<br>12 |
| 250/23<br>250/20<br>120 | 315/32<br>315/32<br>185 | 400/45<br>400/30<br>240 | 630/60<br>570/50<br>2 x 185 | 800/65<br>720/55<br>2 x 240 | 1250/110<br>1000/85<br>2 x 400 |
| 290/120 | 450/240 | 450/240 | 900/2 X 240 | 900/2 x 240 | 1250/2 x 400 |
| 0<br>5 | 0<br>5 | 4<br>8 | 0<br>5 | 4<br>8 | 4<br>8 |
| 10 | 10 | 10 | 10 | 10 | 10 |
| 20/20 | 20/20 | 20/20 | 20/20 | 20/20 | 20/20 |
| 250<br>250 | 315<br>315 | 400<br>400 | 630<br>630 | 800<br>800 | 1250 [4]<br>1250 [4] |
| 250<br>250<br>250 | 315<br>315<br>315 | 400<br>400<br>400 | 630<br>630<br>630 | 800<br>800<br>800 | 1250<br>1250 [4]<br>1250 [4] |
| 250<br>250<br>250 | 315<br>315<br>315 | 400<br>400<br>400 | 630<br>630<br>630 | 800<br>800<br>800 | 1000<br>1000 [4]<br>1000 [4] |
| 250/1<br>250/2<br>250/3<br>230/4<br>230/4 | 315/2<br>315/3[4]<br>315/4[4]<br>315/4[4] | 400/2<br>400/3[4]<br>400/4[4]<br>400/4[4] | 630/1[4]<br>630/2[4]<br>630/3[4]<br>630/4[4]<br>630/4[4] | 800/1[4]<br>800/2[4]<br>720/3[4]<br>720/4[4]<br>720/4[4] | |
| 75<br>140<br>145<br>170<br>250 | 100<br>160<br>180<br>220<br>315 | 132<br>220<br>230<br>280<br>400 | 200<br>355<br>355<br>450<br>630 | 250<br>450<br>450<br>560<br>710 | 315<br>560<br>560<br>710<br>1000 |
| 2000<br>2000 | 3200<br>3200 | 3200<br>3200 | 6400<br>6400 | 6400<br>6400 | 8000<br>8000 |
| 40.5<br>355/315 | | 59<br>500/500 | 77<br>800/800 | 77<br>800/800 | 89<br>1250/1250 |
| 37.5<br>250/250 | | 63.5<br>500/500 | 83<br>800/800 | 83<br>800/800 | 105<br>1250/- |
| 32.5<br>200/250 | | 46<br>315/400 | 55<br>-/630 | 55<br>-/630 | 88<br>1000/1000 |
| 28<br>250/200M315 | 44<br>400/400M500 | 44<br>400/400M500 | | | |
| 28<br>250/200M250 | 48<br>400/400M450 | 48<br>400/400M450 | 55 | 55 | 109<br>1250/- |
| 8<br>150 | 14<br>150 | 14<br>150 | 18<br>150 | 18<br>150 | 40<br>150 |
| 105<br>115<br>135<br>190 | 145<br>160<br>175<br>250 | 180<br>200<br>215<br>325 | 250<br>270<br>300<br>450 | 310<br>340<br>375<br>550 | 440<br>460<br>550<br>750 |
| 13 | 19 | 30 | 46 | 75 | 75 |
| 20 000 | 16 000 | 16 000 | 10 000 | 10 000 | 6000 |
| 0-1<br>1<br>B1-B3[2]<br>M8/111 | <br><br>B1-B4[3]<br>M8/111 | 0-2<br>2<br>B1-B4[3]<br>M8/111 | 3<br>3<br>C1-C2<br>M10/133, 184 | 3<br>3<br>C1-C3<br>M10/133, 184 | 4, 4 a<br>4 a<br>D1<br>2xM12/149 |
| 3.1 | 5.7 | 5.7 | 11.5 | 11.5 | 29 |
| M10x30<br>30-44<br>5<br>7 | M10x30<br>30-44<br>20<br>19 | M10x30<br>30-44<br>20<br>19 | M12x40<br>50-75<br>M10:30 M12:40<br>38 | M12x40<br>50-75<br>M10:30 M12:40<br>38 | M12x50<br>50-75<br>M12:40<br>65 |

## Placing options of the operating mechanism

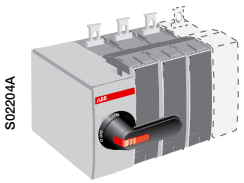


At the end of the switch fuse
OS_03 or 04

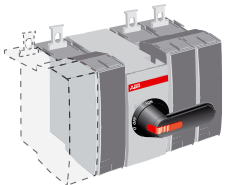

Between the poles
OS_12 or 22

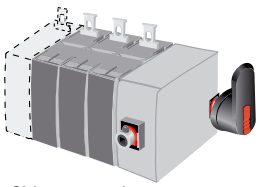

Side operated types
OS_30 or 40
OS_03 or 04

# Fusible disconnect switches OS 30-800
# Technical data

| | | | | A | OS Mini | OS |
|---|---|---|---|---|---|---|
| | | | Switch size | | 30 | 60G |
| | | | Approvals | 3 pole | UL 98/CSA/IEC | UL 98/CSA/IEC |
| | | | | 4 pole | UL 98/CSA/IEC | UL 98/CSA/IEC |

## Technical data according to UL/CSA

| | | | | | |
|---|---|---|---|---|---|
| General purpose amp rating | pf= 0.7...0.8 | -40° to 40 °C | A | 30 | 60 |
| Max. oprerating voltage | | | V | 600 | 600 |
| Max. horsepower rating / motor FLA current | pf= 0.4...0.5 | 240 V | HP/A | 7.5/22.0 | 15/42.0 |
| | Three phase | 480 V | HP/A | 15/21.0 | 30/40.0 |
| | | 600 V | HP/A | 20/22.0 | 50/52.0 |
| | Single phase | 120 V | HP/A | 2/24.0 | |
| | | 240 V | HP/A | 3/17.0 | |
| Short circuit rating with fuse | | | kA | 200 | 100 |
| | | UL fuse size | A | 30 | 60 |
| | | UL fuse type | | J/CC | J |
| | | CSA fuse type | | C | |
| Min. electrical endurance | pf= 0.75...0.8 | operation cycles | | 6000 | 6000 |
| Mechanical endurance | | operation | | 20 000 | 20 000 |
| Terminal lug kits | | | | Integral | Integral |
| Wire range | | | AWG | #18-8 | #14-4 |
| Torque | Wire tightening | | lb.in. | 17 | 30 |
| | Lug mounting | | lb.in. | N/A | N/A |

## Technical data according to IEC 60947-3

| | | | | | |
|---|---|---|---|---|---|
| Rated insulation voltage | Pollution degree 3 | | V | 1 000 | 1 000 |
| Dielectric strength | | 50 Hz 1min. | kV | 10 | 10 |
| Rated impulse withstand voltage | | | kV | 12 | |
| Rated thermal current in ambient 40 °C / | In open air | | A/W | 32/3.5 | 63/7.5 |
| max. fuse power dissipation[1)] | In enclosure[2)] | | A/W | 32/3.5 | 63/7.5 |
| ...with minimum cable cross section | | Cu | $mm^2$ | 6 | 16 |
| Rated operational current, AC-23A | | up to 500 V | A | 32 | 63 |
| | | 690 V | A | 32 | 63 |
| Rated operational power, AC-23[3)] | The kW-ratings are accurate for | 230 V | kW | 7.5 | 18.5 |
| | three-phase 1500 R.P.M. standard | 400 V | kW | 15 | 30 |
| | asynchronous motors. | 415 V | kW | 15 | 30 |
| | | 500 V | kW | 18.5 | 37 |
| | | 690 V | kW | 22 | 55 |
| Rated breaking capacity in category AC-23 | | up to 500 V | A | 256 | 504 |
| | | 690 V | A | 256 | 504 |
| Rated short-time withstand current, 1 s | r.m.s. -value | | kA | 1 | 2.5 |
| Power loss / pole | With rated current, without fuse | | W | 2 | 4 |
| Weight without accessories | 3-pole switch fuses | | kg | 0.7 | 1.3 |
| | 4-pole switch fuses | | kg | 0.9 | 1.6 |
| Built-in terminal size | | Cu | $mm^2$ | 0.75...10 | 2.5...25 |
| Terminal bolt size (included) | Metric thread diameter x length | | mm | | |
| Fuse-links bolts tightening torque | | | Nm | 2 | 3.5 |

[1)] = Utilization category B
[1)] Ambient temperature 60 °C: derating 20%
[2)] Mounting on "ceiling": derating 10%. Mounting on wall, horizontal fuses: derating 8%
[3)] Some fuse links limit these figures further. Starting current characteristics must be considered separately.

# Fusible disconnect switches OS 30-800
# Technical data

| OS 100G | OS 200 | OS 400 | OS 600 | OS 800 | OS 1200 |
|---|---|---|---|---|---|
| UL 98/CSA/IEC<br>UL 98/CSA/IEC | UL 98/CSA/IEC<br>UL 98/CSA/IEC | UL 98/CSA/IEC<br>UL 98/CSA/IEC | UL 98/CSA/IEC<br>UL 98/CSA/IEC | UL 98/CSA/IEC<br>UL 98/CSA/IEC | UL 98/CSA/IEC<br>UL 98/CSA/IEC |
| 100<br>600 | 200<br>600 | 400<br>600 | 600<br>600 | 800<br>600 | 1200<br>600 |
| 30/80.0<br>60/77.0<br>75/77.0 | 60/154.0<br>125/156.0<br>150/144.0 | 125.0/312.0<br>250.0/302.0<br>350.0/336.0 | 200/480.0<br>400/477.0<br>500/472.0 | 250/602.0<br>500/590.0<br>500/472.0 | |
| | | | | | |
| 100<br>100<br>J | 200<br>200<br>J | 200<br>400<br>J | 200<br>600<br>J | 200<br>800<br>L | 200<br>1200<br>L |
| 6000<br>20 000 | 6000<br>16 000 | 1000<br>12 000 | 1000<br>4000 | 500<br>3000 | 500<br>2000 |
| OZXA-24<br>#14-2/0 | OZXA-200<br>#4-300MCM | OZXA-400<br>#2-600MCM | OZXA-800<br>(2)#2-600MCM | OZXA-800<br>(2)#2-600MCM | OZXA-1200<br>(4)#2-600MCM |
| 120<br>50 | 275 | 375 | 500<br>480 | 500<br>480 | 500<br>480 |
| 1 000<br>10 | 1 000<br>10<br>12 | 1 000<br>10<br>12 | 1 000<br>10<br>12 | 1 000<br>10<br>12 | 1000<br>10<br>12 |
| 160/12 | 200/17 | 400/45 | 630/60 | 800/65 | 1250/110 |
| 160/10, 135/12 | 200/15 | 400/30 | 570/50 | 720/55 | 1000/85 |
| 70 | 95 | 240 | 2x185 | 2x240 | 2x400 |
| 160<br>160 | 200<br>200 | 400<br>400 | 630<br>630 | 800<br>800 | 1000 *)<br>1000 *) |
| 45<br>75<br>75<br>90<br>132 | 60<br>110<br>110<br>132<br>200 | 132<br>220<br>230<br>280<br>400 | 200<br>355<br>355<br>450<br>630 | 250<br>450<br>450<br>560<br>710 | 315 *)<br>560 *)<br>560 *)<br>710 *)<br>1000 *) |
| 1280<br>1280 | 1600<br>1600 | 3200<br>3200 | 6400<br>6400 | 6400<br>6400 | 8000<br>8000 |
| 5<br>9 | 8<br>8 | 14<br>30 | 20<br>46 | 20<br>75 | <br>75 |
| 1.5<br>1.8 | 2.6 | 5.7 | 11.5 | 11.5 | 29 |
| M6x20<br>M5:3.5 M8:5 | M8x25<br>4 | M10x30<br>20 | M12x40<br>40 | M12x40<br>40 | M12x50<br>40 |


S01382A

OS40FD12000 (OS Mini)


S07000

OS32G...63GD12P


S07001

OS125G...160GD12P


A04172

OS32G...63GD03P


A04173

OS125G...160GD03P

## Front operated switch fuses

Including terminal bolt kit in OS125G...160G, a black ON-OFF plastic handle and shaft as standard. The handle is IP65 protected, padlockable in the OFF-position and with door interlock in the ON-position. The shaft is adjustable for a range of installation depths.

| Rated current AC-20…23 ≤ 690V [A] | Rated power AC-23 400/500/690V [kW] | Fuse size | Number of poles | Type | Order number | Units/ type [pcs] | Weight [kg] |
|---|---|---|---|---|---|---|---|
| **Mechanism between the poles** | | | | | | | |
| Protected tunnel terminals, IP20 | | | | | | | |
| 40 | 18.5/22/30 | 000 | 3 | OS40FD12000 | 1SCA108914R1001 | 1 | 0.8 |
| 40 | 18.5/22/30 | 000 | 4 | OS40FD22000N1 | 1SCA108938R1001 | 1 | 1.0 |
| 32 | 15/18.5/22 | 000 | 3 | OS32GD12P | 1SCA114581R1001 | 1 | 1.3 |
| 32 | 15/18.5/22 | 000 | 4 | OS32GD22N2P | 1SCA115202R1001 | 1 | 1.6 |
| 32 | 15/18.5/22 | 000 | 4 | OS32GD22FP | 1SCA115205R1001 | 1 | 1.6 |
| 63 | 30/37/55 | 000 | 3 | OS63GD12P | 1SCA115227R1001 | 1 | 1.3 |
| 63 | 30/37/55 | 000 | 4 | OS63GD22N2P | 1SCA115230R1001 | 1 | 1.6 |
| 63 | 30/37/55 | 000 | 4 | OS63GD22FP | 1SCA115232R1001 | 1 | 1.6 |
| Terminal bolt kit | | | | | | | |
| 125 | 55/75/110 | 000, 00 | 3 | OS125GD12P | 1SCA115641R1001 | 1 | 1.5 |
| 125 | 55/75/110 | 000, 00 | 4 | OS125GD22N2P | 1SCA115880R1001 | 1 | 1.8 |
| 125 | 55/75/110 | 000, 00 | 4 | OS125GD22FP | 1SCA116732R1001 | 1 | 1.8 |
| 160 | 75/90/132 | 000, 00 | 3 | OS160GD12P | 1SCA115643R1001 | 1 | 1.5 |
| 160 | 75/90/132 | 000, 00 | 4 | OS160GD22N2P | 1SCA115884R1001 | 1 | 1.8 |
| 160 | 75/90/132 | 000, 00 | 4 | OS160GD22FP | 1SCA116855R1001 | 1 | 1.8 |
| **Mechanism at the end of the switch fuse** | | | | | | | |
| Protected tunnel terminals, IP20 | | | | | | | |
| 32 | 15/18.5/22 | 000 | 3 | OS32GD03P | 1SCA115189R1001 | 1 | 1.3 |
| 32 | 15/18.5/22 | 000 | 4 | OS32GD04N2P | 1SCA115193R1001 | 1 | 1.6 |
| 32 | 15/18.5/22 | 000 | 4 | OS32GD04FP | 1SCA115196R1001 | 1 | 1.6 |
| 63 | 30/37/55 | 000 | 3 | OS63GD03P | 1SCA115207R1001 | 1 | 1.3 |
| 63 | 30/37/55 | 000 | 4 | OS63GD04N2P | 1SCA115209R1001 | 1 | 1.6 |
| 63 | 30/37/55 | 000 | 4 | OS63GD04FP | 1SCA115228R1001 | 1 | 1.6 |
| Terminal bolt kit | | | | | | | |
| 125 | 55/75/110 | 000, 00 | 3 | OS125GD03P | 1SCA115639R1001 | 1 | 1.5 |
| 125 | 55/75/110 | 000, 00 | 4 | OS125GD04N2P | 1SCA115877R1001 | 1 | 1.8 |
| 125 | 55/75/110 | 000, 00 | 4 | OS125GD04FP | 1SCA115686R1001 | 1 | 1.8 |
| 160 | 75/90/132 | 000, 00 | 3 | OS160GD03P | 1SCA115399R1001 | 1 | 1.5 |
| 160 | 75/90/132 | 000, 00 | 4 | OS160GD04N2P | 1SCA115882R1001 | 1 | 1.8 |
| 160 | 75/90/132 | 000, 00 | 4 | OS160GD04FP | 1SCA115402R1001 | 1 | 1.8 |

## Shafts and handles included as standard

| Suitable for switches | Included shaft | Included handle | Included terminal bolts |
|---|---|---|---|
| OS40_ | OXP6X150 | OHB65J6 | |
| OS32G_...63G_ | OXP6X161 | OHB45J6 | |
| OS125G_...160G_ | OXP6X161 | OHB65J6 | M8X25 |

F = Fused switched neutral
N1 = Non-fused switched neutral on the left side
N2 = Non-fused switched neutral on the right side



OS200D03P



OS250D03N3P



OS250D04P



OS250D22N2P



OS400D03P



OS630D03P

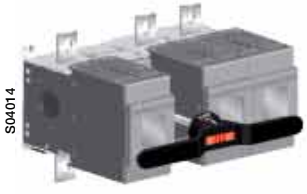

OS1250D12P

## Front operated switch fuses

Including terminal bolt kit, a black ON-OFF plastic handle and shaft as standard. The handle is IP65 protected, padlockable in the OFF-position and with door interlock in the ON-position. The shaft is adjustable for a range of installation depths.

| Rated current AC-20...23 ≤ 690V [A] | Rated power AC-23 400/500/690V [kW] | Number of poles | Fuse size | Type | Order number | Units/ type [pcs] | Weight [kg] |
|---|---|---|---|---|---|---|---|
| **Mechanism between the poles** | | | | | | | |
| 200 | 110/132/200 | 3 | 00 | OS200DZ12P | 1SCA022820R9150 | 1 | 3.3 |
| 200 | 110/132/200 | 3 | 0 | OS200D12P | 1SCA022721R3050 | 1 | 3.3 |
| 200 | 110/132/200 | 4 | 0 | OS200D22N2P | 1SCA022721R3130 | 1 | 4.2 |
| 250 | 145/170/250 | 3 | 0-1 | OS250D12P | 1SCA022726R8380 | 1 | 4.3 |
| 250 | 145/170/250 | 4 | 0-1 | OS250D22N2P | 1SCA022726R8460 | 1 | 5.1 |
| 400 | 230/280/400 | 3 | 0-2 | OS400D12P | 1SCA022753R3800 | 1 | 7.1 |
| 400 | 230/280/400 | 4 | 0-2 | OS400D22N2P | 1SCA022753R1770 | 1 | 9.1 |
| 630 | 355/450/630 | 3 | 3 | OS630D12P | 1SCA022825R3810 | 1 | 13.6 |
| 630 | 355/450/630 | 4 | 3 | OS630D22N2P | 1SCA022825R4450 | 1 | 16.9 |
| 800 | 450/560/710 | 3 | 3 | OS800D12P | 1SCA022825R5340 | 1 | 13.6 |
| 800 | 450/560/710 | 4 | 3 | OS800D22N2P | 1SCA022825R5510 | 1 | 16.9 |
| 1250A[1] 1000A[2] | 560/710/1000 | 3 | 4 | OS1250D12P | 1SCA105246R1001 | 1 | 46 |
| 1250A[1] 1000A[2] | 560/710/1000 | 4 | 4 | OS1250D22N2P | 1SCA107933R1001 | 1 | 55 |
| 1250A[1] 1000A[2] | 560/710/1000 | 3 | 4a | OS1250DA12P | 1SCA105241R1001 | 1 | 46 |
| 1250A[1] 1000A[2] | 560/710/1000 | 4 | 4a | OS1250DA22N2P | 1SCA107935R1001 | 1 | 55 |
| **Mechanism at the end of the switch fuse** | | | | | | | |
| 200 | 110/132/200 | 3 | 00 | OS200DZ03P | 1SCA022797R3440 | 1 | 3.3 |
| 200 | 110/132/200 | 4 | 00 | OS200DZ04N2P | 1SCA022820R9230 | 1 | 4.2 |
| 200 | 110/132/200 | 3 | 0 | OS200D03P | 1SCA022709R9500 | 1 | 3.3 |
| 200 | 110/132/200 | 3+N | 0 | OS200D03N3P | 1SCA022749R8710 | 1 | 3.4 |
| 200 | 110/132/200 | 4 | 0 | OS200D04N2P | 1SCA022709R9680 | 1 | 4.2 |
| 200 | 110/132/200 | 4 | 0 | OS200D04FP | 1SCA022725R4750 | 1 | 4.2 |
| 250 | 145/170/250 | 3 | 0-1 | OS250D03P | 1SCA022719R0090 | 1 | 4.3 |
| 250 | 145/170/250 | 3+N | 0-1 | OS250D03N3P | 1SCA022749R9430 | 1 | 4.4 |
| 250 | 145/170/250 | 4 | 0-1 | OS250D04N2P | 1SCA022719R2380 | 1 | 5.1 |
| 250 | 145/170/250 | 4 | 0-1 | OS250D04FP | 1SCA022726R8620 | 1 | 5.1 |
| 400 | 230/280/400 | 3 | 0-2 | OS400D03P | 1SCA022719R0250 | 1 | 7.1 |
| 400 | 230/280/400 | 3+N | 0-2 | OS400D03N3P | 1SCA022753R9320 | 1 | 7.5 |
| 400 | 230/280/400 | 4 | 0-2 | OS400D04N2P | 1SCA022719R2460 | 1 | 9.1 |
| 400 | 230/280/400 | 4 | 0-2 | OS400D04FP | 1SCA022753R7110 | 1 | 9.1 |
| 630 | 355/450/630 | 3 | 3 | OS630D03P | 1SCA022825R2830 | 1 | 13.6 |
| 630 | 355/450/630 | 3+N | 3 | OS630D03N3P | 1SCA100858R1001 | 1 | 14.5 |
| 630 | 355/450/630 | 4 | 3 | OS630D04N2P | 1SCA022825R4290 | 1 | 16.9 |
| 630 | 355/450/630 | 4 | 3 | OS630D04FP | 1SCA022825R4610 | 1 | 16.9 |
| 800 | 450/560/710 | 3 | 3 | OS800D03P | 1SCA022825R4880 | 1 | 13.6 |
| 800 | 450/560/710 | 3+N | 3 | OS800D03N3P | 1SCA100859R1001 | 1 | 14.5 |
| 800 | 450/560/710 | 4 | 3 | OS800D04N2P | 1SCA022825R5180 | 1 | 16.9 |
| 800 | 450/560/710 | 4 | 3 | OS800D04FP | 1SCA022825R5000 | 1 | 16.9 |
| 1250A[1] 1000A[2] | 560/710/1000 | 3 | 4 | OS1250D03P | 1SCA105475R1001 | 1 | 46 |
| 1250A[1] 1000A[2] | 560/710/1000 | 3+N | 4 | OS1250D03N3P | 1SCA107932R1001 | 1 | 47 |
| 1250A[1] 1000A[2] | 560/710/1000 | 4 | 4 | OS1250D04N2P | 1SCA105248R1001 | 1 | 55 |
| 1250A[1] 1000A[2] | 560/710/1000 | 4 | 4 | OS1250D04FP | 1SCA105473R1001 | 1 | 55 |
| 1250A[1] 1000A[2] | 560/710/1000 | 3 | 4a | OS1250DA03P | 1SCA105238R1001 | 1 | 46 |
| 1250A[1] 1000A[2] | 560/710/1000 | 3+N | 4a | OS1250DA03N3P | 1SCA107934R1001 | 1 | 47 |
| 1250A[1] 1000A[2] | 560/710/1000 | 4 | 4a | OS1250DA04N2P | 1SCA105243R1001 | 1 | 55 |
| 1250A[1] 1000A[2] | 560/710/1000 | 4 | 4a | OS1250DA04FP | 1SCA105240R1001 | 1 | 55 |

## Shafts and handles included as standard

| Suitable for switches | Included shaft | Included handle | Included terminal bolts |
|---|---|---|---|
| OS200_P | OXP6X210 | OHB65J6 | M8X25 |
| OS250_P | OXP6X210 | OHB65J6 | M10X30 |
| OS400_P | OXP12X250 | OHB95J12 | M10X30 |
| OS630...800_P | OXP12X280 | OHB145J12 | M12X40 |
| OS1250_P | OXP12X395 | OHB200J12P | M12x50 |

F = Fused switched neutral
N2 = Non-fused switched neutral on the right side
N3 = Include a detachable neutral link integrated into the mechanism.

[1] AC-20...22
[2] AC-23


S07002
OS32G...63GD03K


S07003
OS125G...160GD03K


S02013A
OS250D03K

## Front operated switch fuses with direct mounted handle

Including a black Test-OFF-ON plastic handle and shaft as standard. The handle is padlockable in the OFF-position.

| Rated current AC-20…23 ≤ 690V [A] | Rated power AC-23 400/500/690V [kW] | Number of poles | Fuse size | Type | Order number | Units/ type [pcs] | Weight [kg] |
|---|---|---|---|---|---|---|---|
| Protected tunnel terminals, IP20 | | | | | | | |
| 32 | 15/18.5/22 | 3 | 000 | OS32GD03K | 1SCA116733R1001 | 1 | 1.3 |
| 32 | 15/18.5/22 | 4 | 000 | OS32GD04N2K | 1SCA116734R1001 | 1 | 1.6 |
| 32 | 15/18.5/22 | 4 | 000 | OS32GD04FK | 1SCA116737R1001 | 1 | 1.6 |
| 63 | 30/37/55 | 3 | 000 | OS63GD03K | 1SCA116738R1001 | 1 | 1.3 |
| 63 | 30/37/55 | 4 | 000 | OS63GD04N2K | 1SCA116876R1001 | 1 | 1.6 |
| 63 | 30/37/55 | 4 | 000 | OS63GD04FK | 1SCA116739R1001 | 1 | 1.6 |
| Terminal bolt kit | | | | | | | |
| 125 | 55/75/110 | 3 | 000, 00 | OS125GD03K | 1SCA116878R1001 | 1 | 1.5 |
| 125 | 55/75/110 | 4 | 000, 00 | OS125GD04N2K | 1SCA116740R1001 | 1 | 1.8 |
| 125 | 55/75/110 | 4 | 000, 00 | OS125GD04FK | 1SCA116741R1001 | 1 | 1.8 |
| 160 | 75/90/132 | 3 | 000, 00 | OS160GD03K | 1SCA116742R1001 | 1 | 1.5 |
| 160 | 75/90/132 | 4 | 000, 00 | OS160GD04N2K | 1SCA116743R1001 | 1 | 1.8 |
| 160 | 75/90/132 | 4 | 000, 00 | OS160GD04FK | 1SCA116880R1001 | 1 | 1.8 |
| 200 | 110/132/200 | 3 | 0 | OS200D03K | 1SCA022764R7130 | 1 | 3.3 |
| 200 | 110/132/200 | 4 | 0 | OS200D04N2K | 1SCA022768R7430 | 1 | 4.2 |
| 250 | 145/170/250 | 3 | 0-1 | OS250D03K | 1SCA022763R6360 | 1 | 4.3 |
| 250 | 145/170/250 | 4 | 0-1 | OS250D04N2K | 1SCA022763R6440 | 1 | 5.1 |
| 400 | 230/280/400 | 3 | 0-2 | OS400D03K | 1SCA022779R5410 | 1 | 7.0 |
| 400 | 230/280/400 | 4 | 0-2 | OS400D04N2K | 1SCA022763R7250 | 1 | 9.0 |
| 630 | 355/450/630 | 3 | 3 | OS630D03K | 1SCA108704R1001 | 1 | 13 |
| 630 | 355/450/630 | 4 | 3 | OS630D04N2K | 1SCA108705R1001 | 1 | 16 |
| 800 | 450/560/710 | 3 | 3 | OS800D03K | 1SCA108725R1001 | 1 | 13 |
| 800 | 450/560/710 | 4 | 3 | OS800D04N2K | 1SCA108722R1001 | 1 | 16 |
| 1250A[1] 1000A[2] | 560/710/1000 | 3 | 4 | OS1250D03K | 1SCA108718R1001 | 1 | 45 |
| 1250A[1] 1000A[2] | 560/710/1000 | 4 | 4 | OS1250D04N2K | 1SCA108719R1001 | 1 | 54 |
| 1250A[1] 1000A[2] | 560/710/1000 | 3 | 4a | OS1250DA03K | 1SCA108720R1001 | 1 | 45 |
| 1250A[1] 1000A[2] | 560/710/1000 | 4 | 4a | OS1250DA04N2K | 1SCA108721R1001 | 1 | 54 |

## Shafts and handles included as standard

| Suitable for switches | Included handle and shaft kit | Included terminal bolts |
|---|---|---|
| OS32G...63G_K | OSV200BK | - |
| OS125G...160G_K | OSV200BK | M8X25 |
| OS200_K | OSV250DK | M8X25 |
| OS250_K | OSV250DK | M10X30 |
| OS400_K | OSV400DK | M10X30 |
| OS630...800_K | OSV800DK | M12X40 |
| OS1250_K | OSV1250DK | M12x50 |

F = Fused fourth pole
N2 = Non-fused switched neutral on the right side

[1] AC-20…22
[2] AC-23




(OS Mini)
OS20...32FB12A1
OS32FB12A2
OS32FB12F1




OS32G...63GB12P

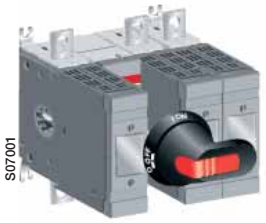


OS100G...160GB12P




OS32G...63GB03P




OS100G...160GB03P

## Front operated switch fuses

Including terminal bolt kit in OS100G...160G, a black ON-OFF plastic handle and shaft as standard. The handle is IP65 protected, padlockable in the OFF-position and with door interlock in the ON-position. The shaft is adjustable for a range of installation depths.

| Rated current AC-20...23 ≤ 690V [A] | Rated power AC-23 415/500/690V [kW] | Fuse size | Number of poles | Type | Order number | Units/ type [pcs] | Weight [kg] |
|---|---|---|---|---|---|---|---|
| **Mechanism between the poles** | | | | | | | |
| Protected tunnel terminals, IP20 | | | | | | | |
| 20 | 7.5/11/15 | A1 | 3 | OS20FB12A1 | 1SCA108790R1001 | 1 | 0.7 |
| 20 | 7.5/11/15 | A1 | 4 | OS20FB22A1N1 | 1SCA108796R1001 | 1 | 0.9 |
| 32 | 15/18/25 | A1 | 3 | OS32FB12A1 | 1SCA108840R1001 | 1 | 0.7 |
| 32 | 15/18/25 | A1 | 4 | OS32FB22A1N1 | 1SCA108853R1001 | 1 | 0.9 |
| 32 | 15/18.5/22 | A2 | 3 | OS32FB12A2 | 1SCA108847R1001 | 1 | 0.7 |
| 32 | 15/18.5/22 | A2 | 4 | OS32FB22A2N1 | 1SCA108863R1001 | 1 | 0.9 |
| 32 | 15/18.5/22 | F1 | 3 | OS32FB12F1 | 1SCA108851R1001 | 1 | 0.7 |
| 32 | 15/18.5/22 | F1 | 4 | OS32FB22F1N1 | 1SCA109003R1001 | 1 | 0.9 |
| 32 | 15/18.5/22 | A2, A3 | 3 | OS32GB12P | 1SCA115331R1001 | 1 | 1.3 |
| 32 | 15/18.5/22 | A2, A3 | 4 | OS32GB22N1P | 1SCA115345R1001 | 1 | 1.6 |
| 63 | 30/37/55 | A2, A3 | 3 | OS63GB12P | 1SCA115325R1001 | 1 | 1.3 |
| 63 | 30/37/55 | A2, A3 | 4 | OS63GB22N1P | 1SCA114601R1001 | 1 | 1.6 |
| Terminal bolt kit | | | | | | | |
| 100 | 55/55/90 | A2, A3, A4[1)] | 3 | OS100GB12P | 1SCA114586R1001 | 1 | 1.5 |
| 100 | 55/55/90 | A2, A3, A4[1)] | 4 | OS100GB22N1P | 1SCA114602R1001 | 1 | 1.8 |
| 125 | 55/75/110 | A2, A3, A4[1)] | 3 | OS125GB12P | 1SCA114603R1001 | 1 | 1.5 |
| 125 | 55/75/110 | A2, A3, A4[1)] | 4 | OS125GB22N1P | 1SCA115903R1001 | 1 | 1.8 |
| 160 | 75/90/132 | A2, A3, A4[1)] | 3 | OS160GB12P | 1SCA115637R1001 | 1 | 1.5 |
| 160 | 75/90/132 | A2, A3, A4[1)] | 4 | OS160GB22N1P | 1SCA115899R1001 | 1 | 1.8 |
| **Mechanism at the end of the switch fuse** | | | | | | | |
| Protected tunnel terminals, IP20 | | | | | | | |
| 32 | 15/18.5/22 | A2, A3 | 3 | OS32GB03P | 1SCA115259R1001 | 1 | 1.3 |
| 32 | 15/18.5/22 | A2, A3 | 4 | OS32GB04N1P | 1SCA114610R1001 | 1 | 1.6 |
| 63 | 30/37/55 | A2, A3 | 3 | OS63GB03P | 1SCA115235R1001 | 1 | 1.3 |
| 63 | 30/37/55 | A2, A3 | 4 | OS63GB04N1P | 1SCA115238R1001 | 1 | 1.6 |
| Terminal bolt kit | | | | | | | |
| 100 | 55/55/90 | A2, A3, A4[1)] | 3 | OS100GB03P | 1SCA114613R1001 | 1 | 1.5 |
| 100 | 55/55/90 | A2, A3, A4[1)] | 4 | OS100GB04N1P | 1SCA114614R1001 | 1 | 1.8 |
| 125 | 55/75/110 | A2, A3, A4[1)] | 3 | OS125GB03P | 1SCA115634R1001 | 1 | 1.5 |
| 125 | 55/75/110 | A2, A3, A4[1)] | 4 | OS125GB04N1P | 1SCA115901R1001 | 1 | 1.8 |
| 160 | 75/90/132 | A2, A3, A4[1)] | 3 | OS160GB03P | 1SCA115413R1001 | 1 | 1.5 |
| 160 | 75/90/132 | A2, A3, A4[1)] | 4 | OS160GB04N1P | 1SCA115896R1001 | 1 | 1.8 |

## Shafts and handles included as standard

| Suitable for switches | Included shaft | Included handle | Included terminal bolts |
|---|---|---|---|
| OS20...32FB_ (OS Mini) | OXP6X150 | OHB65J6 | |
| OS32G...63G_P | OXP6X161 | OHB45J6 | |
| OS100G...160G_P | OXP6X161 | OHB65J6 | M8X25 |

N1 = Non-fused switched neutral on the left side

[1)] Max. fuse diameter 32 mm

# Switch fuses, BS -types
# Ordering information


S01622A

OS200B03P


S01623A

OS200B04P


S01622A

OS250B03P


S01835A

OS400B03P


KE00036

OS800B03P


S04013

OS1250B03P

## Front operated switch fuses

Including terminal bolt kit, a black ON-OFF plastic handle and shaft as standard. The handle is IP65 protected, padlockable in the OFF-position and with door interlock in the ON-position. The shaft is adjustable for a range of installation depths.

| Rated current AC-20...23 ≤ 690V [A] | Rated power AC-23 415/500/690V [kW] | Fuse size | Number of poles | Type | Order number | Units/ type [pcs] | Weight [kg] |
|---|---|---|---|---|---|---|---|
| **Mechanism between the poles** | | | | | | | |
| 200 | 110/132/200 | B1-B2 | 3 | OS200B12P | 1SCA022721R3210 | 1 | 3.3 |
| 200 | 110/132/200 | B1-B2 | 4 | OS200B22N2P | 1SCA022721R3300 | 1 | 4.2 |
| 250 | 145/170/250 | B1-B3 | 3 | OS250B12P | 1SCA022778R9860 | 1 | 4.3 |
| 250 | 145/170/250 | B1-B3 | 4 | OS250B22N2P | 1SCA022778R9940 | 1 | 5.1 |
| 315 | 180/220/315 | B1-B4 | 3 | OS315B12P | 1SCA022753R2310 | 1 | 7.1 |
| 315 | 180/220/315 | B1-B4 | 4 | OS315B22N2P | 1SCA022753R3390 | 1 | 9.1 |
| 400 | 230/280/400 | B1-B4 | 3 | OS400B12P | 1SCA022753R3470 | 1 | 7.1 |
| 400 | 230/280/400 | B1-B4 | 4 | OS400B22N2P | 1SCA022753R7200 | 1 | 9.1 |
| 630 | 355/450/630 | C1-C2 | 3 | OS630B12P | 1SCA022825R6400 | 1 | 13.6 |
| 630 | 355/450/630 | C1-C2 | 4 | OS630B22N2P | 1SCA022825R6660 | 1 | 16.9 |
| 800 | 450/560/710 | C1-C3 | 3 | OS800B12P | 1SCA022825R8280 | 1 | 13.6 |
| 800 | 450/560/710 | C1-C3 | 4 | OS800B22N2P | 1SCA022825R8440 | 1 | 16.9 |
| 1250A[1] 1000A[2] | 560/710/1000 | D1 | 3 | OS1250B12P | 1SCA105470R1001 | 1 | 46 |
| 1250A[1] 1000A[2] | 560/710/1000 | D1 | 4 | OS1250B22N2P | 1SCA107937R1001 | 1 | 55 |
| **Mechanism at the end of the switch fuse** | | | | | | | |
| 200 | 110/132/200 | B1-B2 | 3 | OS200B03P | 1SCA022709R9330 | 1 | 3.3 |
| 200 | 110/132/200 | B1-B2 | 3+N[3] | OS200B03N3P | 1SCA022750R0620 | 1 | 3.4 |
| 200 | 110/132/200 | B1-B2 | 4 | OS200B04N2P | 1SCA022709R9410 | 1 | 4.2 |
| 250 | 145/170/250 | B1-B3 | 3 | OS250B03P | 1SCA022750R6660 | 1 | 4.3 |
| 250 | 145/170/250 | B1-B3 | 3+N[3] | OS250B03N3P | 1SCA022750R8010 | 1 | 4.4 |
| 250 | 145/170/250 | B1-B3 | 4 | OS250B04N2P | 1SCA022750R7800 | 1 | 5.1 |
| 315 | 180/220/315 | B1-B4 | 3 | OS315B03P | 1SCA022719R0680 | 1 | 7.1 |
| 315 | 180/220/315 | B1-B4 | 3+N[3] | OS315B03N3P | 1SCA022753R8940 | 1 | 7.5 |
| 315 | 180/220/315 | B1-B4 | 4 | OS315B04N2P | 1SCA022719R2710 | 1 | 9.1 |
| 400 | 230/280/400 | B1-B4 | 3 | OS400B03P | 1SCA022719R0840 | 1 | 7.1 |
| 400 | 230/280/400 | B1-B4 | 3+N[3] | OS400B03N3P | 1SCA022753R9160 | 1 | 7.5 |
| 400 | 230/280/400 | B1-B4 | 4 | OS400B04N2P | 1SCA022719R2890 | 1 | 9.1 |
| 630 | 355/450/630 | C1-C2 | 3 | OS630B03P | 1SCA022825R5850 | 1 | 13.6 |
| 630 | 355/450/630 | C1-C2 | 3+N[3] | OS630B03N3P | 1SCA100860R1001 | 1 | 14.5 |
| 630 | 355/450/630 | C1-C2 | 4 | OS630B04N2P | 1SCA022825R6230 | 1 | 16.9 |
| 800 | 450/560/710 | C1-C3 | 3 | OS800B03P | 1SCA022825R7550 | 1 | 13.6 |
| 800 | 450/560/710 | C1-C3 | 3+N[3] | OS800B03N3P | 1SCA100861R1001 | 1 | 14.5 |
| 800 | 450/560/710 | C1-C3 | 4 | OS800B04N2P | 1SCA022825R8010 | 1 | 16.9 |
| 1250A[1] 1000A[2] | 560/710/1000 | D1 | 3 | OS1250B03P | 1SCA105250R1001 | 1 | 46 |
| 1250A[1] 1000A[2] | 560/710/1000 | D1 | 3+N[3] | OS1250B03N3P | 1SCA107936R1001 | 1 | 47 |
| 1250A[1] 1000A[2] | 560/710/1000 | D1 | 4 | OS1250B04N2P | 1SCA105469R1001 | 1 | 55 |

## Shafts and handles included as standard

| Suitable for switches | Included shaft | Included handle | Included terminal bolts |
|---|---|---|---|
| OS200_P | OXP6X210 | OHB65J6 | M8X25 |
| OS250_P | OXP6X210 | OHB65J6 | M10X30 |
| OS315...400_P | OXP12X250 | OHB95J12 | M10X30 |
| OS630...800_P | OXP12X280 | OHB145J12 | M12X40 |
| OS1250_P | OXP12X395 | OHB200J12P | M12X50 |

N2 = Non-fused switched neutral on the right side
N3 = Include a detachable neutral link integrated into the mechanism.

[1] AC-20...22
[2] AC-23
[3] Include a detachable neutral link integrated into the mechanism

S07002

OS32G...63GB03K

S07003

OS100G...160GB03K

S02013A

OS250B03K

## Front operated switch fuses with direct mounted handle

Including a black Test-OFF-ON plastic handle and shaft as standard. The handle is padlockable in the OFF-position.

| Rated current AC-20…23 ≤ 690V [A] | Rated power AC-23 415/500/690V [kW] | Fuse size | Number of poles | Type | Order number | Units/ type [pcs] | Weight [kg] |
|---|---|---|---|---|---|---|---|
| Protected tunnel terminals, IP20 | | | | | | | |
| 32 | 15/18.5/22 | A2, A3 | 3 | OS32GB03K | 1SCA116744R1001 | 1 | 1.3 |
| 32 | 15/18.5/22 | A2, A3 | 4 | OS32GB04N1K | 1SCA116856R1001 | 1 | 1.6 |
| 63 | 30/37/55 | A2, A3 | 3 | OS63GB03K | 1SCA116745R1001 | 1 | 1.3 |
| 63 | 30/37/55 | A2, A3 | 4 | OS63GB04N1K | 1SCA116746R1001 | 1 | 1.6 |
| Terminal bolt kit | | | | | | | |
| 100 | 55/55/90 | A2, A3, A4[3] | 3 | OS100GB03K | 1SCA116747R1001 | 1 | 1.5 |
| 100 | 55/55/90 | A2, A3, A4[3] | 4 | OS100GB04N1K | 1SCA116748R1001 | 1 | 1.8 |
| 125 | 55/75/110 | A2, A3, A4[3] | 3 | OS125GB03K | 1SCA116751R1001 | 1 | 1.5 |
| 125 | 55/75/110 | A2, A3, A4[3] | 4 | OS125GB04N1K | 1SCA116752R1001 | 1 | 1.8 |
| 160 | 75/90/132 | A2, A3, A4[3] | 3 | OS160GB03K | 1SCA116753R1001 | 1 | 1.5 |
| 160 | 75/90/132 | A2, A3, A4[3] | 4 | OS160GB04N1K | 1SCA116754R1001 | 1 | 1.8 |
| 200 | 110/132/200 | B1-B2 | 3 | OS200B03K | 1SCA022763R6950 | 1 | 3.3 |
| 200 | 110/132/200 | B1-B2 | 4 | OS200B04N2K | 1SCA022763R7090 | 1 | 4.2 |
| 250 | 145/170/250 | B1-B3 | 3 | OS250B03K | 1SCA022763R6010 | 1 | 4.3 |
| 250 | 145/170/250 | B1-B3 | 4 | OS250B04N2K | 1SCA022763R6280 | 1 | 5.1 |
| 315 | 180/220/315 | B1-B4 | 3 | OS315B03K | 1SCA022763R6520 | 1 | 7.0 |
| 315 | 180/220/315 | B1-B4 | 4 | OS315B04N2K | 1SCA022763R6610 | 1 | 9.0 |
| 400 | 230/280/400 | B1-B4 | 3 | OS400B03K | 1SCA022763R6790 | 1 | 7.0 |
| 400 | 230/280/400 | B1-B4 | 4 | OS400B04N2K | 1SCA022763R6870 | 1 | 9.0 |
| 630 | 355/450/630 | C1-C2 | 3 | OS630B03K | 1SCA108708R1001 | 1 | 13 |
| 630 | 355/450/630 | C1-C2 | 4 | OS630B04N2K | 1SCA108710R1001 | 1 | 16 |
| 800 | 450/560/710 | C1-C3 | 3 | OS800B03K | 1SCA108713R1001 | 1 | 13 |
| 800 | 450/560/710 | C1-C3 | 4 | OS800B04N2K | 1SCA108714R1001 | 1 | 16 |
| 1250A[1] 1000A[2] | 560/710/1000 | D1 | 3 | OS1250B03K | 1SCA108715R1001 | 1 | 45 |
| 1250A[1] 1000A[2] | 560/710/1000 | D1 | 4 | OS1250B04N2K | 1SCA108717R1001 | 1 | 54 |

## Shafts and handles included as standard

| Suitable for switches | Included handle and shaft kit | Included terminal bolts |
|---|---|---|
| OS32G...63G_K | OSV200BK | |
| OS100G...160G_K | OSV200BK | M8X25 |
| OS200_K | OSV200BK | M8X25 |
| OS250_K | OSV250DK | M10X30 |
| OS315…400_K | OSV400BK | M10X30 |
| OS630...800_K | OSV800DK | M12X40 |
| OS1250_K | OSV1250DK | M12x50 |

N1 = Non-fused switched neutral on the left side
N2 = Non-fused switched neutral on the right side

[1] AC-20…22
[2] AC-23
[3] Max. fuse diameter 32 mm


S01133A

(OS Mini)
OS25...32FF1210


S07000

OS50GF12P

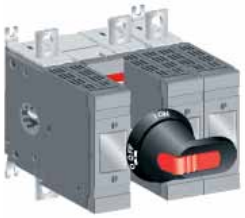
S07001

OS125GF12P


A04172

OS50GF03P


A04173

OS125GF03P

## Front operated switch fuses

Including terminal bolt kit in OS125G, a black ON-OFF plastic handle and shaft as standard. The handle is IP65 protected, padlockable in the OFF-position and with door interlock in the ON-position. The shaft is adjustable for a range of installation depths.

| Rated current AC-20...23 ≤ 690V [A] | Rated power AC-23 400/500/690V [kW] | Fuse size | Number of poles | Type | Order number | Units/ type [pcs] | Weight [kg] |
|---|---|---|---|---|---|---|---|
| **Mechanism between the poles** | | | | | | | |
| Protected tunnel terminals, IP20. | | | | | | | |
| 25 | 11/15/22 | 10x38 | 3 | OS25FF1210 | 1SCA108636R1001 | 1 | 0.7 |
| 25 | 11/15/22 | 10x38 | 4 | OS25FF2210N1 | 1SCA108638R1001 | 1 | 0.9 |
| 25 | 11/15/22 | 10x38 | 4 | OS25FF2210F | 1SCA108637R1001 | 1 | 0.9 |
| 32 | 15/18.5/22 | 14x51 | 3 | OS32FF1214 | 1SCA108642R1001 | 1 | 0.7 |
| 32 | 15/18.5/22 | 14x51 | 4 | OS32FF2214N1 | 1SCA108645R1001 | 1 | 0.9 |
| 32 | 15/18.5/22 | 14x51 | 4 | OS32FF2214F | 1SCA108643R1001 | 1 | 0.9 |
| 50 | 22/30/37 | 14x51 | 3 | OS50GF12P | 1SCA115553R1001 | 1 | 1.3 |
| 50 | 22/30/37 | 14x51 | 4 | OS50GF22N1P | 1SCA114622R1001 | 1 | 1.6 |
| 50 | 22/30/37 | 14x51 | 4 | OS50GF22FP | 1SCA114623R1001 | 1 | 1.6 |
| Terminal bolt kit | | | | | | | |
| 125 | 55/75/110 | 22x58 | 3 | OS125GF12P | 1SCA114624R1001 | 1 | 1.5 |
| 125 | 55/75/110 | 22x58 | 4 | OS125GF22N1P | 1SCA115893R1001 | 1 | 1.8 |
| 125 | 55/75/110 | 22x58 | 4 | OS125GF22FP | 1SCA115614R1001 | 1 | 1.8 |
| **Mechanism at the end of the switch fuse** | | | | | | | |
| Protected tunnel terminals, IP20 | | | | | | | |
| 50 | 22/30/37 | 14x51 | 3 | OS50GF03P | 1SCA115492R1001 | 1 | 1.3 |
| 50 | 22/30/37 | 14x51 | 4 | OS50GF04N1P | 1SCA115495R1001 | 1 | 1.6 |
| 50 | 22/30/37 | 14x51 | 4 | OS50GF04FP | 1SCA115498R1001 | 1 | 1.6 |
| Terminal bolt kit | | | | | | | |
| 125 | 55/75/110 | 22x58 | 3 | OS125GF03P | 1SCA115602R1001 | 1 | 1.5 |
| 125 | 55/75/110 | 22x58 | 4 | OS125GF04N1P | 1SCA115888R1001 | 1 | 1.8 |
| 125 | 55/75/110 | 22x58 | 4 | OS125GF04FP | 1SCA115606R1001 | 1 | 1.8 |

## Shafts and handles included as standard

| Suitable for switches | Included shaft | Included handle | Included terminal bolts |
|---|---|---|---|
| OS25...32_ | OXP6X150 | OHB65J6 | |
| OS50G_P | OXP6X161 | OHB45J6 | |
| OS125G_P | OXP6X161 | OHB65J6 | M8X25 |

F = Fused switched neutral
N1 = Non-fused switched neutral on the left side




(OS Mini)
OS16...35FD12_




(OS Mini)
OS30FA_




OS60GJ12P




OS100GJ12P




OS60GJ03P

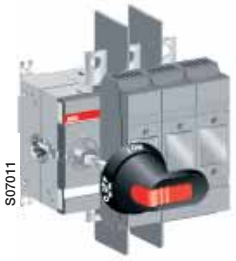


OS100GJ03P

## Front operated switch fuses, Neozed -types

Including a black ON-OFF plastic handle and shaft as standard. The handle is IP65 protected, padlockable in the OFF-position and with door interlock in the ON-position. The shaft is adjustable for a range of installation depths.

| Rated current AC-20...23 ≤ 690V [A] | Rated power AC-23 400/500/690V [kW] | Fuse size | Number of poles | Type | Order number | Units/ type [pcs] | Weight [kg] |
|---|---|---|---|---|---|---|---|
| **Mechanism between the poles** | | | | | | | |
| Protected tunnel terminals, IP20. | | | | | | | |
| 16 | 7.5/7.5/11 | DO1[1)] | 3 | OS16FD1201 | 1SCA108788R1001 | 1 | 0.7 |
| 16 | 7.5/7.5/11 | DO1[1)] | 4 | OS16FD2201N1 | 1SCA108789R1001 | 1 | 0.9 |
| 16 | 7.5/7.5/11 | DO1[1)] | 4 | OS16FD2201F | 1SCA108993R1001 | 1 | 0.9 |
| 35 | 15/22/30 | DO2[1)] | 3 | OS35FD1202 | 1SCA108908R1001 | 1 | 0.7 |
| 35 | 15/22/30 | DO2[1)] | 4 | OS35FD2202N1 | 1SCA108911R1001 | 1 | 0.9 |
| 35 | 15/22/30 | DO2[1)] | 4 | OS35FD2202F | 1SCA109008R1001 | 1 | 0.9 |

## Front operated fusible disconnect switches, UL- and CSA-types

Including terminal bolt set (OS100G), a black ON-OFF plastic handle and shaft as standard. The handle is The handle is IP65, NEMA 1, 3R, 12 protected, padlockable in the OFF-position and with door interlock in the ON-position.
The shaft is adjustable for a range of installation depths. Fuse standard UL 198C.

| Ampere rating [A] | Horse power ratings 3 phase 240/480/600V [HP] | Fuse type, size | Number of poles | Type | Order number | Units/ type [pcs] | Weight [kg] |
|---|---|---|---|---|---|---|---|
| **Mechanism between the poles** | | | | | | | |
| Protected tunnel terminals, IP20, cable size 0.5…10 mm$^2$, (AWG 18 - 8). | | | | | | | |
| 30 | 7.5/15/20 | CC, 30A | 3 | OS30FACC12P | 1SCA108817R1001 | 1 | 0.7 |
| 30 | 7.5/15/20 | CC, 30A | 4 | OS30FACC22FP | 1SCA108821R1001 | 1 | 0.9 |
| 30 | 7.5/15/20 | J, 30A | 3 | OS30FAJ12P | 1SCA108828R1001 | 1 | 0.7 |
| 30 | 7.5/15/20 | J, 30A | 4 | OS30FAJ22FP | 1SCA108831R1001 | 1 | 0.9 |
| Protected tunnel terminals, IP20, cable size 2.5…25 mm (AWG 14 - 4). | | | | | | | |
| 60 | 15/30/50 | J, 60A | 3 | OS60GJ12P | 1SCA115449R1001 | 1 | 1.3 |
| 60 | 15/30/50 | J, 60A | 4 | OS60GJ22N1P | 1SCA116735R1001 | 1 | 1.6 |
| 60 | 15/30/50 | J, 60A | 4 | OS60GJ22FP | 1SCA115469R1001 | 1 | 1.6 |
| Terminal bolt kit | | | | | | | |
| 100 | 30/60/75 | J, 100A | 3 | OS100GJ12P | 1SCA115666R1001 | 1 | 1.5 |
| 100 | 30/60/75 | J, 100A | 4 | OS100GJ22N1P | 1SCA115910R1001 | 1 | 1.8 |
| 100 | 30/60/75 | J, 100A | 4 | OS100GJ22FP | 1SCA114636R1001 | 1 | 1.8 |
| **Mechanism at the end of the switch fuse** | | | | | | | |
| Protected tunnel terminals, IP20, cable size 2.5…25 mm (AWG 14 - 4). | | | | | | | |
| 60 | 15/30/50 | J, 60A | 3 | OS60GJ03P | 1SCA115443R1001 | 1 | 1.3 |
| 60 | 15/30/50 | J, 60A | 4 | OS60GJ04N1P | 1SCA116736R1001 | 1 | 1.6 |
| 60 | 15/30/50 | J, 60A | 4 | OS60GJ04FP | 1SCA115446R1001 | 1 | 1.6 |
| Terminal bolt kit | | | | | | | |
| 100 | 30/60/75 | J, 100A | 3 | OS100GJ03P | 1SCA114639R1001 | 1 | 1.5 |
| 100 | 30/60/75 | J, 100A | 4 | OS100GJ04N1P | 1SCA115909R1001 | 1 | 1.8 |
| 100 | 30/60/75 | J, 100A | 4 | OS100GJ04FP | 1SCA115439R1001 | 1 | 1.8 |

## Shafts and handles included as standard

| Suitable for switches | Included shaft | Included handle | Included terminal bolts |
|---|---|---|---|
| OS16…35FD_ | OXP6X150 | OHB65J6 | |
| OS30FA_ | OXP6X150 | OHB65J6 | |
| OS60G_P | OXP6X161 | OHB45J6 | |
| OS100G_P | OXP6X161 | OHB65J6 | M8X25 |

F = Fused switched neutral
N1 = Non-fused switched neutral on the left side

[1)] Use DO2 adapter rings.




OS200J03_

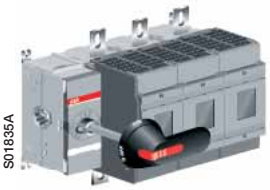


OS400J03_




OS600...800J/L03_




OS1200L03_

## Front operated fusible disconnect switches

Including terminal bolt kit, a black ON-OFF plastic handle and shaft as standard. The handle is The handle is IP65, NEMA 1, 3R, 12 protected, padlockable in the OFF-position and with door interlock in the ON-position. The shaft is adjustable for a range of installation depths. Fuse standards UL 198C.

| Ampere rating [A] | Horsepower rating, [HP] 240/480/600V | Number of poles | Type[1)] | Order number | Units/ type [pcs] | Weight [kg] |
|---|---|---|---|---|---|---|
| 200 | 60/125/150 | 3 | OS200J03P | 1SCA022709R9760 | 1 | 3.3 |
| 400 | 125/250/350 | 3 | OS400J03P | 1SCA022719R1140 | 1 | 7.3 |
| 600 | 200/400/500 | 3 | OS600J03P | 1SCA022825R8870 | 1 | 13.5 |
| 800 | 250/500/500 | 3 | OS800L03P | 1SCA022825R9920 | 1 | 13.5 |
| 1200 | | 3 | OS1200L03P | 1SCA105468R1001 | 1 | 46 |

## Shafts and handles included as standard

| Suitable for switches | Included shaft | Included handle | Included terminal bolts |
|---|---|---|---|
| OS200 | OXP6X210 | OHB65J6 | M8X25 |
| OS400 | OXP12X250 | OHB95J12 | M10X30 |
| OS600...800 | OXP12X280 | OHB145J12 | M12X40 |
| OS1200 | OXP12X395 | OHB200J12P | M12X50 |

[1)] The switch types suitable for fuses: L: Class L (HRC-L) 600 V fuses, J: Class J 600 V fuses. Information on CSA and UL approval on request.


S01384A

(OS Mini)
OS40FDS_


S07009

OS32G_...63GDS30K


S07010

OS100G_...160GDS30K

## Side operated switch fuses

Including terminal bolt kit (OS125G...160G), a black ON-OFF plastic handle and shaft as standard. The handle is IP65 protected, padlockable in the OFF-position and with door interlock in the ON-position. The shaft is adjustable for a range of installation depths.

| Rated current AC-20...23 ≤ 690V [A] | Rated power AC-23 400/500/690V [kW] | Fuse size | Number of poles | Type | Order number | Units/ type [pcs] | Weight [kg] |
|---|---|---|---|---|---|---|---|
| Shaft mounting depths measured from the left side of the switch, 3-pole: H=157…164 mm and 4-pole: H= 193…200 mm. Protected tunnel terminals, IP20. | | | | | | | |
| 40 | 18.5/22/30 | 000 | 3 | OS40FDS30000 | 1SCA108942R1001 | 1 | 0.9 |
| 40 | 18.5/22/30 | 000 | 3[1)] | OS40FDS30000-N | 1SCA109012R1001 | 1 | 0.9 |
| 40 | 18.5/22/30 | 000 | 4 | OS40FDS40000N1 | 1SCA108954R1001 | 1 | 1.1 |

## Side operated switch fuses without handle

| | | | | | | | |
|---|---|---|---|---|---|---|---|
| Protected tunnel terminals, IP20. | | | | | | | |
| 32 | 15/18.5/22 | 000 | 3 | OS32GDS30 | 1SCA115963R1001 | 1 | 1.3 |
| 32 | 15/18.5/22 | 000 | 4 | OS32GDS40N2 | 1SCA116046R1001 | 1 | 1.6 |
| 32 | 15/18.5/22 | 000 | 4 | OS32GDS40F | 1SCA116755R1001 | 1 | 1.6 |
| 63 | 30/37/55 | 000 | 3 | OS63GDS30 | 1SCA116007R1001 | 1 | 1.3 |
| 63 | 30/37/55 | 000 | 4 | OS63GDS40N2 | 1SCA116047R1001 | 1 | 1.6 |
| 63 | 30/37/55 | 000 | 4 | OS63GDS40F | 1SCA116877R1001 | 1 | 1.6 |
| Terminal bolt kit | | | | | | | |
| 125 | 55/75/110 | 000, 00 | 3 | OS125GDS30 | 1SCA115966R1001 | 1 | 1.5 |
| 125 | 55/75/110 | 000, 00 | 4 | OS125GDS40N2 | 1SCA115967R1001 | 1 | 1.8 |
| 125 | 55/75/110 | 000, 00 | 4 | OS125GDS40F | 1SCA116756R1001 | 1 | 1.8 |
| 160 | 75/90/132 | 000, 00 | 3 | OS160GDS30 | 1SCA115968R1001 | 1 | 1.5 |
| 160 | 75/90/132 | 000, 00 | 4 | OS160GDS40N2 | 1SCA115969R1001 | 1 | 1.8 |
| 160 | 75/90/132 | 000, 00 | 4 | OS160GDS40F | 1SCA116757R1001 | 1 | 1.8 |

## Side operated switch fuses with direct mounted handle

Including a black Test-ON-OFF plastic handle and shaft as standard. The handle is padlockable in the OFF-position.

| | | | | | | | |
|---|---|---|---|---|---|---|---|
| Protected tunnel terminals, IP20. | | | | | | | |
| 32 | 15/18.5/22 | 000 | 3 | OS32GDS30K | 1SCA115929R1001 | 1 | 1.3 |
| 32 | 15/18.5/22 | 000 | 4 | OS32GDS40N1K | 1SCA115930R1001 | 1 | 1.6 |
| 32 | 15/18.5/22 | 000 | 4 | OS32GDS40N2K | 1SCA116402R1001 | 1 | 1.6 |
| 63 | 30/37/55 | 000 | 3 | OS63GDS30K | 1SCA115931R1001 | 1 | 1.3 |
| 63 | 30/37/55 | 000 | 4 | OS63GDS40N1K | 1SCA115932R1001 | 1 | 1.6 |
| 63 | 30/37/55 | 000 | 4 | OS63GDS40N2K | 1SCA116403R1001 | 1 | 1.6 |
| Terminal bolt kit | | | | | | | |
| 125 | 55/75/110 | 000, 00 | 3 | OS125GDS30K | 1SCA115933R1001 | 1 | 1.5 |
| 125 | 55/75/110 | 000, 00 | 4 | OS125GDS40N2K | 1SCA115934R1001 | 1 | 1.8 |
| 160 | 75/90/132 | 000, 00 | 3 | OS160GDS30K | 1SCA115935R1001 | 1 | 1.5 |
| 160 | 75/90/132 | 000, 00 | 4 | OS160GDS40N2K | 1SCA115939R1001 | 1 | 1.8 |

## Shafts and handles included as standard

| Suitable for switches | Included shaft | Included handle | Included terminal bolts |
|---|---|---|---|
| OS40FDS_ | OXP6X70-V0 | OHB65J6 | |
| OS32G_S_K...63G_S_K | OXP6X42-TO | OHB65D6 | |
| OS125G_S_K...160G_S_K | OXP6X42-TO | OHB65D6 | M8X25 |

F = Fused switched neutral
N1 = Non-fused switched neutral on the left side
N2 = Non-fused switched neutral on the right side

[1)] Detachable neutral link


KE00074

OS200DS03


KE00075

OS200DS03K

## Side operated switch fuses without handle

Including terminal bolt kit. The handle and shaft have to be ordered separately.

| Rated current AC-20...23 ≤ 690V [A] | Rated power AC-23 400/500/690V [kW] | Fuse size | Number of poles | Type | Order number | Units/ type [pcs] | Weight [kg] |
|---|---|---|---|---|---|---|---|
| 200 | 110/132/200 | 0 | 3 | OS200DS03 | 1SCA022871R0720 | 1 | 3.5 |
| 200 | 110/132/200 | 0 | 3 | OS200DS30 | 1SCA022871R1370 | 1 | 3.5 |
| 200 | 110/132/200 | 0 | 4 | OS200DS04F | 1SCA022871R0990 | 1 | 4.4 |
| 200 | 110/132/200 | 0 | 4 | OS200DS40F | 1SCA022871R1530 | 1 | 4.4 |
| 250 | 145/170/250 | 0-1 | 3 | OS250DS03 | 1SCA022860R3050 | 1 | 4.5 |
| 250 | 145/170/250 | 0-1 | 3 | OS250DS30 | 1SCA022871R2180 | 1 | 4.5 |
| 250 | 145/170/250 | 0-1 | 4 | OS250DS04F | 1SCA022860R3210 | 1 | 5.3 |
| 250 | 145/170/250 | 0-1 | 4 | OS250DS40F | 1SCA022871R2340 | 1 | 5.3 |
| 400 | 230/280/400 | 0-2 | 3 | OS400DS03 | 1SCA022860R3480 | 1 | 7.3 |
| 400 | 230/280/400 | 0-2 | 3 | OS400DS30 | 1SCA022871R2850 | 1 | 7.3 |
| 400 | 230/280/400 | 0-2 | 4 | OS400DS04F | 1SCA022860R3640 | 1 | 9.3 |
| 400 | 230/280/400 | 0-2 | 4 | OS400DS40F | 1SCA022871R3070 | 1 | 9.3 |
| 630 | 355/450/630 | 3 | 3 | OS630DS03 | 1SCA108128R1001 | 1 | 13.9 |
| 630 | 355/450/630 | 3 | 3 | OS630DS30 | 1SCA108135R1001 | 1 | 13.9 |
| 630 | 355/450/630 | 3 | 4 | OS630DS04F | 1SCA108131R1001 | 1 | 16.8 |
| 630 | 355/450/630 | 3 | 4 | OS630DS40F | 1SCA108137R1001 | 1 | 16.8 |
| 800 | 450/560/710 | 3 | 3 | OS800DS03 | 1SCA108092R1001 | 1 | 13.9 |
| 800 | 450/560/710 | 3 | 3 | OS800DS30 | 1SCA108098R1001 | 1 | 13.9 |
| 800 | 450/560/710 | 3 | 4 | OS800DS04F | 1SCA108094R1001 | 1 | 16.8 |
| 800 | 450/560/710 | 3 | 4 | OS800DS40F | 1SCA108100R1001 | 1 | 16.8 |

## Side operated switch fuses with direct mounted handle

Including terminal bolt kit, a black Test-ON-OFF plastic handle and shaft as standard. The handle is padlockable in the OFF-position.

| Rated current AC-20...23 ≤ 690V [A] | Rated power AC-23 400/500/690V [kW] | Fuse size | Number of poles | Type | Order number | Units/ type [pcs] | Weight [kg] |
|---|---|---|---|---|---|---|---|
| 200 | 110/132/200 | 0 | 3 | OS200DS03K | 1SCA022871R0810 | 1 | 3.6 |
| 200 | 110/132/200 | 0 | 3 | OS200DS30K | 1SCA022871R1450 | 1 | 3.6 |
| 200 | 110/132/200 | 0 | 4 | OS200DS04FK | 1SCA022871R1020 | 1 | 4.5 |
| 200 | 110/132/200 | 0 | 4 | OS200DS40FK | 1SCA022871R1610 | 1 | 4.5 |
| 250 | 145/170/250 | 0-1 | 3 | OS250DS03K | 1SCA022860R3130 | 1 | 4.6 |
| 250 | 145/170/250 | 0-1 | 3 | OS250DS30K | 1SCA022871R2260 | 1 | 4.6 |
| 250 | 145/170/250 | 0-1 | 4 | OS250DS04FK | 1SCA022860R3300 | 1 | 5.4 |
| 250 | 145/170/250 | 0-1 | 4 | OS250DS40FK | 1SCA022871R2420 | 1 | 5.4 |
| 400 | 230/280/400 | 0-2 | 3 | OS400DS03K | 1SCA022860R3560 | 1 | 7.5 |
| 400 | 230/280/400 | 0-2 | 3 | OS400DS30K | 1SCA022871R2930 | 1 | 7.5 |
| 400 | 230/280/400 | 0-2 | 4 | OS400DS04FK | 1SCA022860R3720 | 1 | 9.5 |
| 400 | 230/280/400 | 0-2 | 4 | OS400DS40FK | 1SCA022871R3150 | 1 | 9.5 |
| 630 | 355/450/630 | 3 | 3 | OS630DS03K | 1SCA108129R1001 | 1 | 14.1 |
| 630 | 355/450/630 | 3 | 3 | OS630DS30K | 1SCA108136R1001 | 1 | 14.1 |
| 630 | 355/450/630 | 3 | 4 | OS630DS04FK | 1SCA108132R1001 | 1 | 17 |
| 630 | 355/450/630 | 3 | 4 | OS630DS40FK | 1SCA108138R1001 | 1 | 17 |
| 800 | 450/560/710 | 3 | 3 | OS800DS03K | 1SCA108093R1001 | 1 | 14.1 |
| 800 | 450/560/710 | 3 | 3 | OS800DS30K | 1SCA108093R1001 | 1 | 14.1 |
| 800 | 450/560/710 | 3 | 4 | OS800DS04FK | 1SCA108095R1001 | 1 | 17 |
| 800 | 450/560/710 | 3 | 4 | OS800DS40FK | 1SCA108101R1001 | 1 | 17 |

## Shafts and handles included as standard (in -K types):

| Suitable for switches | Included shaft | Included handle | Included terminal bolts |
|---|---|---|---|
| OS200 | OXP6X42-TO | OHB65D6 | M8x25 |
| OS250 | OXP6X42-TO | OHB65D6 | M10x30 |
| OS315...400 | OXP12X47-TO | OHB95D12 | M10x30 |
| OS630…800 | OXP12X59-TO | OHB145D12 | M12x40 |

F = Fused switched neutral


S01146A

(OSMini)
OS20...32FBS30A1
OS32FBS30A2
OS32FBS30F1


S07009

OS32G_...63GBS30K


S07010

OS100G_...160GBS30K

## Side operated switch fuses

Including terminal bolt kit (OS100G...160G), a black ON-OFF plastic handle and shaft as standard. The handle is IP65 protected, padlockable in the OFF-position and with door interlock in the ON-position. The shaft is adjustable for a range of installation depths.

| Rated current AC-20...23 ≤ 690V [A] | Rated power AC-23 415/500/690V [kW] | Fuse size | Number of poles | Type | Order number | Units/ type [pcs] | Weight [kg] |
|---|---|---|---|---|---|---|---|
| Shaft mounting depths measured from the left side of the switch, 3-pole:H=154…166 mm and 4-pole: H= 189…201 mm. Protected tunnel terminals, IP20. | | | | | | | |
| 20 | 7.5/11/15 | A1 | 3 | OS20FBS30A1 | 1SCA108997R1001 | 1 | 0.7 |
| 20 | 7.5/11/15 | A1 | 4 | OS20FBS40A1N1 | 1SCA108998R1001 | 1 | 0.9 |
| 32 | 15/18.5/22 | A1 | 3 | OS32FBS30A1 | 1SCA108877R1001 | 1 | 0.7 |
| 32 | 15/18.5/22 | A1 | 4 | OS32FBS40A1N1 | 1SCA109006R1001 | 1 | 0.9 |
| 32 | 15/18.5/22 | A2 | 3 | OS32FBS30A2 | 1SCA108882R1001 | 1 | 0.7 |
| 32 | 15/18.5/22 | A2 | 4 | OS32FBS40A2N1 | 1SCA109007R1001 | 1 | 0.9 |
| 32 | 15/18.5/22 | F1 | 3 | OS32FBS30F1 | 1SCA109004R1001 | 1 | 0.7 |
| 32 | 15/18.5/22 | F1 | 4 | OS32FBS40F1N1 | 1SCA109005R1001 | 1 | 0.9 |

## Side operated switch fuses without handle

| | | | | | | | |
|---|---|---|---|---|---|---|---|
| Protected tunnel terminals, IP20. | | | | | | | |
| 32 | 15/18.5/22 | A2, A3 | 3 | OS32GBS30 | 1SCA115955R1001 | 1 | 1.3 |
| 32 | 15/18.5/22 | A2, A3 | 4 | OS32GBS40N1 | 1SCA115956R1001 | 1 | 1.6 |
| 63 | 30/37/55 | A2, A3 | 3 | OS63GBS30 | 1SCA115957R1001 | 1 | 1.3 |
| 63 | 30/37/55 | A2, A3 | 4 | OS63GBS40N1 | 1SCA115978R1001 | 1 | 1.6 |
| Terminal bolt kit | | | | | | | |
| 100 | 55/55/90 | A2, A3, A4[1)] | 3 | OS100GBS30 | 1SCA116758R1001 | 1 | 1.5 |
| 100 | 55/55/90 | A2, A3, A4[1)] | 4 | OS100GBS40N1 | 1SCA116759R1001 | 1 | 1.8 |
| 100 | 55/55/90 | A2, A3, A4[1)] | 4 | OS100GBS40N2 | 1SCA116760R1001 | 1 | 1.8 |
| 125 | 55/75/110 | A2, A3, A4[1)] | 3 | OS125GBS30 | 1SCA116048R1001 | | 1.5 |
| 125 | 55/75/110 | A2, A3, A4[1)] | 4 | OS125GBS40N1 | 1SCA115959R1001 | 1 | 1.8 |
| 125 | 55/75/110 | A2, A3, A4[1)] | 4 | OS125GBS40N2 | 1SCA116761R1001 | 1 | 1.8 |
| 160 | 75/90/132 | A2, A3, A4[1)] | 3 | OS160GBS30 | 1SCA115960R1001 | 1 | 1.5 |
| 160 | 75/90/132 | A2, A3, A4[1)] | 4 | OS160GBS40N1 | 1SCA115961R1001 | 1 | 1.8 |
| 160 | 75/90/132 | A2, A3, A4[1)] | 4 | OS160GBS40N2 | 1SCA116762R1001 | 1 | 1.8 |

## Side operated switch fuses with direct mounted handle

Including a black Test-ON-OFF plastic handle and shaft as standard. The handle is padlockable in the OFF-position.

| | | | | | | | |
|---|---|---|---|---|---|---|---|
| Protected tunnel terminals, IP20. | | | | | | | |
| 32 | 15/18.5/22 | A2, A3 | 3 | OS32GBS30K | 1SCA115918R1001 | 1 | 1.3 |
| 32 | 15/18.5/22 | A2, A3 | 4 | OS32GBS40N1K | 1SCA115923R1001 | 1 | 1.6 |
| 63 | 30/37/55 | A2, A3 | 3 | OS63GBS30K | 1SCA115924R1001 | 1 | 1.3 |
| 63 | 30/37/55 | A2, A3 | 4 | OS63GBS40N1K | 1SCA115979R1001 | 1 | 1.6 |
| Terminal bolt kit | | | | | | | |
| 125 | 55/75/110 | A2, A3, A4[1)] | 3 | OS125GBS30K | 1SCA116400R1001 | 1 | 1.5 |
| 125 | 55/75/110 | A2, A3, A4[1)] | 4 | OS125GBS40N1K | 1SCA115926R1001 | 1 | 1.8 |
| 160 | 75/90/132 | A2, A3, A4[1)] | 3 | OS160GBS30K | 1SCA115927R1001 | 1 | 1.5 |
| 160 | 75/90/132 | A2, A3, A4[1)] | 4 | OS160GBS40N1K | 1SCA115928R1001 | 1 | 1.8 |

## Shafts and handles included as standard

| Suitable for switches | Included shaft | Included handle | Included terminal bolts |
|---|---|---|---|
| OS20F_S...32F_S (OS Mini) | OXP6X70-V0 | OHB65J6 | |
| OS32G_S_K...63G_S_K | OXP6X42-TO | OHB65D6 | |
| OS125G_S_K...160G_S_K | OXP6X42-TO | OHB65D6 | M8X25 |

N1 = Non-fused switched neutral on the left side
N2 = Non-fused switched neutral on the right side

[1)] Max. diameter 32 mm


KE00074

OS200BS03


KE00075

OS200BS03K

## Side operated switch fuses without handle

Including terminal bolt kit. The handle and shaft have to be ordered separately.

| Rated current AC-20...23 ≤ 690V [A] | Rated power AC-23 415/500/690V [kW] | Fuse size | Number of poles | Type | Order number | Units/ type [pcs] | Weight [kg] |
|---|---|---|---|---|---|---|---|
| 200 | 110/132/200 | B1-B2 | 3 | OS200BS03 | 1SCA022860R3810 | 1 | 3.5 |
| 200 | 110/132/200 | B1-B2 | 3 | OS200BS30 | 1SCA022870R7770 | 1 | 3.5 |
| 200 | 110/132/200 | B1-B2 | 4 | OS200BS04N2 | 1SCA022870R7510 | 1 | 4.4 |
| 200 | 110/132/200 | B1-B2 | 4 | OS200BS40N2 | 1SCA022870R8150 | 1 | 4.4 |
| 250 | 145/170/250 | B1-B3 | 3 | OS250BS03 | 1SCA022860R4370 | 1 | 4.5 |
| 250 | 145/170/250 | B1-B3 | 3 | OS250BS30 | 1SCA022870R8580 | 1 | 4.5 |
| 250 | 145/170/250 | B1-B3 | 4 | OS250BS04N2 | 1SCA022870R8310 | 1 | 5.3 |
| 250 | 145/170/250 | B1-B3 | 4 | OS250BS40N2 | 1SCA022870R8910 | 1 | 5.3 |
| 315 | 180/220/315 | B1-B4 | 3 | OS315BS03 | 1SCA022860R4700 | 1 | 7.3 |
| 315 | 180/220/315 | B1-B4 | 3 | OS315BS30 | 1SCA022870R9390 | 1 | 7.3 |
| 315 | 180/220/315 | B1-B4 | 4 | OS315BS04N2 | 1SCA022870R9120 | 1 | 9.3 |
| 315 | 180/220/315 | B1-B4 | 4 | OS315BS40N2 | 1SCA022870R9710 | 1 | 9.3 |
| 400 | 230/280/400 | B1-B4 | 3 | OS400BS03 | 1SCA022860R5180 | 1 | 7.3 |
| 400 | 230/280/400 | B1-B4 | 3 | OS400BS30 | 1SCA022871R0130 | 1 | 7.3 |
| 400 | 230/280/400 | B1-B4 | 4 | OS400BS04N2 | 1SCA022870R9980 | 1 | 9.3 |
| 400 | 230/280/400 | B1-B4 | 4 | OS400BS40N2 | 1SCA022871R0560 | 1 | 9.3 |
| 630 | 355/450/630 | C1-C2 | 3 | OS630BS03 | 1SCA108141R1001 | 1 | 13.9 |
| 630 | 355/450/630 | C1-C2 | 3 | OS630BS30 | 1SCA108147R1001 | 1 | 13.9 |
| 630 | 355/450/630 | C1-C2 | 4 | OS630BS04N2 | 1SCA108145R1001 | 1 | 16.8 |
| 630 | 355/450/630 | C1-C2 | 4 | OS630BS40N2 | 1SCA108152R1001 | 1 | 16.8 |
| 800 | 450/560/710 | C1-C3 | 3 | OS800BS03 | 1SCA108076R1001 | 1 | 13.9 |
| 800 | 450/560/710 | C1-C3 | 3 | OS800BS30 | 1SCA108083R1001 | 1 | 13.9 |
| 800 | 450/560/710 | C1-C3 | 4 | OS800BS04N2 | 1SCA108081R1001 | 1 | 16.8 |
| 800 | 450/560/710 | C1-C3 | 4 | OS800BS40N2 | 1SCA108086R1001 | 1 | 16.8 |

## Side operated switch fuses with direct mounted handle

Including terminal bolt kit, a black Test-ON-OFF plastic handle and shaft as standard. The handle is padlockable in the OFF-position.

| Rated current AC-20...23 ≤ 690V [A] | Rated power AC-23 415/500/690V [kW] | Fuse size | Number of poles | Type | Order number | Units/ type [pcs] | Weight [kg] |
|---|---|---|---|---|---|---|---|
| 200 | 110/132/200 | B1-B2 | 3 | OS200BS03K | 1SCA022860R3990 | 1 | 3.6 |
| 200 | 110/132/200 | B1-B2 | 3 | OS200BS30K | 1SCA022870R7850 | 1 | 3.6 |
| 200 | 110/132/200 | B1-B2 | 4 | OS200BS04N2K | 1SCA022870R7690 | 1 | 4.5 |
| 200 | 110/132/200 | B1-B2 | 4 | OS200BS40N2K | 1SCA022870R8230 | 1 | 4.5 |
| 250 | 145/170/250 | B1-B3 | 3 | OS250BS03K | 1SCA022860R4450 | 1 | 4.6 |
| 250 | 145/170/250 | B1-B3 | 3 | OS250BS30K | 1SCA022870R8660 | 1 | 4.6 |
| 250 | 145/170/250 | B1-B3 | 4 | OS250BS04N2K | 1SCA022870R8400 | 1 | 5.4 |
| 250 | 145/170/250 | B1-B3 | 4 | OS250BS40N2K | 1SCA022870R9040 | 1 | 5.4 |
| 315 | 180/220/315 | B1-B4 | 3 | OS315BS03K | 1SCA022860R4880 | 1 | 7.5 |
| 315 | 180/220/315 | B1-B4 | 3 | OS315BS30K | 1SCA022870R9470 | 1 | 7.5 |
| 315 | 180/220/315 | B1-B4 | 4 | OS315BS04N2K | 1SCA022870R9210 | 1 | 9.5 |
| 315 | 180/220/315 | B1-B4 | 4 | OS315BS40N2K | 1SCA022870R9800 | 1 | 9.5 |
| 400 | 230/280/400 | B1-B4 | 3 | OS400BS03K | 1SCA022860R5260 | 1 | 7.5 |
| 400 | 230/280/400 | B1-B4 | 3 | OS400BS30K | 1SCA022871R0210 | 1 | 7.5 |
| 400 | 230/280/400 | B1-B4 | 4 | OS400BS04N2K | 1SCA022871R0050 | 1 | 9.5 |
| 400 | 230/280/400 | B1-B4 | 4 | OS400BS40N2K | 1SCA022871R0640 | 1 | 9.5 |
| 630 | 355/450/630 | C1-C2 | 3 | OS630BS03K | 1SCA108142R1001 | 1 | 14.1 |
| 630 | 355/450/630 | C1-C2 | 3 | OS630BS30K | 1SCA108148R1001 | 1 | 14.1 |
| 630 | 355/450/630 | C1-C2 | 4 | OS630BS04N2K | 1SCA108146R1001 | 1 | 17 |
| 630 | 355/450/630 | C1-C2 | 4 | OS630BS40N2K | 1SCA108151R1001 | 1 | 17 |
| 800 | 450/560/710 | C1-C3 | 3 | OS800BS03K | 1SCA108077R1001 | 1 | 14.1 |
| 800 | 450/560/710 | C1-C3 | 3 | OS800BS30K | 1SCA108084R1001 | 1 | 14.1 |
| 800 | 450/560/710 | C1-C3 | 4 | OS800BS04N2K | 1SCA108082R1001 | 1 | 17 |
| 800 | 450/560/710 | C1-C3 | 4 | OS800BS40N2K | 1SCA108087R1001 | 1 | 17 |

## Shafts and handles included as standard (in -K types):

| Suitable for switches | Included shaft | Included handle | Included terminal bolts |
|---|---|---|---|
| OS200 | OXP6X42-TO | OHB65D6 | M8x25 |
| OS250 | OXP6X42-TO | OHB65D6 | M10x30 |
| OS315...400 | OXP12X47-TO | OHB95D12 | M10x30 |
| OS630...800 | OXP12X59-TO | OHB145D12 | M12x40 |

N2 = Non-fused switched neutral on the right side


S01146A

(OSMini)
OS25...32FFS30_


S07009

OS50GFS30K


S07010

OS125GFS30K

## Side operated switch fuses

Including terminal bolt kit (OS125G), a black ON-OFF plastic handle and shaft as standard. The handle is IP65 protected, Nema type 1, 3R, 12, padlockable in the OFF-position and with door interlock in the ON-position. The shaft is adjustable for a range of installation depths.

| Rated current AC-20...23 ≤ 690V [A] | Rated power AC-23 400/500/690V [kW] | Fuse size | Number of poles | Type | Order number | Units/ type [pcs] | Weight [kg] |
|---|---|---|---|---|---|---|---|
| Shaft mounting depths measured from the left side of the switch, 3-pole: H=154…166 mm and 4 pole: H=189…201 mm. Protected tunnel terminals, IP20. | | | | | | | |
| 25 | 11/15/22 | 10x38 | 3 | OS25FFS3010 | 1SCA108639R1001 | 1 | 0.7 |
| 25 | 11/15/22 | 10x38 | 4 | OS25FFS4010N1 | 1SCA108661R1001 | 1 | 0.9 |
| 25 | 11/15/22 | 10x38 | 4 | OS25FFS4010F | 1SCA108640R1001 | 1 | 0.9 |
| 32 | 15/18.5/22 | 14x51 | 3 | OS32FFS3014 | 1SCA108646R1001 | 1 | 0.7 |
| 32 | 15/18.5/22 | 14x51 | 4 | OS32FFS4014N1 | 1SCA108649R1001 | 1 | 0.9 |
| 32 | 15/18.5/22 | 14x51 | 4 | OS32FFS4014F | 1SCA108647R1001 | 1 | 0.9 |

## Side operated switch fuses without handle

| | | | | | | | |
|---|---|---|---|---|---|---|---|
| Protected tunnel terminals, IP20. | | | | | | | |
| 50 | 22/30/37 | 14x51 | 3 | OS50GFS30 | 1SCA116050R1001 | 1 | 1.3 |
| 50 | 22/30/37 | 14x51 | 4 | OS50GFS40N1 | 1SCA116058R1001 | 1 | 1.6 |
| 50 | 22/30/37 | 14x51 | 4 | OS50GFS40F | 1SCA116014R1001 | 1 | 1.6 |
| Terminal bolt kit | | | | | | | |
| 125 | 55/75/110 | 22x58 | 3 | OS125GFS30 | 1SCA115973R1001 | 1 | 1.5 |
| 125 | 55/75/110 | 22x58 | 4 | OS125GFS40N1 | 1SCA115974R1001 | 1 | 1.8 |
| 125 | 55/75/110 | 22x58 | 4 | OS125GFS40F | 1SCA115975R1001 | 1 | 1.8 |

## Side operated switch fuses with direct mounted handle

Including a black Test-ON-OFF plastic handle and shaft as standard. The handle is padlockable in the OFF-position.

| | | | | | | | |
|---|---|---|---|---|---|---|---|
| Protected tunnel terminals, IP20. | | | | | | | |
| 50 | 22/30/37 | 14x51 | 3 | OS50GFS30K | 1SCA116404R1001 | 1 | 1.3 |
| 50 | 22/30/37 | 14x51 | 4 | OS50GFS40N1K | 1SCA116013R1001 | 1 | 1.6 |
| 50 | 22/30/37 | 14x51 | 4 | OS50GFS40FK | 1SCA116425R1001 | 1 | 1.6 |
| Terminal bolt kit | | | | | | | |
| 125 | 55/75/110 | 22x58 | 3 | OS125GFS30K | 1SCA115944R1001 | 1 | 1.5 |
| 125 | 55/75/110 | 22x58 | 4 | OS125GFS40N1K | 1SCA115945R1001 | 1 | 1.8 |
| 125 | 55/75/110 | 22x58 | 4 | OS125GFS40FK | 1SCA115946R1001 | 1 | 1.8 |

## Shafts and handles included as standard

| Suitable for switches | Included shaft | Included handle | Included terminal bolts |
|---|---|---|---|
| OS25F_S...32F_S (OS Mini) | OXP6X70-V0 | OHB65J6 | |
| OS50GFS_K | OXP6X42-TO | OHB65D6 | |
| OS125GFS_K | OXP6X42-TO | OHB65D6 | M8X25 |

**F = Fused switched neutral**
**N1 = Non-fused switched neutral on the left side**


S01146A

(OSMini)
OS16...35FDS30_


S01146A

(OSMini)
OS30FA_


S07009

OS60GJS30K


S07012

OS100GJS30K

## Side operated switch fuses, Neozed-types

Including a handle and shaft as standard. The handle is IP65 protected, padlockable in the OFF-position and with door interlock in the ON-position. The shaft is adjustable for a range of installation depths.

| Rated current AC-20...23 ≤ 690V [A] | Rated power AC-23 400/500/690V [kW] | Fuse size | Number of poles | Type | Order number | Units/ type [pcs] | Weight [kg] |
|---|---|---|---|---|---|---|---|
| Shaft mounting depths measured from the left side of the switch, 3-pole: H=154…166 mm and 4-pole: H=189…201 mm. Protected tunnel terminals, IP20. | | | | | | | |
| 16 | 7.5/7.5/11 | DO 1[1)] | 3 | OS16FDS3001 | 1SCA108994R1001 | 1 | 0.7 |
| 16 | 7.5/7.5/11 | DO 1[1)] | 4 | OS16FDS4001N1 | 1SCA108995R1001 | 1 | 0.9 |
| 16 | 7.5/7.5/11 | DO 1[1)] | 4 | OS16FDS4001F | 1SCA108996R1001 | 1 | 0.9 |
| 35 | 15/22/30 | DO 2 | 3 | OS35FDS3002 | 1SCA109009R1001 | 1 | 0.7 |
| 35 | 15/22/30 | DO 2 | 4 | OS35FDS4002N1 | 1SCA109010R1001 | 1 | 0.9 |
| 35 | 15/22/30 | DO 2 | 4 | OS35FDS4002F | 1SCA109011R1001 | 1 | 0.9 |

## Side operated fusible disconnect switches, UL- and CSA-types

Including terminal bolt set (OS100G), a black ON-OFF plastic handle and shaft as standard. The handle is IP65 protected, Nema type 1, 3R, 12, padlockable in the OFF-position and with door interlock in the ON-position. The shaft is adjustable for a range of installation depths. Fuse standards UL 198C.

| Ampere rating [A] | Horse power ratings 3 phase 240/480/600V [HP] | Fuse type, size | Number of poles | Type | Order number | Units/ type [pcs] | Weight [kg] |
|---|---|---|---|---|---|---|---|
| Shaft mounting depths measured from the left side of the switch, 3-pole: H=154…166 mm and 4-pole: H= 189…201 mm. Protected tunnel terminals, IP20. | | | | | | | |
| 30 | 7.5/15/20 | CC, 30A | 3 | OS30FACCS30P | 1SCA108999R1001 | 1 | 0.7 |
| 30 | 7.5/15/20 | J, 30A | 3 | OS30FAJS30P | 1SCA108838R1001 | 1 | 0.7 |

## Side operated switch fuses without handle, UL- and CSA-types

| | | | | | | | |
|---|---|---|---|---|---|---|---|
| Protected tunnel terminals, IP20. | | | | | | | |
| 60 | 15/30/50 | J, 60A | 3 | OS60GJS30 | 1SCA116051R1001 | 1 | 1.3 |
| 60 | 15/30/50 | J, 60A | 4 | OS60GJS40N1 | 1SCA116763R1001 | 1 | 1.6 |
| 60 | 15/30/50 | J, 60A | 4 | OS60GJS40F | 1SCA115970R1001 | 1 | 1.6 |
| Terminal bolt kit | | | | | | | |
| 100 | 30/60/75 | J, 100A | 3 | OS100GJS30 | 1SCA115971R1001 | 1 | 1.5 |
| 100 | 30/60/75 | J, 100A | 4 | OS100GJS40N1 | 1SCA116764R1001 | 1 | 1.8 |
| 100 | 30/60/75 | J, 100A | 4 | OS100GJS40N2 | 1SCA116765R1001 | 1 | 1.8 |
| 100 | 30/60/75 | J, 100A | 4 | OS100GJS40F | 1SCA115972R1001 | 1 | 1.8 |

## Side operated switch fuses with direct mounted handle

Including a black Test-ON-OFF plastic handle and shaft as standard. The handle is padlockable in the OFF-position.

| | | | | | | | |
|---|---|---|---|---|---|---|---|
| Protected tunnel terminals, IP20. | | | | | | | |
| 60 | 15/30/50 | J, 60A | 3 | OS60GJS30K | 1SCA116426R1001 | 1 | 1.3 |
| 60 | 15/30/50 | J, 60A | 4 | OS60GJS40FK | 1SCA115941R1001 | 1 | 1.6 |
| Terminal bolt kit | | | | | | | |
| 100 | 30/60/75 | J, 100A | 3 | OS100GJS30K | 1SCA115942R1001 | 1 | 1.5 |
| 100 | 30/60/75 | J, 100A | 4 | OS100GJS40FK | 1SCA115943R1001 | 1 | 1.8 |

## Shafts and handles included as standard

| Suitable for switches | Included shaft | Included handle | Included terminal bolts |
|---|---|---|---|
| OS16...35FD_ , OS30FA_ | OXP6X70-V0 | OHB65J6 | |
| OS60GJS_K | OXP6X42-TO | OHB65D6 | |
| OS100GJS_K | OXP6X42-TO | OHB65D6 | M8X25 |

F = Fused switched neutral
N1 = Non-fused switched neutral on the left side
N2 = Non-fused switched neutral on the right side

[1)] Use Neozed DO2 adaptor ring

# Notes

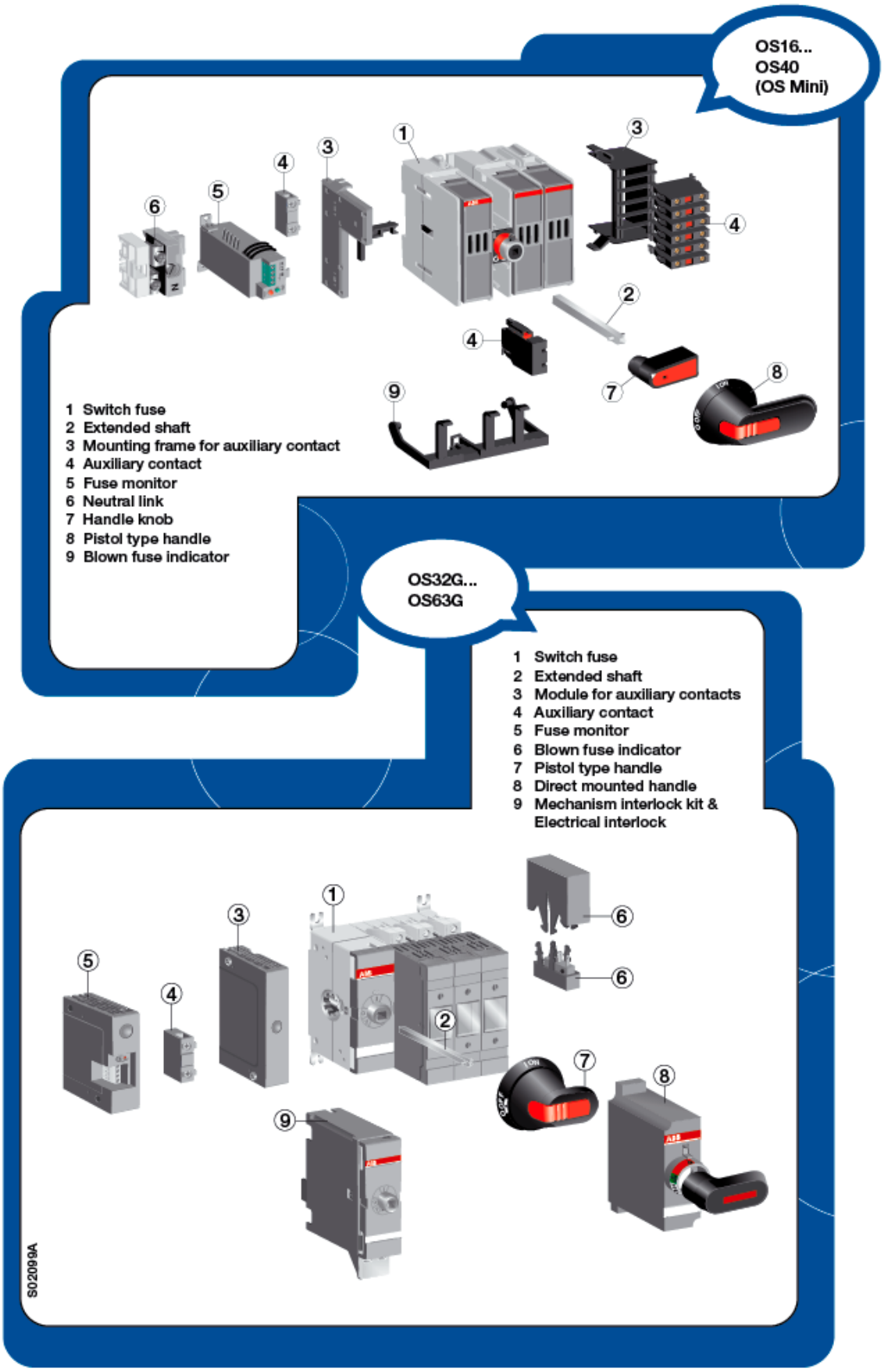
OS16...
OS40
(OS Mini)
1 Switch fuse
2 Extended shaft
3 Mounting frame for auxiliary contact
4 Auxiliary contact
5 Fuse monitor
6 Neutral link
7 Handle knob
8 Pistol type handle
9 Blown fuse indicator
OS32G...
OS63G
1 Switch fuse
2 Extended shaft
3 Module for auxiliary contacts
4 Auxiliary contact
5 Fuse monitor
6 Blown fuse indicator
7 Pistol type handle
8 Direct mounted handle
9 Mechanism interlock kit &
Electrical interlock
S02099A

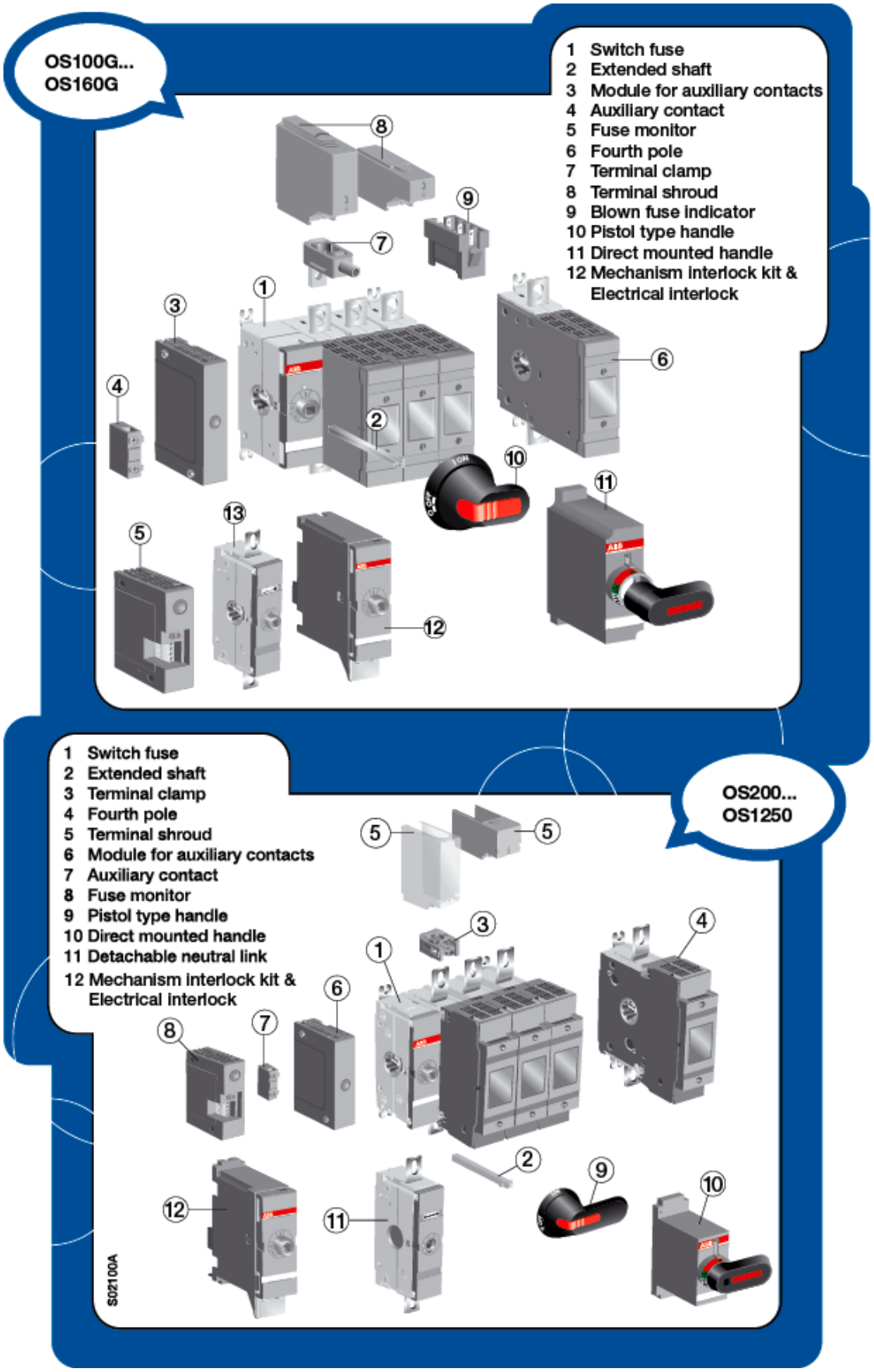
OS100G...
OS160G
1 Switch fuse
2 Extended shaft
3 Module for auxiliary contacts
4 Auxiliary contact
5 Fuse monitor
6 Fourth pole
7 Terminal clamp
8 Terminal shroud
9 Blown fuse indicator
10 Pistol type handle
11 Direct mounted handle
12 Mechanism interlock kit & Electrical interlock
1 Switch fuse
2 Extended shaft
3 Terminal clamp
4 Fourth pole
5 Terminal shroud
6 Module for auxiliary contacts
7 Auxiliary contact
8 Fuse monitor
9 Pistol type handle
10 Direct mounted handle
11 Detachable neutral link
12 Mechanism interlock kit & Electrical interlock
OS200...
OS1250
S02100A


S00601A


S00836A


S01200A

OH_65J_


S00469A

OH_


S02195A

OHB_P


S02140A

OHM_


S00097A

YASDA_

## Optional handles, IP 65, Nema type 1, 3R, 12

### For front operated switch fuses

Padlockable with 3 padlocks in the OFF-position, door interlock in the ON-position. Units/type = 1 pcs. Screw fixing from the back side of the handle, no screws on the front, ensures double protection.

| Colour | Handle length [mm] | Type | Order number | Delivery batch [pcs] | Weight /unit [kg] |
|---|---|---|---|---|---|
| **For shaft diameter 6 mm (for OSMini...250).** | | | | | |
| Plastic handles, black and red-yellow: I-O/ON-OFF, grey: I-O. | | | | | |
| Black | 45 | OHB45J6 | 1SCA022380R8770 | 100 | 0.12 |
| Red-Yellow | 45 | OHY45J6 | 1SCA022380R8930 | 100 | 0.12 |
| Grey | 45 | OHG45J6 | 1SCA022380R8850 | 100 | 0.12 |
| Black | 65 | OHB65J6 | 1SCA022380R9660 | 100 | 0.12 |
| Red-Yellow | 65 | OHY65J6 | 1SCA022380R9820 | 100 | 0.12 |
| Grey | 65 | OHG65J6 | 1SCA022380R9740 | 100 | 0.12 |
| Plastic handles, black and red-yellow: Test/I-O/ON-OFF, grey: Test/I-O. | | | | | |
| Black | 45 | OHB45J6T | 1SCA109870R1001 | 100 | 0.12 |
| Black | 65 | OHB65J6T | 1SCA022399R8110 | 100 | 0.12 |
| Red-Yellow | 65 | OHY65J6T | 1SCA022456R9540 | 100 | 0.12 |
| Grey | 65 | OHG65J6T | 1SCA022456R9620 | 100 | 0.12 |
| Stainless steel handles: I-O/ON-OFF, padlockable with 3 padlocks in the OFF-position, door interlock in the ON-position, IP66 (NEMA 4X) | | | | | |
| Metallic | 65 | OHM65L6 | 1SCA022739R1070 | 1 | 0.73 |
| **For shaft diameter 12 mm (for OS315...400)** Plastic handles, black and red-yellow: I-O/ON-OFF, grey: I-O. | | | | | |
| Black | 95 | OHB95J12 | 1SCA022381R0830 | 90 | 0.16 |
| Red-Yellow | 95 | OHY95J12 | 1SCA022381R1050 | 90 | 0.16 |
| Grey | 95 | OHG95J12 | 1SCA022381R0910 | 90 | 0.16 |
| Indication: Test-OFF-ON/Test-O-I | | | | | |
| Black | 95 | OHB95J12T | 1SCA022736R1750 | 90 | 0.16 |
| Red-Yellow | 95 | OHY95J12T | 1SCA022736R1910 | 90 | 0.16 |
| **For shaft diameter 12 mm (for OS630...800).** Plastic handles, black and red-yellow: I-O/ON-OFF, grey: I-O. | | | | | |
| Black | 125 | OHB125J12 | 1SCA022381R1560 | 90 | 0.16 |
| Red-Yellow | 125 | OHY125J12 | 1SCA022381R1720 | 90 | 0.16 |
| Grey | 125 | OHG125J12 | 1SCA022381R1640 | 90 | 0.16 |
| Black | 145 | OHB145J12 | 1SCA022381R2110 | 90 | 0.17 |
| Red-Yellow | 145 | OHY145J12 | 1SCA022381R2370 | 90 | 0.17 |
| Grey | 145 | OHG145J12 | 1SCA022381R2290 | 90 | 0.17 |
| Black | 175 | OHB175J12 | 1SCA022381R2450 | 90 | 0.18 |
| Red-Yellow | 175 | OHY175J12 | 1SCA022381R2700 | 90 | 0.18 |
| Grey | 175 | OHG175J12 | 1SCA022381R2610 | 90 | 0.18 |
| Indication: Test-OFF-ON/Test-O-I | | | | | |
| Black | 125 | OHB125J12T | 1SCA022652R2220 | 90 | 0.16 |
| Red-Yellow | 125 | OHY125J12T | 1SCA022652R2310 | 90 | 0.16 |
| Black | 145 | OHB145J12T | 1SCA022652R2570 | 90 | 0.17 |
| Red-Yellow | 145 | OHY145J12T | 1SCA022652R2650 | 90 | 0.17 |
| Black | 175 | OHB175J12T | 1SCA022708R0740 | 90 | 0.18 |
| **For shaft diameter 12 mm (for OS1200...1250).** Plastic handles, black and red-yellow: I-O/ON-OFF. | | | | | |
| Black | 2x150 | OHB150J12P | 1SCA022865R9430 | 50 | 0.17 |
| Red-Yellow | 2x150 | OHY150J12P | 1SCA101586R1001 | 50 | 0.17 |
| Black | 2x200 | OHB200J12P | 1SCA022865R9510 | 50 | 0.40 |
| Red-Yellow | 2x200 | OHY200J12P | 1SCA101587R1001 | 50 | 0.40 |
| Indication: Test-OFF-ON/Test-O-I | | | | | |
| Black | 2x200 | OHB200J12PT | 1SCA106510R1001 | 50 | 0.40 |
| Red-Yellow | 2x200 | OHY200J12PT | 1SCA111512R1001 | 50 | 0.40 |
| Stainless steel handles: I-O/ON-OFF, padlockable with 3 padlocks in the OFF-position, door interlock in the ON-position, IP66 (NEMA 4X) | | | | | |
| Metallic | 125 | OHM125L12 | 1SCA022739R1150 | 1 | 0.76 |
| Metallic | 175 | OHM175L12 | 1SCA022739R1230 | 1 | 0.83 |
| Metallic | 275 | OHM275L12 | 1SCA022832R4840 | 1 | 0.96 |
| Metallic handles, padlockable with 3 padlocks in OFF-position, door interlock in the ON-position. | | | | | |
| Black 1-0 | 220 | YASDA 7 | 1SCA022071R3010 | 1 | 0.70 |
| Black ON-OFF | 220 | YASDA 8 | 1SCA022071R3270 | 1 | 0.70 |
| Black I-0 | 320 | YASDA35 | 1SCA104400R1001 | 1 | 0.80 |

- **Door interlocking in the ON-position means that the door cannot be opened, when the handle is in the ON-position. This can be defeated to allow authorized personnel access for inspection.**
- **Handles padlockable in all positions are available on request.**


S00469A
OH_E00S

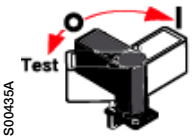

S00435A

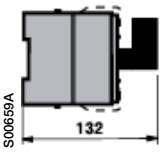

S00659A
OHBS5


S00778A
OHB4

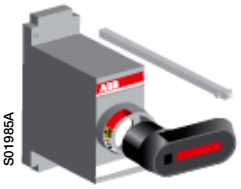
S01985A
OSV_

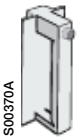
S00370A
OFAE504


S00371A
OFAE505


S02194A
OHZX14

## Optional handles

### For side operated switch fuses, IP 65, Nema type 1, 3R, 12

For mounting on the side of the enclosure. Padlockable with three padlocks in the OFF-position, door interlock in the ON-position, IP 65. The position indications are rotated 90°. If the handle is mounted on the front of the door, a standard handle can be used as well.

| Colour | Handle length [mm] | Type | Order number | Units/ type [pcs] | Weight [kg] |
|---|---|---|---|---|---|
| **For shaft diameter 6 mm** | | | | | |
| Plastic handles, black and red-yellow: I-O/ON-OFF, grey: I-O. | | | | | |
| Black | 65 | OHB65J6E00S | 1SCA022382R9850 | 1 | 0.12 |
| Red-yellow | 65 | OHY65J6E00S | 1SCA022382R9930 | 1 | 0.12 |
| Grey | 65 | OHG65J6E00S | 1SCA022383R4510 | 1 | 0.12 |
| Plastic handles, black and red-yellow: Test/I-O/ON-OFF, grey: Test/I-O. | | | | | |
| Black | 65 | OHB65J6TE00S | 1SCA109016R1001 | 1 | 0.12 |
| Red-yellow | 65 | OHY65J6TE00S | 1SCA022688R0140 | 1 | 0.12 |
| Grey | 65 | OHG65J6TE00S | 1SCA109014R1001 | 1 | 0.12 |
| **For shaft diameter 12 mm** | | | | | |
| Plastic handles, indication I-O/ON-OFF | | | | | |
| Black | 145 | OHB145J12E00S | 1SCA022679R9700 | 1 | 0.17 |

## Direct mounted handles

Plastic handles, panel board handle, can be padlocked in the OFF-position. Includes a special shaft. The handle can also be used with a standard shaft as padlocking device.

### For front operated OS Mini

Indication I-O/ON-OFF/TEST. Handle padlockable with 2 padlocks in the OFF- and Test-positions when the door is open. Max. bail dia 8 mm.

| | | | | |
|---|---|---|---|---|
| Black | OHBS5 | 1SCA109015R1001 | 1 | 0.05 |

### For side operated OS Mini

Padlockable with three padlocks in the OFF- position when the door is open. Max. bail dia 6 mm.

| | | | | |
|---|---|---|---|---|
| Black | OHB4 | 1SCA022439R4050 | 1 | 0.05 |

### For front operated OS 32G...1250

Test OFF-ON/Test O-I indication
Padlockable with three padlocks in the OFF-position, optionally also in the ON-position.
Includes shaft and mechanism cover.

| Suitable for switches | Colour | Type | Order number | Units/ type [pcs] | Weight [kg] |
|---|---|---|---|---|---|
| OS32G...160G, OS200B/J_K | Black | OSV200BK | 1SCA022779R7530 | 1 | 0.14 |
| | Yellow-red | OSVY200BK | 1SCA022779R7700 | 1 | 0.14 |
| OS200D...250D/B_K | Black | OSV250DK | 1SCA022763R3510 | 1 | 0.16 |
| | Yellow-red | OSVY250DK | 1SCA022778R6500 | 1 | 0.16 |
| OS400D_K | Black | OSV400DK | 1SCA022763R4230 | 1 | 0.34 |
| | Yellow-red | OSVY400DK | 1SCA022779R5590 | 1 | 0.34 |
| OS315...400B/J_K | Black | OSV400BK | 1SCA022763R3930 | 1 | 0.33 |
| | Yellow-red | OSVY400BK | 1SCA022779R5830 | 1 | 0.33 |
| OS600...800_K | Black | OSV800DK | 1SCA107794R1001 | 1 | 1.1 |
| | Yellow-red | OSVY800DK | 1SCA108703R1001 | 1 | 1.1 |
| OS1200...OS1250_K | Black | OSV1250DK | 1SCA107797R1001 | 1 | 1.5 |
| | Yellow-red | OSVY1250DK | 1SCA108702R1001 | 1 | 1.5 |

## Fuse replacement handles

| For DIN-fuse sizes | Description | Type | Order number | Units/ type [pcs] | Weight [kg] |
|---|---|---|---|---|---|
| 000,00,1,2,3 | Compact | OFAE 504 | 1SCA022007R6880 | 1 | 0.16 |
| 000,00,1,2,3 | 690 V | OFAE 505 | 2CMA125276R1000 | 1 | 0.80 |

## Extension ring for pistol type handles

| Colour | Suitable for handles | Type | Order number | Delivery batch [pcs] | Weight unit [kg] |
|---|---|---|---|---|---|
| Black | OHB_ | OHZX14 | 1SCA022851R6590 | 1 | 0.06 |

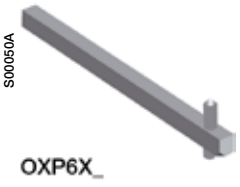


OXP6X_

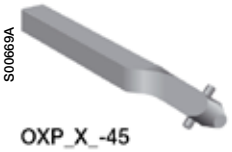


OXP_X_-45

## Extended shafts

Units/type = 1 piece




| Shaft length (mm) | Front operated H / mm | Side operated H / mm | Type | Order number | Delivery batch [pcs] | Weight /unit [kg] |
|---|---|---|---|---|---|---|
| **For OS 16...35 (Mini) [2], shaft diameter 6 mm** | | | | | | |
| 150 | 135...210 | 154...166 | OXP6X150[5] | 1SCA022295R5600 | 10 | 0.05 |
| 170 | 155...230 | 174...186 | OXP6X170 | 1SCA108224R1001 | 10 | 0.05 |
| 265 | 250...325 | 269...281 | OXP6X265 | 1SCA108225R1001 | 10 | 0.08 |
| 400 | 385...460 | 404...416 | OXP6X400 | 1SCA108226R1001 | 10 | 0.12 |
| 150 | 135...210 | 154...166 | OXP6X150-45[1] | 1SCA022294R4400 | 10 | 0.05 |
| 170 | 155...230 | 174...186 | OXP6X170-45[1] | 1SCA108227R1001 | 10 | 0.05 |
| 265 | 380...460 | 269...281 | OXP6X265-45[1] | 1SCA108228R1001 | 10 | 0.08 |
| 400 | 380...460 | 404...416 | OXP6X400-45[1] | 1SCA108229R1001 | 10 | 0.12 |
| **For OS 40 (Mini) [2], shaft diameter 6 mm** | | | | | | |
| 150 | 135...210 | 235...243 | OXP6X150[5] | 1SCA022295R5600 | 10 | 0.05 |
| 170 | 155...230 | 255...363 | OXP6X170 | 1SCA108224R1001 | 10 | 0.05 |
| 265 | 250...325 | 352...360 | OXP6X265 | 1SCA108225R1001 | 10 | 0.08 |
| 400 | 385...460 | 487...495 | OXP6X400 | 1SCA108226R1001 | 10 | 0.12 |
| 150 | 135...210 | 235...243 | OXP6X150-45[1] | 1SCA022294R4400 | 10 | 0.05 |
| 170 | 155...230 | 255...363 | OXP6X170-45[1] | 1SCA108227R1001 | 10 | 0.05 |
| 265 | 250...325 | 352...360 | OXP6X265-45[1] | 1SCA108228R1001 | 10 | 0.08 |
| 400 | 385...460 | 487...495 | OXP6X400-45[1] | 1SCA108229R1001 | 10 | 0.12 |
| **For OS 32G...63G [4] , shaft diameter 6 mm** | | | | | | |
| 63 | | 161…167 | OXP6X63 | 1SCA111010R1001 | 10 | 0.02 |
| 90 | | 188…194 | OXP6X90 | 1SCA022064R1180 | 10 | 0.03 |
| 130 | 127…174[6] | 228…234 | OXP6X130 | 1SCA022057R0570 | 10 | 0.04 |
| 161 | 138…205 | | OXP6X161[3] | 1SCA022067R1760 | 10 | 0.05 |
| 210 | 187…254 | | OXP6X210 | 1SCA022295R6080 | 10 | 0.06 |
| 290 | 267…334 | | OXP6X290 | 1SCA022042R6370 | 10 | 0.08 |
| 360 | 337…404 | | OXP6X360 | 1SCA022042R6530 | 10 | 0.10 |
| 430 | 407…474 | | OXP6X430 | 1SCA022056R6030 | 10 | 0.12 |
| 210 | 187…254 | | OXP6X210-45[1] | 1SCA022294R4230 | 10 | 0.06 |
| 290 | 267…334 | | OXP6X290-45[1] | 1SCA022304R4290 | 10 | 0.08 |
| 360 | 337…404 | | OXP6X360-45[1] | 1SCA022341R4640 | 10 | 0.10 |
| **For OS100G...160G [8], shaft diameter 6 mm** | | | | | | |
| 63 | | 196…202 | OXP6X63 | 1SCA111010R1001 | 10 | 0.02 |
| 90 | | 223…229 | OXP6X90 | 1SCA022064R1180 | 10 | 0.03 |
| 130 | 137…174[7] | 263…269 | OXP6X130 | 1SCA022057R0570 | 10 | 0.04 |
| 161 | 138…205 | | OXP6X161[3] | 1SCA022067R1760 | 10 | 0.05 |
| 210 | 187…254 | | OXP6X210 | 1SCA022295R6080 | 10 | 0.06 |
| 290 | 267…334 | | OXP6X290 | 1SCA022042R6370 | 10 | 0.08 |
| 360 | 337…404 | | OXP6X360 | 1SCA022042R6530 | 10 | 0.10 |
| 430 | 407…474 | | OXP6X430 | 1SCA022056R6030 | 10 | 0.12 |
| 210 | 187…254 | | OXP6X210-45[1] | 1SCA022294R4230 | 10 | 0.06 |
| 290 | 267…334 | | OXP6X290-45[1] | 1SCA022304R4290 | 10 | 0.08 |
| 360 | 337…404 | | OXP6X360-45[1] | 1SCA022341R4640 | 10 | 0.10 |
| **For OS 200...250 DIN-type, shaft diameter 6 mm** | | | | | | |
| 161 | 160...205 | | OXP6X161 | 1SCA022067R1760 | 10 | 0.05 |
| 210 | 189...254 | | OXP6X210[3] | 1SCA022295R6080 | 10 | 0.06 |
| 290 | 269...334 | | OXP6X290 | 1SCA022042R6370 | 10 | 0.08 |
| **For OS 200...250 BS-type, shaft diameter 6 mm** | | | | | | |
| 161 | 140…205 | | OXP6X161 | 1SCA022067R1760 | 10 | 0.05 |
| 210 | 189…254 | | OXP6X210[3] | 1SCA022295R6080 | 10 | 0.06 |
| 290 | 269…334 | | OXP6X290 | 1SCA022042R6370 | 10 | 0.08 |

[1] The shaft position is rotated 45 degrees
[2] Side operated, 4-pole: add 36 mm
[3] Included as standard in P-types
[4] Side operated 3-pole OS60GJ: add 33mm, 4-pole types: OS32…63GD/GB: add 23.5 mm, OS60GJ: add 68mm
[5] Included as standard in front operated types
[6] OS32…63GB/GF: 115…174
[7] OS100GJ: 113…174, OS100GB…160GB: 121…174
[8] Side operated 4-pole types: add 35mm

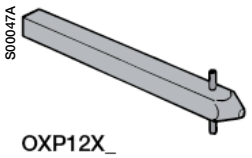

OXP12X_

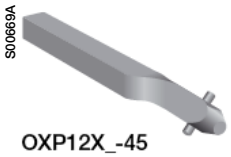

OXP12X_-45

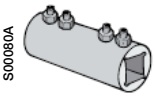

OETLZX95

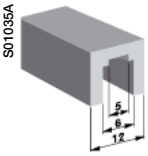

OETLZK19

## Extended shafts



| Shaft length (mm) | Front operated H / mm | Type | Order number | Units/ type [pcs] | Weight [kg] |
|---|---|---|---|---|---|
| **For OS 315...400, shaft diameter 12 mm** | | | | | |
| 250 | 230…325 | OXP12X250[2] | 1SCA022325R6980 | 1 | 0.30 |
| 280 | 260…355 | OXP12X280 | 1SCA022137R5140 | 1 | 0.30 |
| 325 | 305…400 | OXP12X325 | 1SCA022042R5810 | 1 | 0.36 |
| 395 | 375…470 | OXP12X395 | 1SCA022042R5990 | 1 | 0.43 |
| 465 | 445…540 | OXP12X465 | 1SCA022042R6020 | 1 | 0.51 |
| 535 | 515…610 | OXP12X535 | 1SCA022042R6110 | 1 | 0.59 |
| **For OS 630...800, shaft diameter 12 mm** | | | | | |
| 280 | 258...382 | OXP12X280[2] | 1SCA022137R5140 | 1 | 0.30 |
| 325 | 303...427 | OXP12X325 | 1SCA022042R5810 | 1 | 0.40 |
| 395 | 373...497 | OXP12X395 | 1SCA022042R5990 | 1 | 0.50 |
| 465 | 443...567 | OXP12X465 | 1SCA022042R6020 | 1 | 0.60 |
| 535 | 513...637 | OXP12X535 | 1SCA022042R6110 | 1 | 0.70 |
| 280 | 258...382 | OXP12X280-45[1] | 1SCA022382R0800 | 1 | 0.30 |
| 325 | 303...427 | OXP12X325-45[1] | 1SCA022304R4450 | 1 | 0.40 |
| **For OS 1200...1250, shaft diameter 12 mm** | | | | | |
| 395 | 371…500 | OXP12X395 | 1SCA022042R5990 | 1 | 0.43 |
| 465 | 441…570 | OXP12X465 | 1SCA022042R6020 | 1 | 0.51 |
| 535 | 511…640 | OXP12X535 | 1SCA022042R6110 | 1 | 0.59 |

## Shaft extension socket

For extending the shaft of combination attachment.

| Suitable for shaft with diameter [mm] | Type | Order number | Units/ type [pcs] | Weight [kg] |
|---|---|---|---|---|
| 12 | OETLZX95 | 1SCA022083R5620 | 1 | 0.04 |

## Adapters for extension socket

Adapters to place inside of OETLZX 95 to connect shafts of different sizes.

| | | | | |
|---|---|---|---|---|
| 6/6, 6/12 | OETLZK19 | 1SCA022093R1850 | 1 | 0.02 |

[1] The shaft position is rotated 45 degrees
[2] Included as standard in front operated P-types

# Auxiliary contacts
# Ordering information

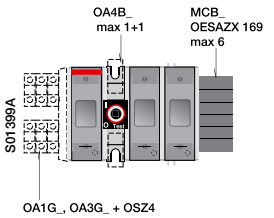

OS Mini


S00040A
MCB_


S00261A
OA_G

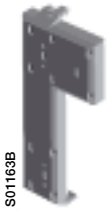
S01163B
OSZ4

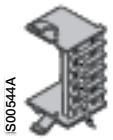
S00544A
OESAZX169

## Auxiliary contacts

| Description | Type | Order number | Units/type [pcs] | Weight [kg] |
|---|---|---|---|---|
| **Auxiliary contacts for OS Mini** | | | | |
| Mounting to the switch mechanism, auxiliary/test contacts. Max. two change over contacts. | | | | |
| **Change over contacts** | | | | |
| 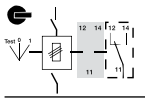 Handle position: Test / 0 — Main contacts: open / open / closed — Aux. / Test contacts N.O.: closed / open / closed | OA4B1C | 1SCA022193R0150 | 1 | 0.03 |
| **Single pole contacts** > 3 mm contact gap. | | | | |
| 1 NO  | OA4B10 | 1SCA022276R9050 | 1 | 0.03 |
| 1 NC | OA4B01 | 1SCA022276R9210 | 1 | 0.03 |
| **Mounting on the side of the switch** with aux.contact frame OESAZX 169. | | | | |
| 1NO 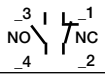 | MCB-10 | 1SCA022150R5110 | 1 | 0.03 |
| 1NC | MCB-01 | 1SCA022150R5370 | 1 | 0.03 |

**Snap-on mounting on the switch, by using a frame OSZ4. IP20.**

NO contacts are provided with a positive opening feature. Units/type = 1 piece. Types _AU have gold plated contacts for harsh environments and low operating voltages.

| Description | Type | Order number | Delivery batch [pcs] | Weight /unit [kg] |
|---|---|---|---|---|
| 1 NO  | OA1G10 | 1SCA022353R4970 | 10 | 0.03 |
| 1 NC | OA3G01 | 1SCA022456R7410 | 10 | 0.03 |
| 1 NO | OA1G10AU | 1SCA022436R7910 | 10 | 0.03 |
| 1 NC | OA3G01AU | 1SCA022819R5260 | 10 | 0.03 |

## Mounting frames for auxiliary contacts of OS Mini

| | Type | Order number | Units/type [pcs] | Weight [kg] |
|---|---|---|---|---|
| Frame for auxiliary contacts OA1G10 and OA3G01 and for fuse monitor. Max. 6 auxiliary contacts can be fitted. | | | | |
| Mounting on the left side of the switch | OSZ4 | 1SCA022530R0200 | 1 | 0.06 |
| Frame for MCB-_ auxiliary contacts. Not suitable for side operated switches. Max. 6 auxiliary contacts can be fitted. | | | | |
| Mounting on the right side of the switch | OESAZX169 | 1SCA022196R9360 | 1 | 0.06 |




# Auxiliary contacts

## Auxiliary contacts for OS 32G...1250

**Mounting under the mechanism cover:**

The “test” contacts operate in ON- and OFF-positions as well as when the handle is turned to TEST-position = 45 degrees over the OFF-position. The “test indication” contacts operate only when the handle is turned to TEST-position. See the function table below. The OA1G10 (N.O.) or OA3G01 (N.C.) auxiliary contact blocks can be used as standard auxiliary contacts, “test” or “test indication” contacts. The desired functions are achieved when an auxiliary contact block is installed in a specific place shown in the mounting instruction. In order to activate the “test” and “test indication” features a handle with test function is required. See the optional handles, page 30.

**Function table of OS32G…1250 auxiliary contacts**

| Handle position | Main contacts | Aux./Test contacts N.O. | Test indication contacts N.O. |
|---|---|---|---|
| Test | open | closed | closed |
| 0 | open | open | open |
| I | closed | closed | open |

Maximum number of contact blocks, “Aux./test” contacts and “test indication” contacts, see the table below. Standard versions include all except for N3-types which are equipped with integrated neutral through the mechanism.

**Maximum number of auxiliary contacts under the mechanism cover**

| | OS32G…250 | | OS315…800 | | OS1200…1250 | |
|---|---|---|---|---|---|---|
| Pole version | Standard | N3 | Standard | N3 | Standard | N3 |
| Maximum number of contact blocks | 4 | 0 | 8 | 4 | 12 | 8 |
| Aux./Test contacts | 4 | 0 | 4 | 2 | 8[1)] | 6[2)] |
| Test indication contacts | 2 | 0 | 4 | 2 | 4 | 2 |

The contact timing: see the chart, pages 63-64.

**Mounting on the left side of the switch fuse:**

Maximum 8 auxiliary contact blocks (N.O. or N.C.) with the OEA28 module. Units/type = 1 piece. Types _AU have gold plated contacts for harsh environments and low operating voltages.

| Suitable for switches | Description | Protection degree | Type | Order number | Delivery batch [pcs] | Weight [kg] |
|---|---|---|---|---|---|---|
| OS32G...1250 | 1NO | IP20 | OA1G10 | 1SCA022353R4970 | 10 | 0.03 |
| | 1NC | IP20 | OA3G01 | 1SCA022456R7410 | 10 | 0.03 |
| | 1 NO | IP20 | OA1G10AU | 1SCA022436R7910 | 10 | 0.03 |
| | 1 NC | IP20 | OA3G01AU | 1SCA022819R5260 | 10 | 0.03 |
| **Module for auxiliary contacts** | | | | | | |
| Screw mounting to the left side of the switch | | | OEA28 | 1SCA022714R8810 | 1 | 0.04 |

# Performance data for auxiliary contacts

**OA1G_, OA3G_**
**IEC60947-5-1**

| | |
|---|---|
| $U_i$/[V] | 690 |
| Uimp/[kV] | 4 |
| Pollution degree | 3 |
| $I_{th}$/[A] | 16 |
| Cable size | 1…2 x 0,75…2,5mm² |
| Maximum fuse | 16A/gG |
| NEMA | A600, R300 |
| Wire size | 18 - 14AWG, 1( 2) |

| Ue/[V] | AC15 Ie/[A] | Ue/[V] | DC12 Ie/[A] | P/[W] | DC13 Ie/[A] | P/[W] |
|---|---|---|---|---|---|---|
| 230 | 6 | 24 | 10 | 240 | 2 | 48 |
| 400 | 4 | 72 | 4 | 288 | 0.8 | 58 |
| 690 | 2 | 125 | 2 | 250 | 0.55 | 69 |
| | | 250 | 0,55 | 138 | 0.27 | 68 |
| | | 440 | 0.1 | 44 | | |

**OA4_**
**EN61058-1**

| | |
|---|---|
| $U_i$ | 400V |
| $I_{th}$ | 10A |
| Ie | 400V AC |
| | 10 (4) A, 10E3 |
| | 6 (2,5) A, 50E3 |
| NEMA | 10 A, 125-250V AC, 1/4 HP |
| M3 Screw connection | |

**MCB_**
**IEC60947-5-1**

| | | | | |
|---|---|---|---|---|
| $U_i$ | 690V | | | |
| $I_{th}$ | 10A | | | |
| | | AC12 | AC15 | DC13 |
| Ie | 24V | 10 | 8 | 5 |
| | 110V | 10 | 8 | 1.1 |
| | 220/240V | 10 | 6 | 0.55 |
| | 250V | | 4 | 0.55 |
| | 380/415V | | 4 | |
| | 660/690V | | 2 | |
| NEMA | A600, 10A, 600VAC | | | |

[1)] 6 aux/test contacts and 2 early operation aux./test contacts
[2)] 4 aux/test contacts and 2 early operation aux./test contacts

# Fourth poles, neutral and earth terminals
# Ordering information



OSP



OSZ1, 2



OESAZX171



OXN_



OESAZX_

## Fourth Poles

Snap-on mounting to the side of the switch.

| Suitable for 3-pole switches | Mounting side | Type | Order number | Units/ type [pcs] | Weight [kg] |
|---|---|---|---|---|---|
| **Fusible 4. poles** | | | | | |
| OS100GB...160GB | Left/right | OSP160GB | 1SCA114769R1001 | 1 | 0.45 |
| OS125GD...160GD | Left/right | OSP160GD | 1SCA114768R1001 | 1 | 0.45 |
| OS200B | Left/right | OSP200B | 1SCA022735R9180 | 1 | 1.20 |
| OS200D | Left/right | OSP200D | 1SCA022735R8960 | 1 | 1.20 |
| OS250B | Left/right | OSP250B | 1SCA022770R4030 | 1 | 1.20 |
| OS250D | Left/right | OSP250D | 1SCA022735R9340 | 1 | 1.20 |
| OS315B…400B | Left/right | OSP400B | 1SCA022770R3140 | 1 | 2.00 |
| OS400D | Left/right | OSP400D | 1SCA022770R3220 | 1 | 2.00 |
| OS630...800D | Left/right | OSP800D | 1SCA100433R1001 | 1 | 4.20 |
| OS630...800B | Left/right | OSP800B | 1SCA100434R1001 | 1 | 4.20 |
| OS1250D | Left/right | OSP1250D | 1SCA107946R1001 | 1 | 7.20 |
| OS1250DA | Left/right | OSP1250DA | 1SCA112402R1001 | 1 | 7.20 |
| OS1250B | Left/right | OSP1250B | 1SCA107950R1001 | 1 | 7.20 |
| **Switched 4. poles** | | | | | |
| OS100G...160G | Left/right | OSP160GN | 1SCA114770R1001 | 1 | 0.45 |
| OS200_ | Left/right | OSP200N | 1SCA022735R8700 | 1 | 1.20 |
| OS250_ | Left/right | OSP250N | 1SCA022735R9260 | 1 | 1.20 |
| OS400_ | Left/right | OSP400N | 1SCA022770R3490 | 1 | 1.20 |
| OS630...800 | Left/right | OSP800N | 1SCA100432R1001 | 1 | 4.40 |
| OS1200...1250 | Left/right | OSP1250N | 1SCA107943R1001 | 1 | 7.20 |

## Neutral links

| Max. wire | H/W/D [mm] | Mounting holes | Type | Order number | Units/type [pcs] | Weight [kg] |
|---|---|---|---|---|---|---|
| **For OS Mini** | | | | | | |
| Detachable, mounting on the side of the switch, on the mounting plate or DIN-rail. | | | | | | |
| 16 mm² Cu | 39/41/40 | ø 4.2, distance 32 | OESAZX171 | 1SCA022197R2580 | 1 | 0.15 |
| **For OS 32G...160G** | | | | | | |
| Detachable, mounting onto the base plate or DIN-rail. | | | | | | |
| 16 mm² Cu | 39/41/40 | ø 4.2, distance 32 | OSZ1 | 1SCA022481R3710 | 1 | 0.06 |
| 35 mm² Cu | 39/44/45 | ø 4.2, distance 35 | OSZ2 | 1SCA022481R3800 | 1 | 0.07 |
| **For OS 100G...1250** | | | | | | |
| Mounting with screws (included) onto either side of the switch (OXN250) or on the base plate (OXN250...1250). | | | | | | |
| OS100G...250 | | | OXN250 | 1SCA022752R9950 | 1 | 0.40 |
| OS315…400 | | | OXN400 | 1SCA022770R3060 | 1 | 0.70 |
| OS630…800 | | | OXN800S | 1SCA022831R4880 | 1 | 1.20 |
| OS1250 | | | OXN1250S | 1SCA104163R1001 | 1 | 2.5 |

**Mounting separately to the base plate**

| $I_{th}$ [A] | Terminal size (WxD) [mm]; bolt size | Type | Order number | Units/ type [pcs] | Weight [kg] |
|---|---|---|---|---|---|
| 250 | 12x3 M6 | OESAZX162 | 1SCA022193R0400 | 1 | 0.12 |
| 315 | 20x3 M8 | OESAZX164 | 1SCA022202R9520 | 1 | 0.10 |
| 400 | 25x4 M10 | OESAZX165 | 1SCA022202R9790 | 1 | 0.12 |
| 1000 | 40x5 M12 | OESAZX160 | 1SCA022186R3960 | 1 | 1.00 |




OFAW00




OESAZG5, OESAZS36 OESAZK98, OESAZL79

## Solid links

| Suitable for | Type | Order number | Units/ type [pcs] | Weight [kg] |
|---|---|---|---|---|
| OS 20FB...OS 32FB_A1 | OESAZG98 | 1SCA022354R9650 | 1 | 0.01 |
| OS32GD...OS160GD | OFAW00 | 1SCA022003R9680 | 1 | 0.08 |
| OS 32FB_A2...OS63GB | OESAZG5 | 1SCA022057R1380 | 1 | 0.02 |
| OS100GB...OS160GB | OESAZS36 | 1SCA022044R4600 | 1 | 0.02 |
| OS100GJ | OESAZS175 | 1SCA022354R9570 | 1 | 0.03 |
| OS 200…250B, J | OEZNL1 | 1SCA022723R7400 | 1 | 0.19 |
| OS 315...400B, J[1)] | OESAZK98 | 1SCA022067R7370 | 1 | 0.24 |
| OS 630 B...800 B | OESAZL79 | 1SCA022067R7110 | 1 | 0.64 |
| OS600J, 800…1200L | OEZNL8 | 1SCA113998R1001 | 1 | 0.58 |
| OS1250B | OEZNL10 | 1SCA116437R1001 | 1 | 0.60 |
| OS 250 D | OFAW1 | 1SCA022003R9760 | 1 | 0.15 |
| OS 400 D | OFAW2 | 1SCA022003R9840 | 1 | 0.24 |
| OS 630/800 D | OFAW3 | 1SCA022003R9920 | 1 | 0.28 |

[1)] For OS400J fixing bolts and washers (M8) shall be ordered separately, type FLHSUM8x16-KB/41, two required.

# Terminal shrouds and phase barriers
# Ordering information

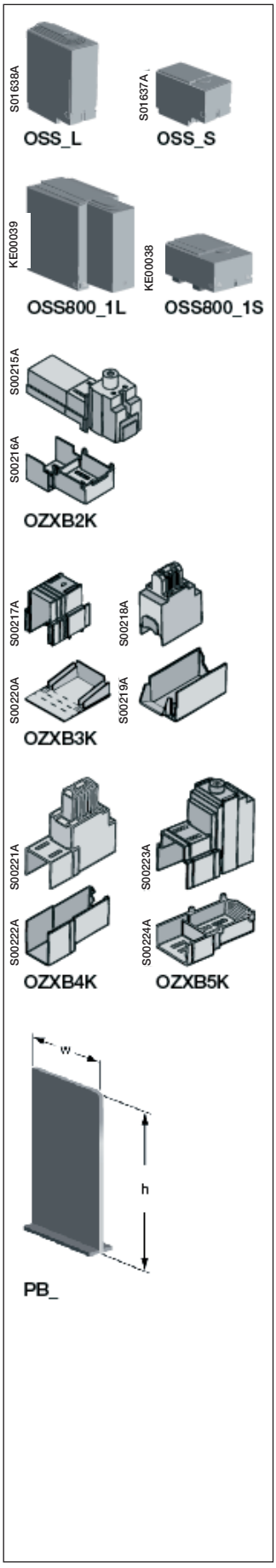


## Terminal shrouds

| Suitable for switches | Description (L/mm) | Type | Order number | Units/ type [pcs] | Weight [kg] |
|---|---|---|---|---|---|
| **Pack of single pole terminal shrouds,** snap-on mounting, grey plastic, IP 3X.Transparent shrouds available on request. | | | | | |
| OS100G…160G | Long type | OSS160GG1L/3 | 1SCA114764R1001 | 3 | 0.08 |
| | Short type | OSS160GG1S/3 | 1SCA114766R1001 | 3 | 0.05 |
| | Long type | OSS160GG1L/4 | 1SCA114765R1001 | 4 | 0.11 |
| | Short type | OSS160GG1S/4 | 1SCA114767R1001 | 4 | 0.07 |
| OS200 | Long type | OSS200G1L/3 | 1SCA022731R8910 | 3 | 0.09 |
| | Short type | OSS200G1S/3 | 1SCA022732R0130 | 3 | 0.06 |
| | Long type | OSS200G1L/4 | 1SCA022731R9040 | 4 | 0.12 |
| | Short type | OSS200G1S/4 | 1SCA022732R0050 | 4 | 0.08 |
| OS250 | Long type | OSS250G1L/3 | 1SCA022731R9390 | 3 | 0.09 |
| | Short type | OSS250G1S/3 | 1SCA022731R9550 | 3 | 0.06 |
| | Long type | OSS250G1L/4 | 1SCA022731R9470 | 4 | 0.12 |
| | Short type | OSS250G1S/4 | 1SCA022731R9630 | 4 | 0.08 |
| OS315...400 | Long type | OSS400G1L/3 | 1SCA022776R6650 | 3 | 0.18 |
| | Short type | OSS400G1S/3 | 1SCA022776R6900 | 3 | 0.10 |
| | Long type | OSS400G1L/4 | 1SCA022776R6730 | 4 | 0.25 |
| | Short type | OSS400G1S/4 | 1SCA022776R7030 | 4 | 0.15 |
| OS600...800 | Long type | OSS800G1L/3 | 1SCA022776R7200 | 3 | 0.53 |
| | Short type | OSS800G1S/3 | 1SCA022776R7540 | 3 | 0.21 |
| | Long type | OSS800G1L/4 | 1SCA022776R7380 | 4 | 0.70 |
| | Short type | OSS800G1S/4 | 1SCA022776R7460 | 4 | 0.28 |
| OS1200...1250 | Long type | OSS1250G1L/3 | 1SCA107938R1001 | 3 | 0.76 |
| | Short type | OSS1250G1S/3 | 1SCA107939R1001 | 3 | 0.40 |
| | Long type | OSS1250G1L/4 | 1SCA107940R1001 | 4 | 1.00 |
| | Short type | OSS1250G1S/4 | 1SCA107941R1001 | 4 | 0.52 |
| **Terminal shrouds** suitable for mechanisms with detachable integrated neutral (N3 versions). | | | | | |
| OS100G…250_N3_ | Long type | OTS250G1L | 1SCA022715R5340 | 1 | 0.03 |
| | Short type | OTS250G1S | 1SCA022715R5260 | 1 | 0.02 |
| OS315…400_N3_ | Long type | OSS250G1L | 1SCA022727R5080 | 1 | 0.03 |
| | Short type | OSS250G1S | 1SCA022727R4940 | 1 | 0.02 |
| OS630…800_N3_ | Long type | OTS800G1L | 1SCA022776R7710 | 1 | 0.10 |
| | Short type | OTS800G1S | 1SCA022776R8010 | 1 | 0.06 |
| OS1200...1250_N3_ | Long type | OTS1600G1L | 1SCA106134R1001 | 1 | 0.20 |
| | Short type | OTS1600G1S | 1SCA102667R1001 | 1 | 0.12 |

**Single pole terminal shroud for terminal clamps,** snap-on mounting, transparent plastic, IP 2X.

| Suitable for terminal clamps | Type | Order number | Units/ type [pcs] | Weight [kg] |
|---|---|---|---|---|
| OZXB2, 2L | OZXB2K | 1SCA022264R0010 | 1 | 0.05 |
| OZXB3, 4 | OZXB3K | 1SCA022264R0440 | 1 | 0.20 |
| OZXB5, 6 | OZXB4K | 1SCA022199R2850 | 1 | 0.24 |
| OZXB7, 7L | OZXB5K | 1SCA022283R8040 | 1 | 0.13 |

## Phase barriers

The phase barriers designed for ABB Tmax T4-T5 MCCB's can also be used for OS200…400 switch fuses. 3-pole switch fuses need 4 barriers and 4-pole switch fuses need 6 barriers for full protection.

| Suitable for switches | Number of poles | Height h [mm] | Cutting width w of the phase barrier [mm] | Type | Order number | Units/ type [pcs] |
|---|---|---|---|---|---|---|
| OS200B/D, OS250 | 3 | 100 | 55 | PB100 low | 1SDA054970R1 | 4 |
| OS315, OS400 | 3 | 200 | 55 | PB200 high | 1SDA054972R1 | 4 |
| | 4 | 100 | 55 | PB100 low | 1SDA054971R1 | 6 |
| | 4 | 200 | 55 | PB200 high | 1SDA054973R1 | 6 |


S00738A
OZXT1


S00177A
OZXB1L


S00179A
OZXB2


S00182A
OZXB2L, 7L


S01806A
OZXB8, 9


S00186A
OZXB3, 5


S00188A
OZXB4, 6

## Terminal clamp sets for Al- and Cu-cables

| Suitable for switches | Cable cross section [mm²] | Suitable shroud | Type | Order number | Units/ type [pcs] | Weight [kg] |
|---|---|---|---|---|---|---|
| **Insulated versions** | | | | | | |
| OS32G…63G | 16…50 Al, | | OZXT1 | 1SCA022469R6310 | 3 | 0.05 |
| | 2.5…50 Cu | | OZXT1/1 | 1SCA022469R6490 | 1 | 0.02 |
| **OZXB-type Al/Cu connectors made of stainless steel** | | | | | | |
| OS100G…160G | 10...70 | OSS160G_ | OZXB1L | 1SCA022169R2030 | 3 | 0.15 |
| | 10...70 | OSS160G_ | OZXB1L/1 | 1SCA022194R0030 | 1 | 0.05 |
| | 95...185 | OSS160G_ | OZXB8 | 1SCA022744R1510 | 3 | 0.5 |
| | 95...185 | OSS160G_ | OZXB8/1 | 1SCA022744R1600 | 1 | 0.17 |
| OS200 | 10...70 | OSS200_L | OZXB1L | 1SCA022169R2030 | 3 | 0.15 |
| | 10...70 | OSS200_L | OZXB1L/1 | 1SCA022194R0030 | 1 | 0.05 |
| | 25...120 | OZXB2K | OZXB2 | 1SCA022119R7610 | 3 | 0.34 |
| | 25...120 | OZXB2K | OZXB2/1 | 1SCA022194R0200 | 1 | 0.12 |
| | 25...120 | OZXB2K | OZXB2L | 1SCA022158R7750 | 3 | 0.42 |
| | 25...120 | OZXB2K | OZXB2L/1 | 1SCA022194R0460 | 1 | 0.14 |
| | 95...185 | OSS200_L | OZXB8 | 1SCA022744R1510 | 3 | 0.50 |
| | 95...185 | OSS200_L | OZXB8/1 | 1SCA022744R1600 | 1 | 0.17 |
| | 95...240 | OSS200_L | OZXB9 | 1SCA022750R3210 | 3 | 0.50 |
| | 95...240 | OSS200_L | OZXB9/1 | 1SCA022750R3300 | 1 | 0.17 |
| OS250 | 25...120 | OZXB2K | OZXB2L | 1SCA022158R7750 | 3 | 0.42 |
| | 25...120 | OZXB2K | OZXB2L/1 | 1SCA022194R0460 | 1 | 0.14 |
| | 95…185 | OZXB3K | OZXB3 | 1SCA022136R8100 | 3 | 1.30 |
| | 95…185 | OZXB3K | OZXB3/1 | 1SCA022194R0620 | 1 | 0.44 |
| | 2x(95…185) | OZXB3K | OZXB4 | 1SCA022137R4760 | 3 | 1.70 |
| | 2x(95…185) | OZXB3K | OZXB4/1 | 1SCA022194R0890 | 1 | 0.57 |
| | 120...300 | OZXB4K | OZXB5 | 1SCA022137R2470 | 3 | 2.30 |
| | 120...300 | OZXB4K | OZXB5/1 | 1SCA022194R1010 | 1 | 0.77 |
| | 120...240 | OZXB5K | OZXB7L | 1SCA022185R7130 | 3 | 1.20 |
| | 120...240 | OZXB5K | OZXB7L/1 | 1SCA022194R1600 | 1 | 0.40 |
| | 95...185 | OSS250_L | OZXB8 | 1SCA022744R1510 | 3 | 0.50 |
| | 95...185 | OSS250_L | OZXB8/1 | 1SCA022744R1600 | 1 | 0.17 |
| | 95...240 | OSS250_L | OZXB9 | 1SCA022750R3210 | 3 | 0.50 |
| | 95...240 | OSS250_L | OZXB9/1 | 1SCA022750R3300 | 1 | 0.17 |
| OS315…400 | 25…120 | OSS400_L | OZXB2L | 1SCA022158R7750 | 3 | 0.42 |
| | 25…120 | OSS400_L | OZXB2L/1 | 1SCA022194R0460 | 1 | 0.14 |
| | 95…185 | OZXB3K | OZXB3 | 1SCA022136R8100 | 3 | 1.30 |
| | 95…185 | OZXB3K | OZXB3/1 | 1SCA022194R0620 | 1 | 0.44 |
| | 2x(95…185) | OZXB3K | OZXB4 | 1SCA022137R4760 | 3 | 1.70 |
| | 2x(95…185) | OZXB3K | OZXB4/1 | 1SCA022194R0890 | 1 | 0.57 |
| | 120…300 | OZXB4K | OZXB5 | 1SCA022137R2470 | 3 | 2.30 |
| | 120…300 | OZXB4K | OZXB5/1 | 1SCA022194R1010 | 1 | 0.77 |
| | 2x(120…300) | OZXB4K | OZXB6 | 1SCA022137R4920 | 3 | 3.03 |
| | 2x(120…300) | OZXB4K | OZXB6/1 | 1SCA022194R1270 | 1 | 1.00 |
| | 120…240 | OZXB5K | OZXB7 | 1SCA022185R0040 | 3 | 1.00 |
| | 120…240 | OZXB5K | OZXB7/1 | 1SCA022194R1430 | 1 | 0.34 |
| | 95…185 | OSS400_L | OZXB8 | 1SCA022744R1510 | 3 | 0.50 |
| | 95…185 | OSS400_L | OZXB8/1 | 1SCA022744R1600 | 1 | 0.17 |
| | 95…240 | OSS400_L | OZXB9 | 1SCA022750R3210 | 3 | 0.50 |
| | 95…240 | OSS400_L | OZXB9/1 | 1SCA022750R3300 | 1 | 0.17 |


S00186A
OZXB3, 5


S00188A
OZXB4, 6


S00182A
OZXB2L, 7L


S01806A
OZXB8, 9

## Terminal clamp sets for Al- and Cu-cables

| Suitable for switches | Cable cross section [mm²] | Suitable shroud | Type | Order number | Units/ type [pcs] | Weight [kg] |
|---|---|---|---|---|---|---|
| **OZXB-type Al/Cu connectors made of stainless steel** | | | | | | |
| OS630...800 | 95...185 | OSS800_L | OZXB3 | 1SCA022136R8100 | 3 | 1.30 |
| | 95...185 | OSS800_L | OZXB3/1 | 1SCA022194R0620 | 1 | 0.44 |
| | 2x(95...185) | OSS800_L | OZXB4 | 1SCA022137R4760 | 3 | 1.70 |
| | 2x(95...185) | OSS800_L | OZXB4/1 | 1SCA022194R0890 | 1 | 0.57 |
| | 120...300 | OSS800_L | OZXB5 | 1SCA022137R2470 | 3 | 2.30 |
| | 120...300 | OSS800_L | OZXB5/1 | 1SCA022194R1010 | 1 | 0.77 |
| | 2x(120...300) | OSS800_L | OZXB6 | 1SCA022137R4920 | 3 | 3.03 |
| | 2x(120...300) | OSS800_L | OZXB6/1 | 1SCA022194R1270 | 1 | 1.00 |
| | 120...240 | OSS800_L | OZXB7L | 1SCA022185R7130 | 3 | 1.20 |
| | 120...240 | OSS800_L | OZXB7L/1 | 1SCA022194R1600 | 1 | 0.40 |
| | 95...185 | OSS800_L | OZXB8 | 1SCA022744R1510 | 3 | 0.50 |
| | 95...185 | OSS800_L | OZXB8/1 | 1SCA022744R1600 | 1 | 0.17 |
| | 95...240 | OSS800_L | OZXB9 | 1SCA022750R3210 | 3 | 0.50 |
| | 95...240 | OSS800_L | OZXB9/1 | 1SCA022750R3300 | 1 | 0.17 |
| OS1250 | 95...185 | OTS1600_L | OZXB3 | 1SCA022136R8100 | 3 | 1.30 |
| | 95...185 | OTS1600_L | OZXB3/1 | 1SCA022194R0620 | 1 | 0.44 |
| | 2x(95...185) | OTS1600_L | OZXB4 | 1SCA022137R4760 | 3 | 1.70 |
| | 2x(95...185) | OTS1600_L | OZXB4/1 | 1SCA022194R0890 | 1 | 0.57 |
| | 120...300 | OTS1600_L | OZXB5 | 1SCA022137R2470 | 3 | 2.30 |
| | 120...300 | OTS1600_L | OZXB5/1 | 1SCA022194R1010 | 1 | 0.77 |
| | 2x(120...300) | OTS1600_L | OZXB6 | 1SCA022137R4920 | 3 | 3.03 |
| | 2x(120...300) | OTS1600_L | OZXB6/1 | 1SCA022194R1270 | 1 | 1.00 |
| | 120...240 | OTS1600_L | OZXB7L | 1SCA022185R7130 | 3 | 1.20 |
| | 120...240 | OTS1600_L | OZXB7L/1 | 1SCA022194R1600 | 1 | 0.40 |
| | 95...185 | OTS1600_L | OZXB8 | 1SCA022744R1510 | 3 | 0.50 |
| | 95...185 | OTS1600_L | OZXB8/1 | 1SCA022744R1600 | 1 | 0.17 |
| | 95...240 | OTS1600_L | OZXB9 | 1SCA022750R3210 | 3 | 0.50 |
| | 95...240 | OTS1600_L | OZXB9/1 | 1SCA022750R3300 | 1 | 0.17 |
| **OZXR type Al/Cu connectors made of stainless steel and copper** | | | | | | |
| OS100G...160G | 6...70 | OSS160G_L | OZXR70 | 1SCA115529R1001 | 3 | 0.15 |
| | 25...95 | OSS160G_L | OZXR95 | 1SCA115530R1001 | 3 | 0.21 |
| OS200 | 25...95 | OSS200_L | OZXR95 | 1SCA115530R1001 | 3 | 0.21 |
| | 95...185 | OSS200_L | OZXR185 | 1SCA115531R1001 | 3 | 0.45 |
| | 2x(95...185) | - | OZXR2X185 | 1SCA115534R1001 | 3 | 0.66 |
| OS250 | 95...185 | OSS250_L | OZXR185 | 1SCA115531R1001 | 3 | 0.45 |
| | 2x(95...185) | - | OZXR2X185 | 1SCA115534R1001 | 3 | 0.66 |
| OS315...400 | 95...240 | OSS400_L | OZXR240 | 1SCA115532R1001 | 3 | 0.42 |
| | 2x(95...185) | - | OZXR2X185 | 1SCA115534R1001 | 3 | 0.66 |
| | 185...300 | - | OZXR300 | 1SCA115533R1001 | 3 | 0.87 |
| OS630...800 | 2x(185...300) | OSS800_L | OZXR2X300 | 1SCA115535R1001 | 3 | 1.59 |
| **OZXP type Al/Cu connectors made of tin plated aluminium profile** | | | | | | |
| OS100G...160G | 6...95 | OSS160G_L | OZXP95 | 1SCA115539R1001 | 3 | 0.09 |
| OS200 | 6...95 | OSS200_L | OZXP95 | 1SCA115539R1001 | 3 | 0.09 |
| | 16...120 | OSS200_L | OZXP120 | 1SCA115540R1001 | 3 | 0.15 |
| | 25...150 | - | OZXP150 | 1SCA115541R1001 | 3 | 0.18 |
| | 35...240 | - | OZXP240 | 1SCA115542R1001 | 3 | 0.27 |
| OS250 | 35...240 | - | OZXP240 | 1SCA115542R1001 | 3 | 0.27 |
| OS315...400 | 35...240 | - | OZXP240 | 1SCA115542R1001 | 3 | 0.27 |
| | 95...300 | - | OZXP300 | 1SCA115543R1001 | 3 | 0.42 |
| | 2x(70...240) | - | OZXP2X240 | 1SCA115544R1001 | 3 | 1.38 |
| OS630...800 | 2x(70...240) | OSS800_L | OZXP2X240 | 1SCA115544R1001 | 3 | 1.38 |

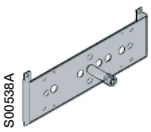

OW_6DS_



OESAZW2



OETLZW9

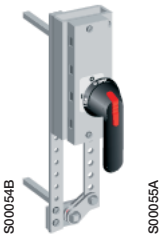

OTZW25, OETLZW11

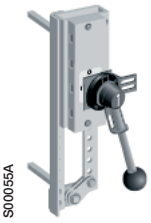

OETLZW12



OTZW26



OETLZW13



OTZW10

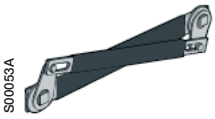

OETLZW3, 14, 15

## Conversion kits for front operated combination switches

| Suitable for switches | Remarks | Shaft distance [mm] | Type | Order number | Units/ type [pcs] | Weight [kg] |
|---|---|---|---|---|---|---|
| **6 and 8-pole switch mechanism** | | | | | | |
| Parallel attachment for connecting 3- and 4-pole switches. The switches work simultaneously. | | | | | | |
| **6-pole switches** | | | | | | |
| OS Mini | Two 3-pole switches needed. | | OWP6DS1 | 1SCA105255R1001 | 1 | 0.69 |
| **8-pole switches** | | | | | | |
| OS Mini | Two 4-pole switches needed. | | OWP6DS2 | 1SCA105256R1001 | 1 | 0.69 |
| The attachment levers are provided with holes, enabling different shaft distances. The combination switches can be mounted either horizontally or vertically. | | | | | | |
| OS32G-250 | Two 3- or 4-pole switches needed | 45+(0-13)x15 | OESAZW2 | 1SCA022078R1600 | 1 | 0.37 |
| OS315-400 | Two 3- or 4-pole switches needed | 60+(0-19)x20 | OETLZW9 | 1SCA022061R3300 | 1 | 1.1 |
| **Change-over switch mechanism** | | | | | | |
| Two switches connected with a mechanism operating into I-O-II positions. | | | | | | |
| OS Mini | Two 3-pole switches needed | | OWC6DSH1 | 1SCA105251R1001 | 1 | 1.0 |
| OS Mini | Two 4-pole switches needed | | OWC6DSH2 | 1SCA105252R1001 | 1 | 1.0 |
| OS32G-250 | Two 3- or 4-pole switches needed | 210+(0 - 18)x20 | OTZW25 | 1SCA022778R6920 | 1 | 2.8 |
| OS315-400 | Two 3- or 4-pole switches needed | 210+(0 - 11)x20 | OETLZW11 | 1SCA022078R0030 | 1 | 3.0 |
| OS315-400 | Two 3- or 4-pole switches needed | 210+(0 - 20)x20 | OETLZW12 | 1SCA022078R0200 | 1 | 4.6 |
| **By-pass switch mechanism** | | | | | | |
| A combination of two switches in parallel with a third switch for change-over operation to pass- by, for example, a breaker for maintenance. The by-pass attachment can be used together with another combination attachment. | | | | | | |
| OS32G - 250 | Three 3- or 4-pole switches needed | Between 1 and 2: 210+(0 - 9)x20 Between 1 and 3: 250+(0 - 9)x20 | OTZW26 | 1SCA022778R7060 | 1 | 3.3 |
| OS315-400 | Three 3- or 4-pole switches needed | Between 1 and 2: 210+(0 - 18)x20 Between 1 and 3: 250+(0 - 18)x20 | OETLZW13 | 1SCA022078R0460 | 1 | 4.0 |
| **Mechanical interlock mechanism** | | | | | | |
| Prevents one switch from closing to ON -position, if the other is not in OFF - position. | | | | | | |
| OTZW/OETLZW-types: When mounted upside down, prevents one switch from opening to OFF-position, if the other is not in the ON-position. (UPS-usage, make-before-break) | | | | | | |
| OS Mini | Two 3-pole switches needed | | OWM6DS1 | 1SCA105253R1001 | 1 | 0.30 |
| OS Mini | Two 4-pole switches needed | | OWM6DS2 | 1SCA105254R1001 | | 0.30 |
| OS32G-250 | Two 3- or 4-pole switches needed | 190 | OTZW10 | 1SCA022431R5280 | 1 | 0.40 |
| OS315-800 | Two 3- or 4-pole switches needed | 250 | OETLZW14 | 1SCA022077R3410 | 1 | 0.70 |
| OS315-800 | Two 3- or 4-pole switches needed | 300 | OETLZW3 | 1SCA022049R0380 | 1 | 0.80 |
| OS315-1250 | Two 3- or 4-pole switches needed | 500 | OETLZW15 | 1SCA022081R9340 | 1 | 1.24 |

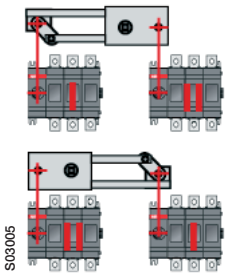


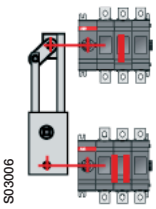


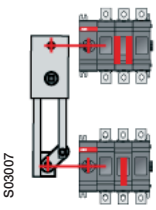


Change-over switches

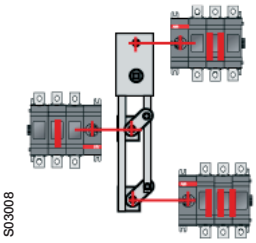


By-pass switches

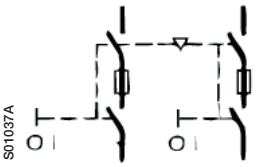


Mechanical interlock

## The shafts and handles for conversion kits

| Conversion kit type | To be ordered separately | | Included in the conversion kit delivery | | The standard handle or shaft of one of the combined switches can be used | |
|---|---|---|---|---|---|---|
| | Shaft | Handle | Shaft | Handle | Shaft | Handle |
| **6 and 8-pole switches** | | | | | | |
| OWP6DS1 | x | - | - | - | - | x |
| OWP6DS2 | x | - | - | - | - | x |
| OESAZW2 | - | - | x (2 pcs) | OHB145J12 | - | - |
| OETLZW9 | - | - | - | - | x | x |
| **Change-over switches** | | | | | | |
| OWC6DSH1 | x (length min. 170mm) | - | - | OHB65J6E011 | - | - |
| OWC6DSH2 | x (length min. 170mm) | - | - | OHB65J6E011 | - | - |
| OTZW25 | - | - | x (2 pcs) | OHB95J12E011 | - | - |
| OETLZW11 | - | - | x (2 pcs) | OHB145J12E011 | - | - |
| OETLZW12 | - | - | x (2 pcs) | YASDA21 | - | - |
| **By-pass switches** | | | | | | |
| OTZW26 | - | - | x (3 pcs) | OHB95J12E011 | - | - |
| OETLZW13 | - | - | x (3 pcs) | YASDA 6 | - | - |
| **Mechanical interlock** | | | | | | |
| OWM6DS1 | x (2 pcs, length min. 170mm) | x (2 pcs) | - | - | - | - |
| OWM6DS2 | x (2 pcs, length min. 170mm) | x (2 pcs) | - | - | - | - |
| OTZW10 | - | - | - | - | x | x |
| OETLZW14 | - | - | - | - | x | x |
| OETLZW3 | - | - | - | - | x | x |
| OETLZW15 | - | - | - | - | x | x |

The functional diagram

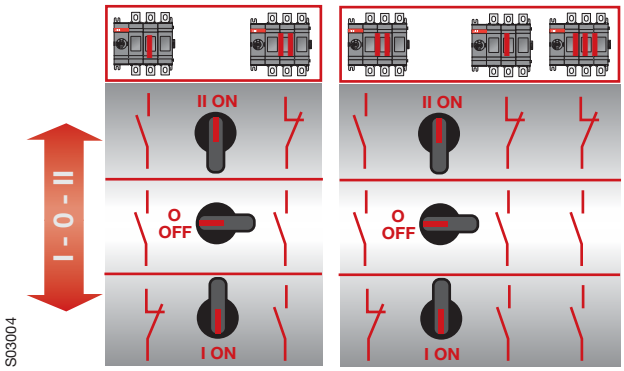


Change-over switch  By-pass switch

# Blown fuse indicators
# Ordering information


S00908A
OFM_


S01982A
OFS_


S00954A
OFMZX2


S01163B
OSZ4

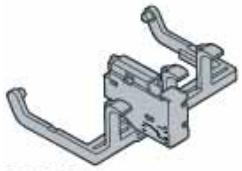
S00543A
OSD25


S02206A
OSZX_

## Electronic fuse monitor

Includes the auxiliary contacts 1NO + 1NC. More information, see brochure OFM_OFS20GB.

**OS Mini**

Mounting onto the left side of OS Mini (with a frame OSZ4) or on mounting plate.

| Rated voltage [Vac] | Type | Order Number | Units/ type [pcs] | Weight [kg] |
|---|---|---|---|---|
| 100...260 | OFM260 | 1SCA022459R8560 | 1 | 0.14 |
| 380...690 | OFM690 | 1SCA022459R8480 | 1 | 0.14 |

**OS32G...1250**

Mounting onto the left side of OS32G-1250 switch fuse or on DIN-rail or on mounting plate.

| | | | | |
|---|---|---|---|---|
| 100…260 | OFS260 | 1SCA022716R0180 | 1 | 0.16 |
| 380…690 | OFS690 | 1SCA022715R9920 | 1 | 0.16 |

## Mounting accessories for fuse monitor

| Suitable for switches | Flat terminal size [mm] | Type | Order Number | Units/ type [pcs] | Weight [kg] |
|---|---|---|---|---|---|
| **Crimp terminals** | | | | | |
| OS_ | 2.8 - 0.8 | OFMZX2 | 1SCA022475R9910 | 6 | 0.01 |
| **Mounting frame for OS Mini** | | | | | |
| Mounting on the left side of the switch | | OSZ4 | 1SCA022530R0200 | 1 | 0.6 |

## Blown fuse indicators (DPMM)

Striker type fuse is needed.

| Suitable for switches | Type | Order Number | Units/ type [pcs] | Weight [kg] |
|---|---|---|---|---|
| **OS Mini** Auxiliary contact (1x C/O) included. | | | | |
| for 3-pole switches | OSD25P3 | 1SCA022192R9060 | 1 | 0.1 |
| for 4-pole switches, fused neutral | OSD25P4 | 1SCA022196R9520 | 1 | 0.1 |
| **OS50GF_** Auxiliary contacts (3 x C/O in 3-pole, 4 x C/O in 4-pole) included. | | | | |
| for 3-pole switches | OSGD50P3 | 1SCA116401R1001 | 1 | 0.015 |
| for 4-pole switches, fused neutral | OSGD50P4 | 1SCA115689R1001 | 1 | 0.02 |
| **OS 125GF_** Auxiliary contacts (3 x C/O in 3-pole, 4 x C/O in 4-pole) included. | | | | |
| for 3-pole switches | OSGD125P3 | 1SCA115690R1001 | 1 | 0.025 |
| **for 4-pole switches, fused neutral** | OSGD125P4 | 1SCA115692R1001 | **1** | **0.035** |
| **OS250...1250** Auxiliary contacts (3xNO + 3xNC in 3-pole and 4xNO + 4xNC in 4-pole) included. | | | | |
| for 3-pole switches | OSZX3 | 1SCA101224R1001 | 1 | 0.15 |
| for 4-pole switches | OSZX4 | 1SCA101225R1001 | 1 | 0.20 |

**C/O = Change over contact**

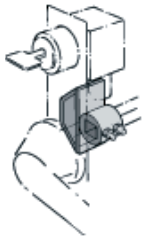

OETLZW5


OSZT1_


OSZT2...4_


PDAL2_



OSGZD1

## Cam attachment

**for Castell, Lowe & Fletcher and Ronis interlock**
Cam attachment for adopting the switches to the interlock system. The interlock is not included.

| Suitable for switches | Type | Order number | Units/ type [pcs] | Weight [kg] |
|---|---|---|---|---|
| OS16...250 | OETLZW16 | 1SCA022095R2070 | 1 | 0.17 |
| OS315...1250 | OETLZW5 | 1SCA022052R3900 | 1 | 0.14 |

## Mechanism interlock kits & Electrical interlocks

OS32G...1250 switch fuses can be interlocked in the OFF position using padlocks and by using a mechanical interlock kit mounted on the mechanism.
The diameter of the lock bail can be max 8 mm.
Note: The shaft must go through the interlock into the switch mechanism.

| Suitable for switches | Type | Order number | Units/ type [pcs] | Weight [kg] |
|---|---|---|---|---|
| Interlocking in the OFF position | | | | |
| OS32G...160G | OTZT1A | 1SCA106522R1001 | 1 | 0.21 |
| OS200 ... 250_ | OSZT1A | 1SCA106532R1001 | 1 | 0.32 |
| OS315 ... 400_ | OSZT2A | 1SCA106534R1001 | 1 | 0.75 |
| OS600 ...800_ | OSZT3A | 1SCA106535R1001 | 1 | 1.2 |
| OS1200 ... 1250_ | OSZT4A | 1SCA106536R1001 | 1 | 2.0 |
| Interlocking in the OFF & ON positions | | | | |
| OS32G...160G | OTZT1L | 1SCA106527R1001 | 1 | 0.21 |
| OS200 ... 250_ | OSZT1L | 1SCA106538R1001 | 1 | 0.32 |
| OS315 ... 400_ | OSZT2L | 1SCA106539R1001 | 1 | 0.75 |
| OS600 ...800_ | OSZT3L | 1SCA106540R1001 | 1 | 1.2 |
| OS1200 ... 1250_ | OSZT4L | 1SCA106541R1001 | 1 | 2.0 |

## Coils

By installing a coil inside the housing of the interlock kit the switch can be interlocked electrically in the OFF position or both in the OFF and ON positions.
The electrical interlock works using the “closed circuit principle”, meaning that when the control voltage is not connected to the coil, the switches provided with A-type interlocks cannot be turned to the ON position and switches with L-type interlocks cannot be turned to the ON or OFF positions.

| Suitable for switches | Type | Order number | Units/ type [pcs] | Weight [kg] |
|---|---|---|---|---|
| AC coils | | | | |
| 24 VAC, 60 Hz | PDAL2/24AC60Hz | 1SCA111350R1001 | 1 | 0.15 |
| 110 VAC, 50Hz | PDAL2/110AC50Hz | 1SCA106543R1001 | 1 | 0.15 |
| 110 VAC, 60Hz | PDAL2/110AC60Hz | 1SCA107100R1001 | 1 | 0.15 |
| 120 VAC, 60 Hz | PDAL2/120AC60Hz | 1SCA111353R1001 | 1 | 0.15 |
| 208 VAC, 60Hz | PDAL2/208AC60Hz | 1SCA107101R1001 | 1 | 0.15 |
| 230 VAC, 50Hz | PDAL2/230AC50Hz | 1SCA107102R1001 | 1 | 0.15 |
| 240 VAC, 60 Hz | PDAL2/240AC60Hz | 1SCA111356R1001 | 1 | 0.15 |
| DC coils | | | | |
| 24 VDC | PDAL2/24DC | 1SCA106542R1001 | 1 | 0.15 |
| 48 VDC | PDAL2/48DC | 1SCA107103R1001 | 1 | 0.15 |
| 60 VDC | PDAL2/60DC | 1SCA107104R1001 | 1 | 0.15 |
| 110 VDC | PDAL2/110DC | 1SCA107105R1001 | 1 | 0.15 |
| 125 VDC | PDAL2/125DC | 1SCA111338R1001 | 1 | 0.15 |
| 220 VDC | PDAL2/220DC | 1SCA112503R1001 | 1 | 0.15 |

### Technical data for the coil

| | | |
|---|---|---|
| Operating voltage | | U=0.7...1.1 x $U_n$ |
| Operating ambient temperature | | -40°C...+65°C |
| Power consumption | with AC | 6.5 W |
| | with DC | 9 VA |

## Mounting accessories

**DIN-rail mounting kit**
For mounting a switch fuse into 35 mm DIN-rail

| Suitable for switches | Type | Order Number | Units/ type [pcs] | Weight [kg] |
|---|---|---|---|---|
| OS32G...160G, 1 - 4 -pole | OSGZD1 | 1SCA115688R1001 | 1 | 0.2 |

## OS Mini

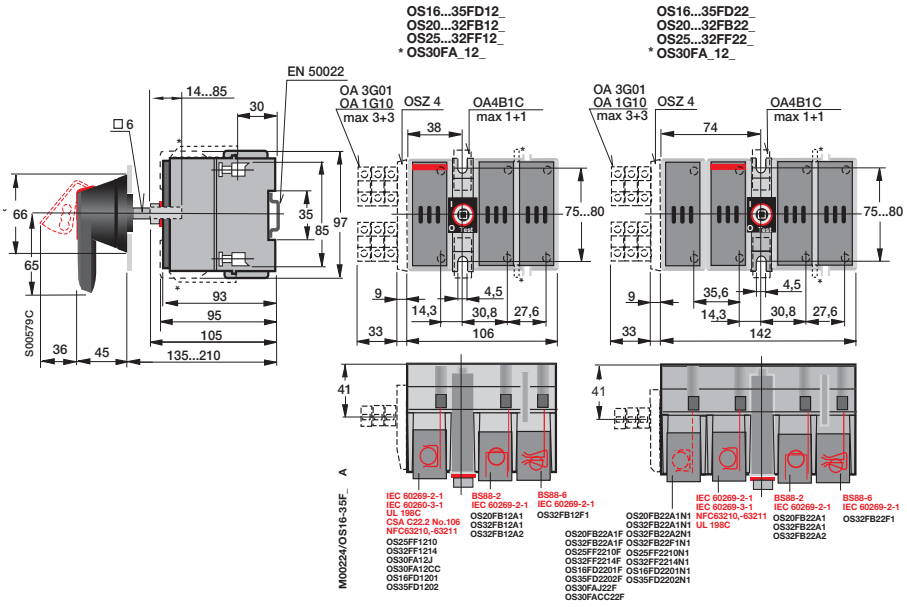


## OS 40 Mini

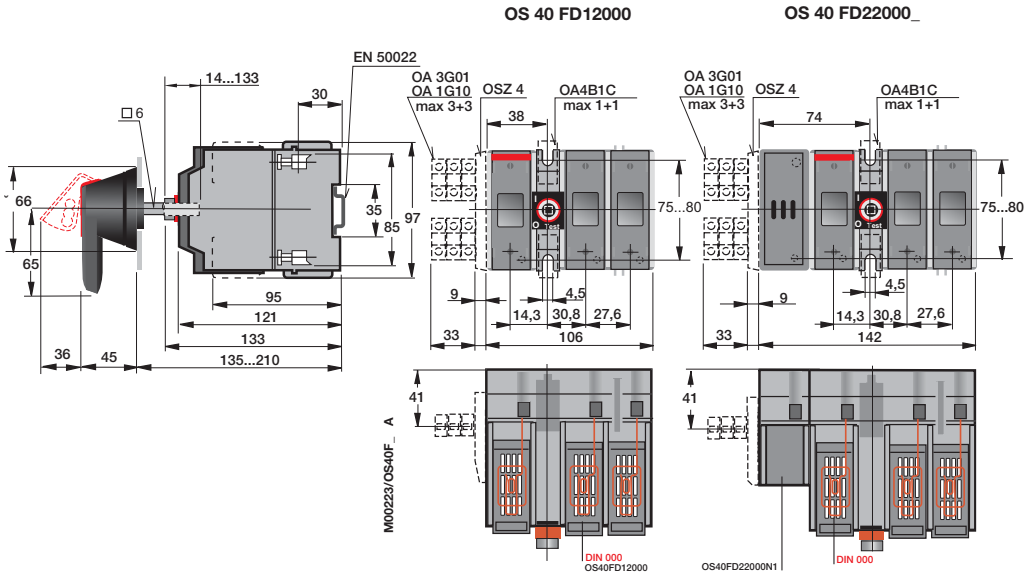

## OS32...63G_P

### Mechanism at the end of the switch fuse

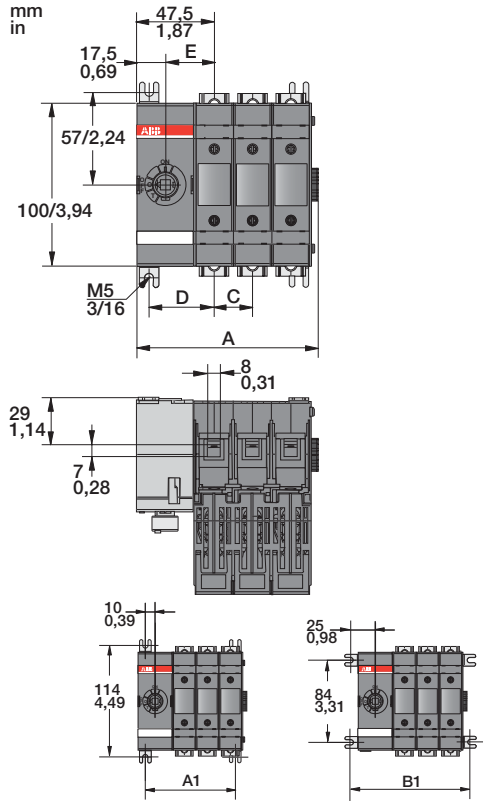


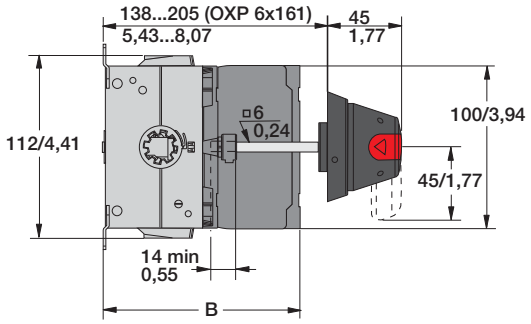


M00287/OS32-63G_01-04 A

| | OS32-63GD | | | | OS32-63GB/F | | | | OS60GJ | | | |
|---|---|---|---|---|---|---|---|---|---|---|---|---|
| | mm | | | | mm | | | | mm / in | | | |
| | D01 | D02 | D03 | D04 | B/F01 | B/F02 | B/F03 | B/F04 | J01 | J02 | J03 | J04 |
| A | 64,5 | 88 | 111,5 | 135,5 | 64,5 | 88 | 111,5 | 135,5 | 74,5/2,93 | 109,5/4,31 | 144,5/5,69 | 179,5/7,07 |
| B | 120,5 | 120,5 | 120,5 | 120,5 | 108,5 | 108,5 | 108,5 | 108,5 | 118/4,65 | 118/4,65 | 118/4,65 | 118/4,65 |
| C | - | 23,5 | 23,5 | 23,5 | - | 23,5 | 23,5 | 23,5 | - | 35/1,38 | 35/1,38 | 35/1,38 |
| D | 40 | 40 | 40 | 40 | 40 | 40 | 40 | 40 | 45,5/1,79 | 45,5/1,79 | 45,5/1,79 | 45,5/1,79 |
| E | 30 | 30 | 30 | 30 | 30 | 30 | 30 | 30 | 36/1,41 | 36/1,41 | 36/1,41 | 36/1,41 |
| A1 | 45 | 68,5 | 92 | 111,5 | 45 | 68,5 | 92 | 111,5 | 51/2,01 | 86/3,39 | 121/4,76 | 156/6,14 |
| B1 | 75 | 98,5 | 122 | 145,5 | 75 | 98,5 | 122 | 145,5 | 81/3,19 | 116/4,57 | 151/5,94 | 186/7,32 |

### Mechanism between the poles

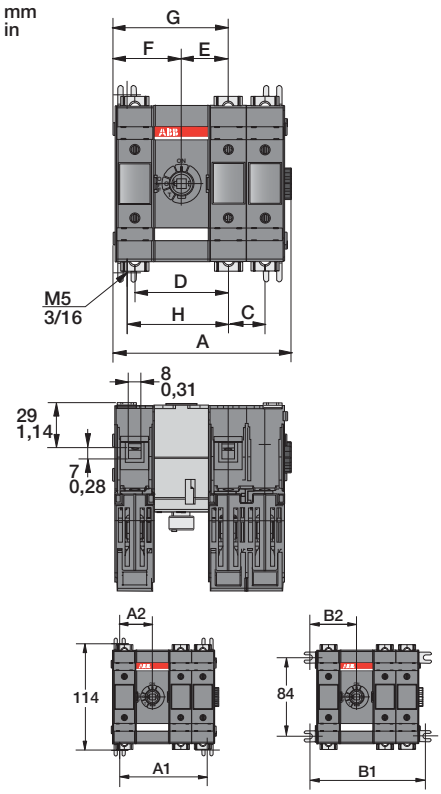


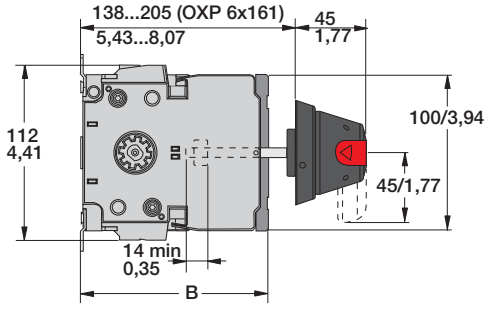


M00288/OS32-63G_11-22 A

| | OS32-63GD | | | | OS32-63GB/F | | | | OS60GJ | | | |
|---|---|---|---|---|---|---|---|---|---|---|---|---|
| | mm | | | | mm | | | | mm / in | | | |
| | D11 | D12 | D13 | D22 | B/F11 | B/F12 | B/F13 | B/F22 | J11 | J112 | J13 | J22 |
| A | 91 | 114,5 | 138 | 138 | 91 | 114,5 | 138 | 138 | 74,5/2,93 | 148/5,82 | 183,5/7,20 | 179,5/8,58 |
| B | 120,5 | 120,5 | 120,5 | 120,5 | 108,5 | 108,5 | 108,5 | 108,5 | 118/4,65 | 118/4,65 | 118/4,65 | 118/4,65 |
| C | - | 23,5 | 23,5 | 23,5 | - | 23,5 | 23,5 | 23,5 | - | 35/1,38 | 35/1,38 | 35/1,38 |
| D | 60 | 60 | 60 | 60 | 60 | 60 | 60 | 60 | 7 1,5/2,81 | 71,5/2,81 | 71,5/2,81 | 71,5/2,81 |
| E | 30 | 30 | 30 | 30 | 30 | 30 | 30 | 30 | 36/1,41 | 36/1,41 | 36/1,41 | 36/1,41 |
| F | 44 | 44 | 44 | 67,5 | 44 | 44 | 44 | 67,5 | 55,5/2,19 | 55,5/2,19 | 55,5/2,19 | 90,5/3,56 |
| G | 74 | 74 | 74 | 97,5 | 74 | 74 | 74 | 97,5 | 91,5/3,6 | 91,5/3,6 | 91,5/3,6 | 126,5/4,98 |
| A1 | 70 | 93,5 | 117 | 117 | 70 | 93,5 | 117 | 117 | 81,5/3,21 | 116,5/4,59 | 151,5/5,96 | 151,5/5,96 |
| A2 | 35 | 35 | 35 | 58,5 | 35 | 35 | 35 | 58,5 | 40,5/1,59 | 40,5/1,59 | 40,5/1,59 | 75,5/2,97 |
| B1 | 75 | 123,5 | 147 | 147 | 75 | 123,5 | 147 | 147 | 111,5/4,39 | 146,5/5,77 | 181,5/7,15 | 181,5/7,15 |
| B2 | 50 | 50 | 50 | 73,5 | 50 | 50 | 50 | 73,5 | 70,5/2,78 | 70,5/2,78 | 70,5/2,78 | 105,5/4,15 |

## OS100...160G_P

### Mechanism at the end of the switch fuse

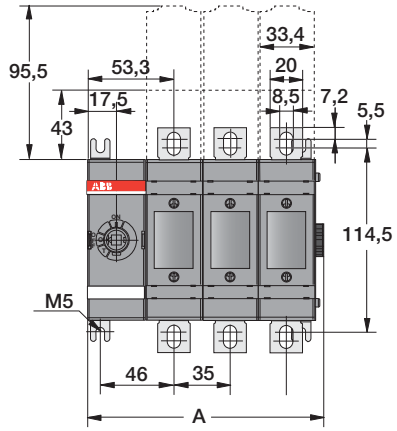


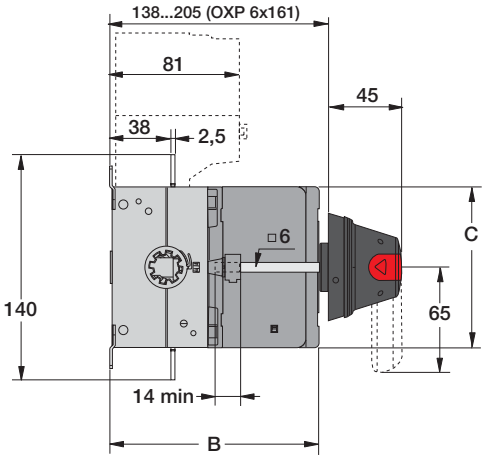


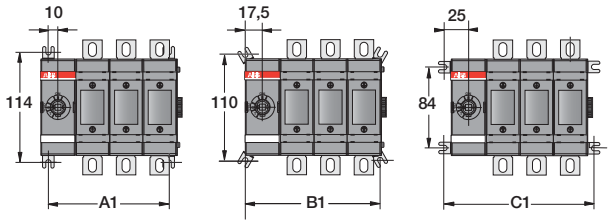


M00289/OS100-160G_01-04 A

| | OS100-160GD/F mm | | | | OS100-160GB mm | | | |
|---|---|---|---|---|---|---|---|---|
| | D/F01 | D/F02 | D/F03 | D/F04 | B01 | B02 | B03 | B04 |
| A | 76,5 | 111,5 | 146,5 | 181,5 | 76,5 | 111,5 | 146,5 | 181,5 |
| B | 130 | 130 | 130 | 130 | 114,5 | 114,5 | 114,5 | 114,5 |
| C | 100 | 100 | 100 | 100 | 118 | 118 | 118 | 118 |
| A1 | 55 | 90 | 125 | 160 | 55 | 90 | 125 | 160 |
| B1 | 70 | 105 | 140 | 175 | 70 | 105 | 140 | 175 |
| C1 | 85 | 120 | 155 | 190 | 85 | 120 | 155 | 190 |

### Mechanism between the poles

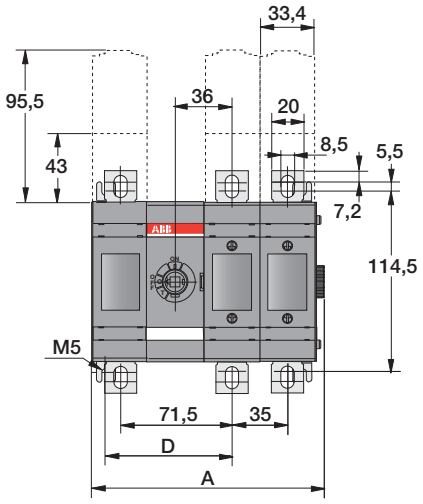


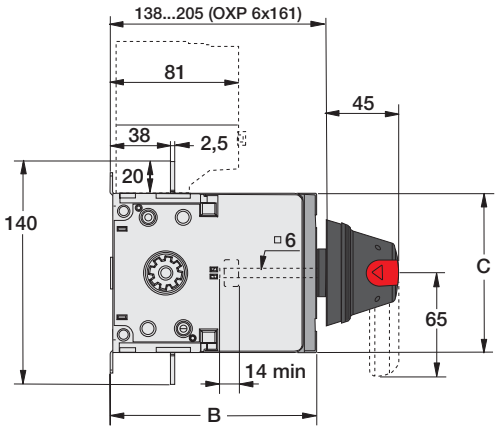


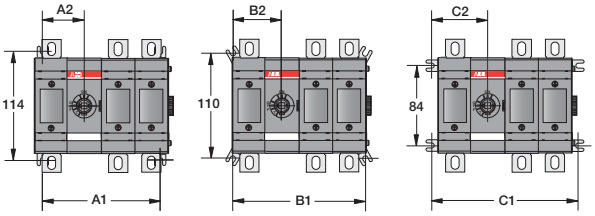


M00290/OS100-160G_11-22 A

| | OS100-160GD/F mm | | | | OS100-160GB mm | | | |
|---|---|---|---|---|---|---|---|---|
| | D/F11 | D/F12 | D/F13 | D/F22 | B11 | B12 | B13 | B22 |
| A | 113 | 148 | 183 | 183 | 113 | 148 | 183 | 183 |
| B | 130 | 130 | 130 | 130 | 114,5 | 114,5 | 114,5 | 114,5 |
| C | 100 | 100 | 100 | 100 | 118 | 118 | 118 | 118 |
| D | 81 | 81 | 81 | 116 | 81 | 81 | 81 | 116 |
| A1 | 90 | 125 | 160 | 160 | 90 | 125 | 160 | 160 |
| A2 | 45 | 45 | 45 | 80 | 45 | 45 | 45 | 80 |
| B1 | 105 | 140 | 175 | 175 | 105 | 140 | 175 | 175 |
| B2 | 52,5 | 52,5 | 52,5 | 87,5 | 52,5 | 52,5 | 52,5 | 87,5 |
| C1 | 120 | 155 | 190 | 190 | 120 | 155 | 190 | 190 |
| C2 | 60 | 60 | 60 | 95 | 60 | 60 | 60 | 95 |

## OS 200_P and OS 250_P

### Mechanism at the end of the switch fuse

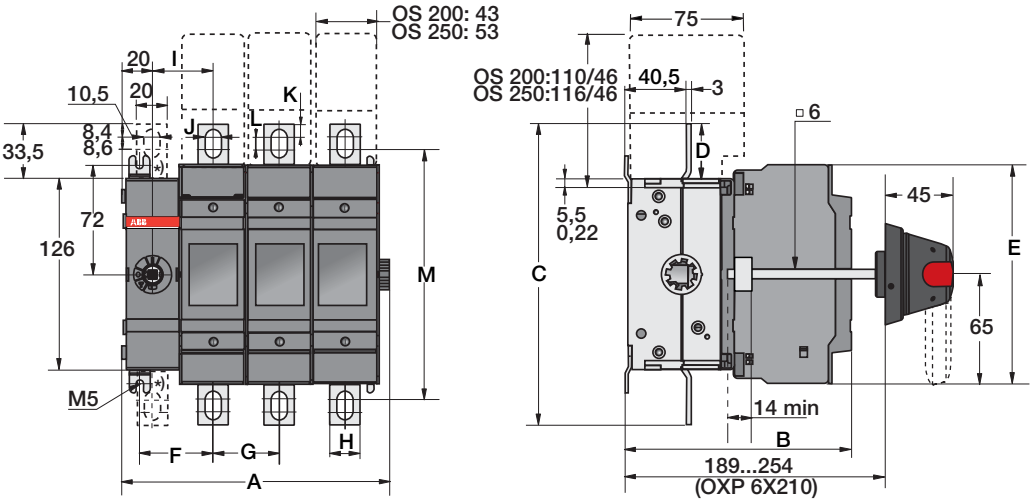


*) OS_N3

M00008/OS200_250_01_04 H

| | OS200 | | | | | | | | OS250 | | | |
|---|---|---|---|---|---|---|---|---|---|---|---|---|
| | D01 | B01 | D02 | B02 | D03 | B03 | D04 | B04 | D01/B01 | D02/B02 | D03/B03 | D04/B04 |
| A | 89,5 | 89,5 | 133 | 133 | 176,5 | 176,5 | 220 | 220 | 99,5 | 153,5 | 207,5 | 261,5 |
| B | 149 | 130 | 149 | 130 | 149 | 130 | 149 | 149 | 154 | 154 | 154 | 154 |
| C | 198,5 | 198,5 | 198,5 | 198,5 | 198,5 | 198,5 | 198,5 | 198,5 | 193 | 193 | 193 | 193 |
| D | 36,5 | 36,5 | 36,5 | 36,5 | 36,5 | 36,5 | 36,5 | 36,5 | 33,5 | 33,5 | 33,5 | 33,5 |
| E | 144,5 | 144,5 | 144,5 | 144,5 | 144,5 | 144,5 | 144,5 | 144,5 | 148,5 | 148,5 | 148,5 | 148,5 |
| F | 48,5 | 48,5 | 48,5 | 48,5 | 48,5 | 48,5 | 48,5 | 48,5 | 53,5 | 53,5 | 53,5 | 53,5 |
| G | - | - | 43,5 | 43,5 | 43,5 | 43,5 | 43,5 | 43,5 | - | 54 | 54 | 54 |
| H | 20 | 20 | 20 | 20 | 20 | 20 | 20 | 20 | 25 | 25 | 25 | 25 |
| I | 40 | 40 | 40 | 40 | 40 | 40 | 40 | 40 | 45 | 45 | 45 | 45 |
| J | 10 | 10 | 10 | 10 | 10 | 10 | 10 | 10 | 11 | 11 | 11 | 11 |
| K | 8,4 | 8,4 | 8,4 | 8,4 | 8,4 | 8,4 | 8,4 | 8,4 | 11,5 | 11,5 | 11,5 | 11,5 |
| L | 8,6 | 8,6 | 8,6 | 8,6 | 8,6 | 8,6 | 8,6 | 8,6 | 4 | 4 | 4 | 4 |
| M | 164,5 | 164,5 | 164,5 | 164,5 | 164,5 | 164,5 | 164,5 | 164,5 | 162 | 162 | 162 | 162 |
| A1 | 60,5 | 60,5 | 104 | 104 | 147,5 | 147,5 | 191 | 191 | 70,5 | 124,5 | 178,5 | 232,5 |
| B1 | 79,5 | 79,5 | 123 | 123 | 166,5 | 166,5 | 210 | 210 | 89,5 | 143,5 | 197,5 | 251,5 |
| C1 | 96,5 | 96,5 | 140 | 140 | 183,5 | 183,5 | 227 | 227 | 106,5 | 160,5 | 214,5 | 268,5 |

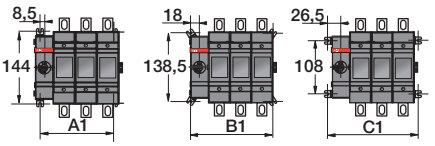


### Mechanism between the poles

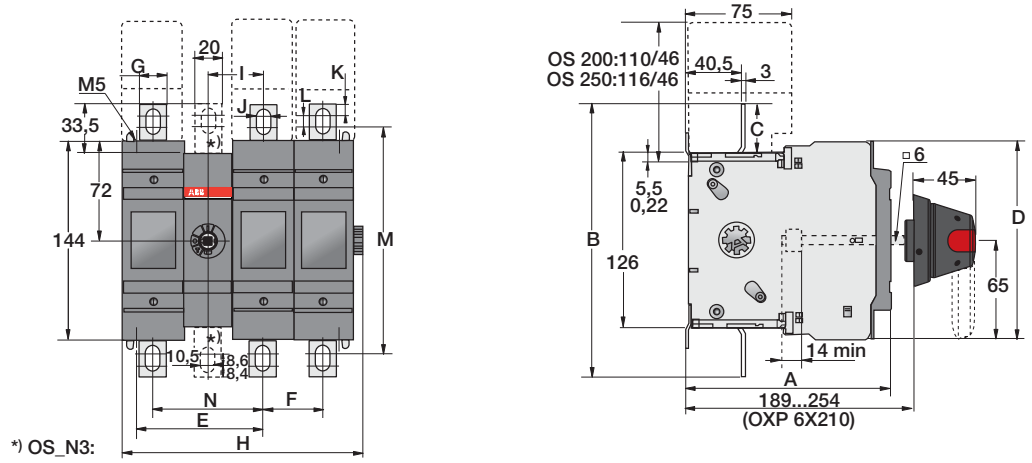


M00014/OS200_250_11_22 H

| | OS200 | | | | | | | OS250 | | | |
|---|---|---|---|---|---|---|---|---|---|---|---|
| | D11 | B11 | D12 | B12 | D13 | B13 | D22 | B22 | D11 | D12 | D13 | D22 |
| A | 149 | 130 | 149 | 130 | 141 | 130 | 149 | 130 | 154 | 154 | 154 | 154 |
| B | 199 | 199 | 199 | 199 | 199 | 199 | 199 | 199 | 193 | 193 | 193 | 193 |
| C | 36,5 | 36,5 | 36,3 | 36,5 | 36,5 | 36,5 | 36,5 | 36,5 | 33,5 | 33,5 | 33,5 | 33,5 |
| D | 144,5 | 144,5 | 144,5 | 144,5 | 144,5 | 144,5 | 144,5 | 144,5 | 148,5 | 148,5 | 148,5 | 148,5 |
| E | 92 | 92 | 92 | 92 | 92 | 92 | 135,5 | 135,5 | 112,5 | 112,5 | 112,5 | 161 |
| F | 43,5 | 43,5 | 43,5 | 43,5 | 43,5 | 43,5 | 43,5 | 43,5 | 54 | 54 | 54 | 54 |
| G | 20 | 20 | 20 | 20 | 20 | 20 | 20 | 20 | 25 | 25 | 25 | 25 |
| H | 132 | 132 | 175,5 | 175,5 | 219 | 219 | 219 | 219 | 152 | 206 | 260 | 260 |
| I | 40 | 40 | 40 | 40 | 40 | 40 | 40 | 40 | 45 | 45 | 45 | 45 |
| J | 10 | 10 | 10 | 10 | 10 | 10 | 10 | 10 | 11 | 11 | 11 | 11 |
| K | 8,4 | 8,4 | 8,4 | 8,4 | 8,4 | 8,4 | 8,4 | 8,4 | 11,5 | 11,5 | 11,5 | 11,5 |
| L | 8,6 | 8,6 | 8,6 | 8,6 | 8,6 | 8,6 | 8,6 | 8,6 | 4 | 4 | 4 | 4 |
| M | 165 | 165 | 165 | 165 | 165 | 165 | 165 | 165 | 162 | 162 | 162 | 162 |
| N | 80 | 80 | 80 | 80 | 80 | 80 | 80 | 80 | 90 | 90 | 90 | 90 |
| A1 | 104 | 104 | 147,5 | 147,5 | 191 | 191 | 191 | 191 | 124 | 178 | 232 | 232 |
| A2 | 52 | 52 | 52 | 52 | 52 | 52 | 95,5 | 95,5 | 62 | 62 | 62 | 116 |
| B1 | 123 | 123 | 166,5 | 166,5 | 210 | 210 | 210 | 210 | 143 | 197 | 251 | 251 |
| B2 | 61,5 | 61,5 | 61,5 | 61,5 | 61,5 | 61,5 | 105 | 105 | 71,5 | 71,5 | 71,5 | 125,5 |
| C1 | 140 | 140 | 183,5 | 183,5 | 227 | 227 | 227 | 227 | 160 | 214 | 268 | 268 |
| C2 | 70 | 70 | 70 | 70 | 70 | 70 | 113,5 | 113,5 | 80 | 80 | 80 | 134 |

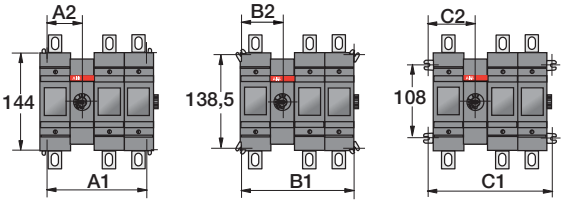

# OS 315_P and OS 400_P

## Mechanism at the end of the switch fuse

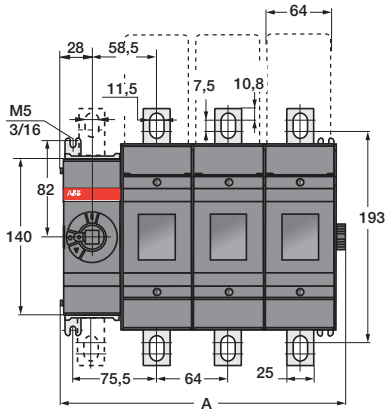


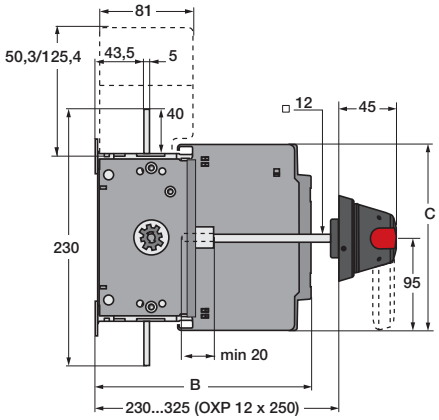


C000014 /OS315_400_001_04 A

| | OS315 | | | | OS400 | | | | | | | |
|---|---|---|---|---|---|---|---|---|---|---|---|---|
| | B01 | B02 | B03 | B04 | B01 | B02 | B03 | B04 | D01 | D02 | D03 | D04 |
| | mm | mm | mm | mm | mm | mm | mm | mm | mm | mm | mm | mm |
| A | 127 | 191 | 255 | 319 | 127 | 191 | 255 | 319 | 127 | 191 | 255 | 319 |
| B | 176 | 176 | 176 | 176 | 176 | 176 | 176 | 176 | 193 | 193 | 193 | 193 |
| C | 194 | 194 | 194 | 194 | 194 | 194 | 194 | 194 | 166 | 166 | 166 | 166 |

| | OS315 | | | | OS400 | | | |
|---|---|---|---|---|---|---|---|---|
| | B01 | B02 | B03 | B04 | B01/D01 | B02/D02 | B03/D03 | B04/D04 |
| | mm | mm | mm | mm | mm | mm | mm | mm |
| A1 | 98.5 | 162.5 | 226.5 | 290.5 | 98.5 | 162.5 | 226.5 | 290.5 |
| B1 | 116.5 | 180.5 | 244.5 | 308.5 | 116.5 | 180.5 | 244.5 | 308.5 |
| C1 | 134.5 | 198.5 | 262.5 | 326.5 | 134.5 | 198.5 | 262.5 | 326.5 |

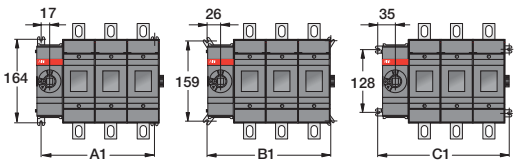


## Mechanism between the poles

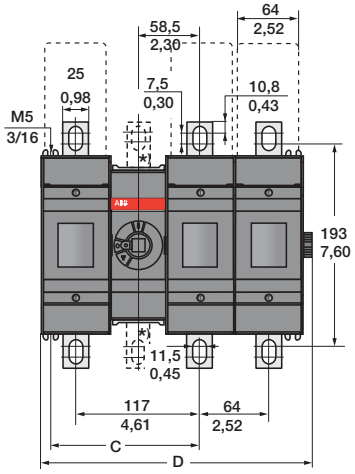


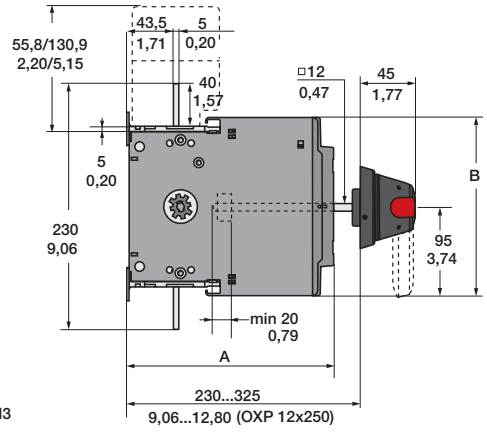


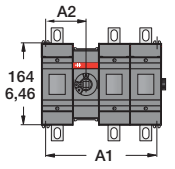


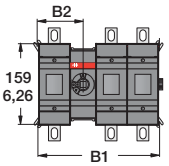


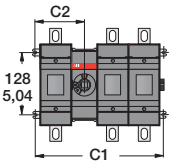


C000011/OS315-400_11_22 B

| | OS315-400 | | | | | OS400 | | | | | | | | | |
|---|---|---|---|---|---|---|---|---|---|---|---|---|---|---|---|
| | B11 | B12 | B13 | B21 | B22 | D11 | D12 | D13 | D21 | D22 | J11 | J12 | J13 | J21 | J22 |
| | mm | mm | mm | mm | mm | mm | mm | mm | mm | mm | mm/in | mm/in | mm/in | mm/in | mm/in |
| A | 176 | 176 | 176 | 176 | 176 | 193 | 193 | 193 | 193 | 193 | 176 / 6,93 | 176 / 6,93 | 176 / 6,93 | 176 / 6,93 | 176 / 6,93 |
| B | 194 | 194 | 194 | 194 | 194 | 166 | 166 | 166 | 166 | 166 | 194 / 7,64 | 194 / 7,64 | 194 / 7,64 | 194 / 7,64 | 194 / 7,64 |
| C | 140 | 140 | 140 | 204 | 204 | 140 | 140 | 140 | 204 | 204 | 140 / 5,51 | 140 / 5,51 | 140 / 5,51 | 204 / 8,03 | 204 / 8,03 |
| D | 190 | 254 | 318 | 254 | 318 | 190 | 254 | 318 | 254 | 318 | 190 / 7,48 | 254 / 10,00 | 318 / 12,52 | 254 / 10,00 | 318 / 12,52 |

| | OS315 | | | | | OS400 | | | | |
|---|---|---|---|---|---|---|---|---|---|---|
| | B11 | B12 | B21 | B22 | B13 | B11/D11/J11 | B12/D12/J12 | B21/D21/J21 | B22/D22/J22 | B13/D13/J13 |
| | mm | mm | mm | mm | mm | mm/in | mm/in | mm/in | mm/in | mm/in |
| A1 | 163 | 227 | 227 | 291 | 291 | 163/6,42 | 227/8,94 | 227/8,94 | 291/11,46 | 291/11,46 |
| A2 | 81.5 | 81.5 | 145.5 | 145.5 | 81.5 | 81,5/3.21 | 81,5/3.21 | 145,5/5,73 | 145,5/5,73 | 81,5/3.21 |
| B1 | 181 | 245 | 245 | 309 | 309 | 181/7,13 | 245/9,65 | 245/9,65 | 309/12,17 | 309/12,17 |
| B2 | 90.5 | 90.5 | 154.5 | 154.5 | 90.5 | 90,5/3,56 | 90,5/3,56 | 154,5/6,08 | 154,5/6,08 | 90,5/3,56 |
| C1 | 199 | 263 | 263 | 327 | 327 | 199/7,83 | 263/10,35 | 263/10,35 | 327/12,87 | 327/12,87 |
| C2 | 99.5 | 99.5 | 163.5 | 163.5 | 99.5 | 99,5/3,92 | 99,5/3,92 | 163,5/6,44 | 163,5/6,44 | 99,5/3,92 |

## OS 630_P and OS 800_P

### Mechanism at the end of the switch fuse

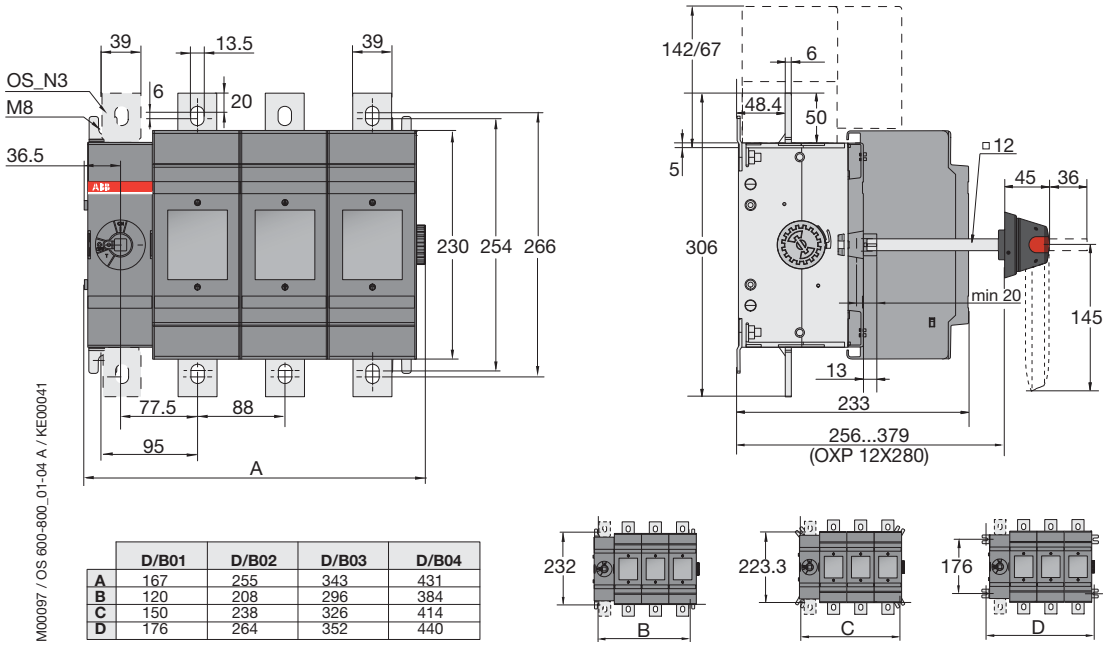


| | D/B01 | D/B02 | D/B03 | D/B04 |
|---|---|---|---|---|
| A | 167 | 255 | 343 | 431 |
| B | 120 | 208 | 296 | 384 |
| C | 150 | 238 | 326 | 414 |
| D | 176 | 264 | 352 | 440 |

### Mechanism between the poles

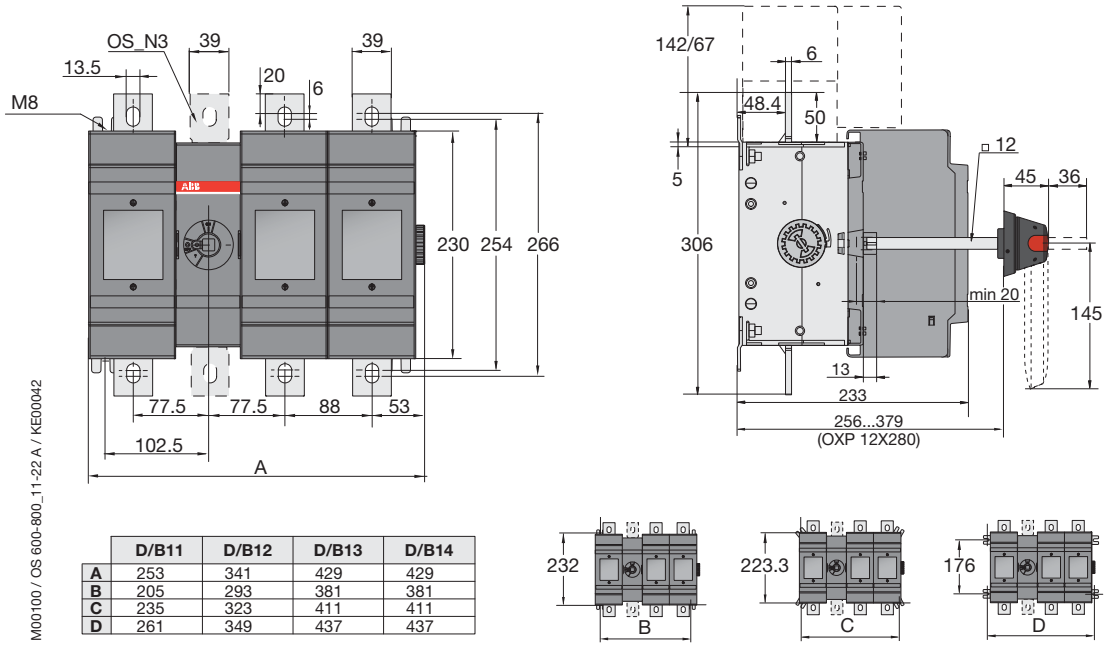


| | D/B11 | D/B12 | D/B13 | D/B14 |
|---|---|---|---|---|
| A | 253 | 341 | 429 | 429 |
| B | 205 | 293 | 381 | 381 |
| C | 235 | 323 | 411 | 411 |
| D | 261 | 349 | 437 | 437 |

## OS 1250_P

### Mechanism at the end of the switch fuse

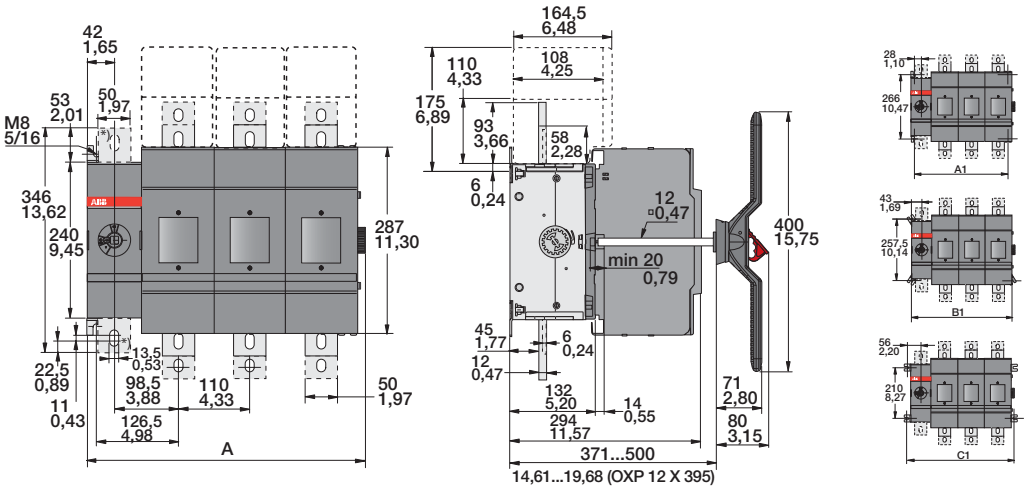


*) N3- types

M00207/OS1200-1250_01-04 A

| | OS1200/1250 | | | |
|---|---|---|---|---|
| | D/L /B01 | D/L /B02 | D/L /B03 | D/L /B04 |
| | mm / in | mm / in | mm / in | mm / in |
| A | 209 / 8,23 | 319 / 12,56 | 429 / 16,89 | 539 / 21,22 |
| A1 | 166 / 6,54 | 276 / 10,87 | 386 / 15,20 | 496 / 19,53 |
| B1 | 196 / 7,72 | 306 / 12,05 | 416 / 16,38 | 526 / 20,71 |
| C1 | 222 / 8,74 | 332 / 13,07 | 442 / 17,40 | 552 / 21,73 |

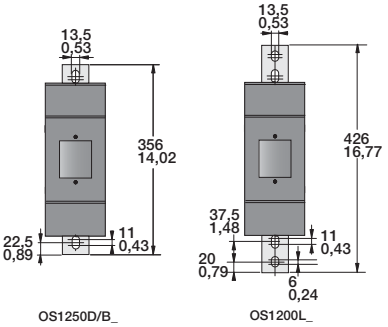


### Mechanism between the poles

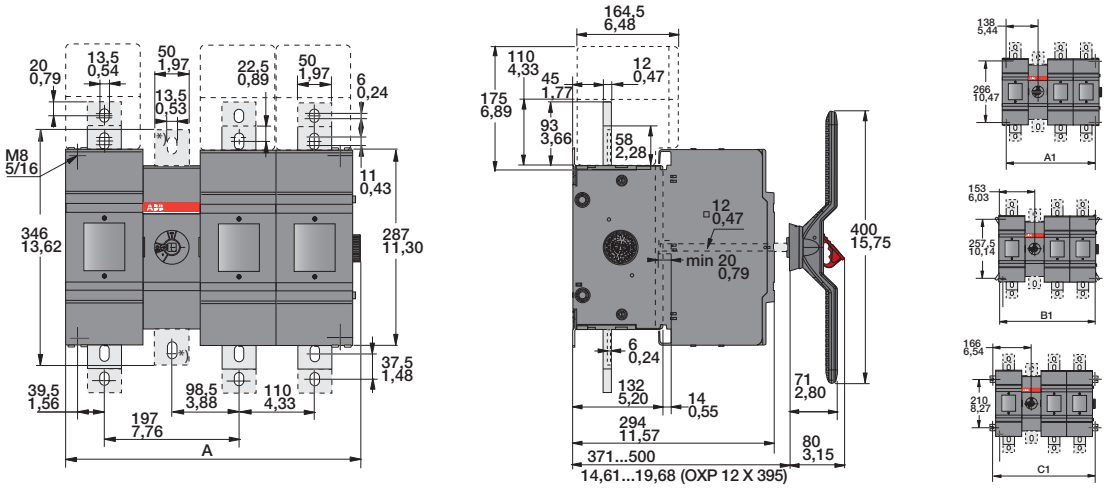


*) N3- types

M00208/OS1200-1250_11-22 A

| | OS1200/1250 | | | |
|---|---|---|---|---|
| | D/L /B11 | D/L /B12 | D/L /B13 | D/L /B22 |
| | mm / in | mm / in | mm / in | mm / in |
| A | 322 / 12,68 | 432 / 17,01 | 542 / 21,34 | 542 / 21,34 |
| A1 | 276 / 10,87 | 386 / 15,20 | 496 / 19,53 | 496 / 19,53 |
| B1 | 306 / 12,05 | 416 / 16,38 | 526 / 20,71 | 526 / 20,71 |
| C1 | 322 / 13,07 | 442 / 17,40 | 552 / 21,73 | 552 / 21,73 |

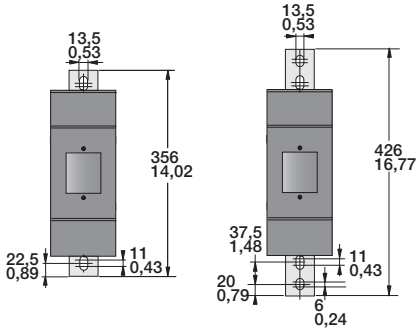

## OS100GJ_

### Mechanism at the end of the switch fuse

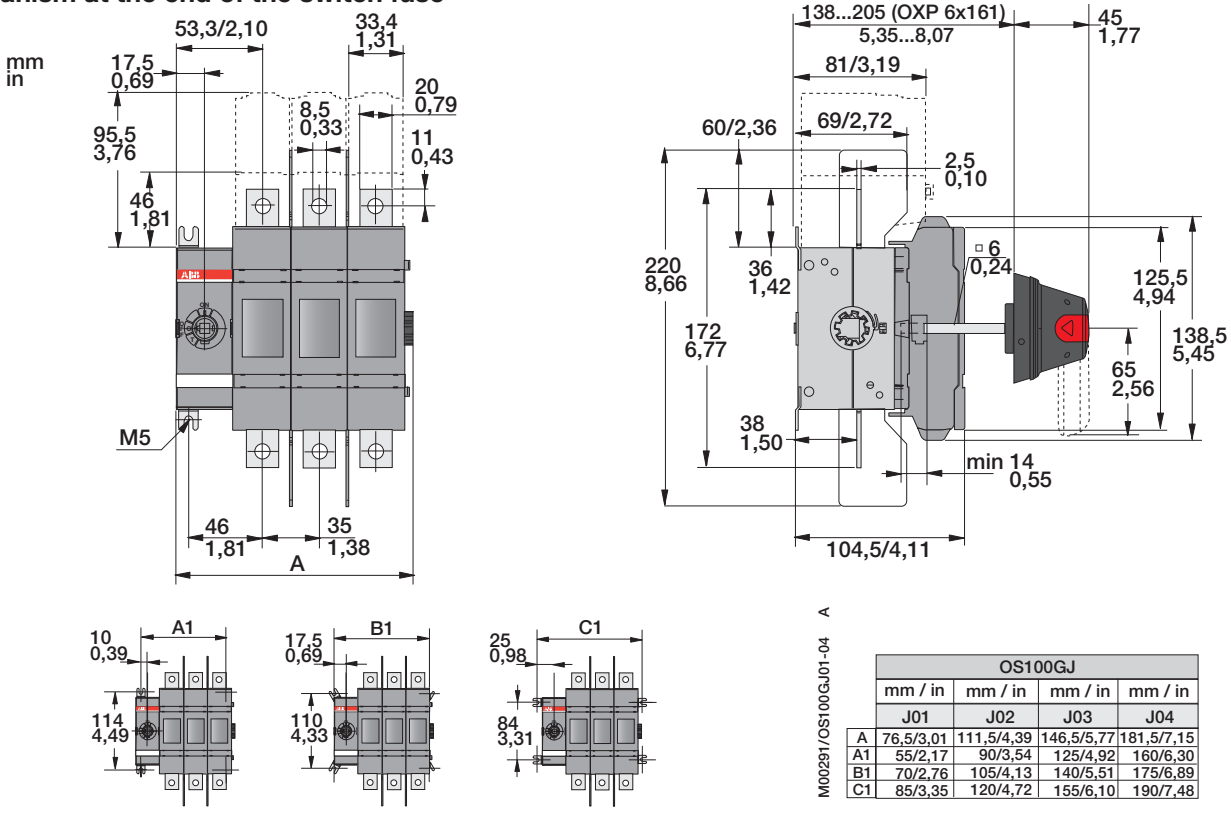


M00291/OS100GJ01-04 A

| | OS100GJ | | | |
|---|---|---|---|---|
| | mm / in | mm / in | mm / in | mm / in |
| | J01 | J02 | J03 | J04 |
| A | 76,5/3,01 | 111,5/4,39 | 146,5/5,77 | 181,5/7,15 |
| A1 | 55/2,17 | 90/3,54 | 125/4,92 | 160/6,30 |
| B1 | 70/2,76 | 105/4,13 | 140/5,51 | 175/6,89 |
| C1 | 85/3,35 | 120/4,72 | 155/6,10 | 190/7,48 |

**The measurements in the dimension drawings are preliminary and may be altered.**

### Mechanism between the poles

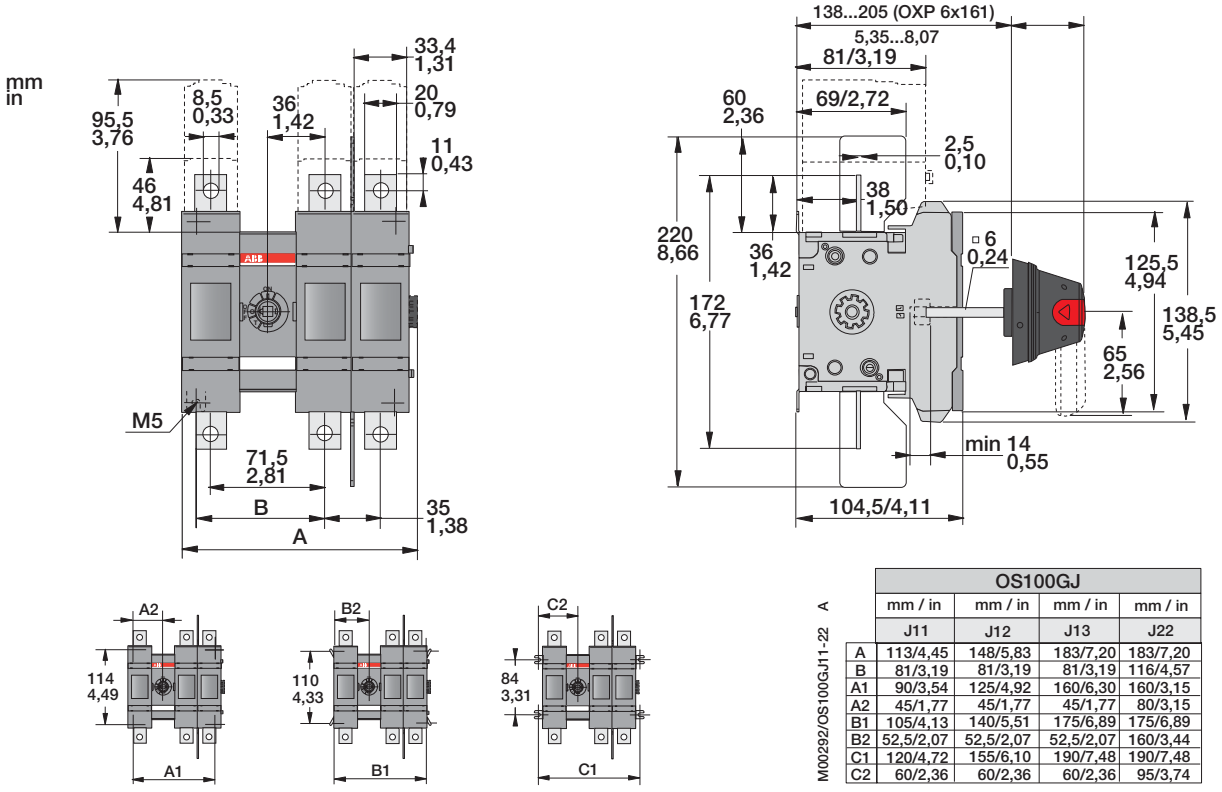


M00292/OS100GJ11-22 A

| | OS100GJ | | | |
|---|---|---|---|---|
| | mm / in | mm / in | mm / in | mm / in |
| | J11 | J12 | J13 | J22 |
| A | 113/4,45 | 148/5,83 | 183/7,20 | 183/7,20 |
| B | 81/3,19 | 81/3,19 | 81/3,19 | 116/4,57 |
| A1 | 90/3,54 | 125/4,92 | 160/6,30 | 160/3,15 |
| A2 | 45/1,77 | 45/1,77 | 45/1,77 | 80/3,15 |
| B1 | 105/4,13 | 140/5,51 | 175/6,89 | 175/6,89 |
| B2 | 52,5/2,07 | 52,5/2,07 | 52,5/2,07 | 160/3,44 |
| C1 | 120/4,72 | 155/6,10 | 190/7,48 | 190/7,48 |
| C2 | 60/2,36 | 60/2,36 | 60/2,36 | 95/3,74 |

## OS 200J

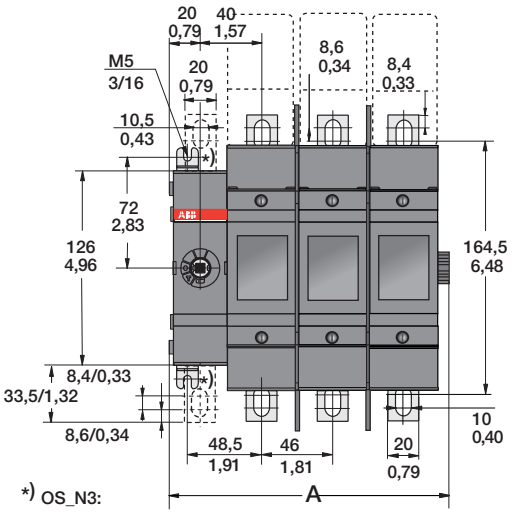


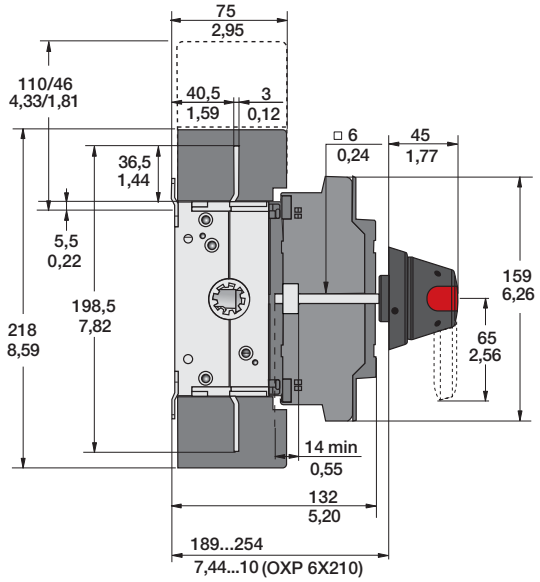


M00001/OS200J01_04 H

| | OS200J01 | OS200J02 | OS200J03 | OS200J04 |
|---|---|---|---|---|
| | mm/ in | mm/ in | mm/ in | mm/ in |
| A | 89,5 / 3,52 | 135,5 / 5,34 | 181,5 / 7,15 | 227,5 / 8,96 |
| A1 | 60,5 / 2,38 | 106,5 / 4,19 | 152,5 / 6,00 | 198,5 / 7,82 |
| B1 | 79,5 / 3,13 | 125,5 / 4,94 | 171,5 / 6,75 | 217,5 / 8,56 |
| C1 | 96,5 / 3,80 | 142,5 / 5,61 | 188,5 / 7,42 | 234,5 / 9,23 |

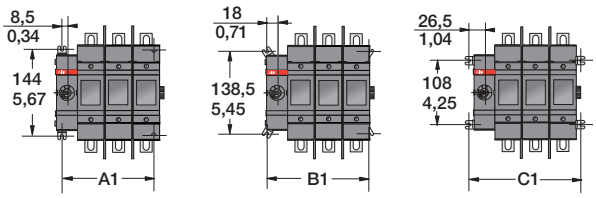


## OS 400J

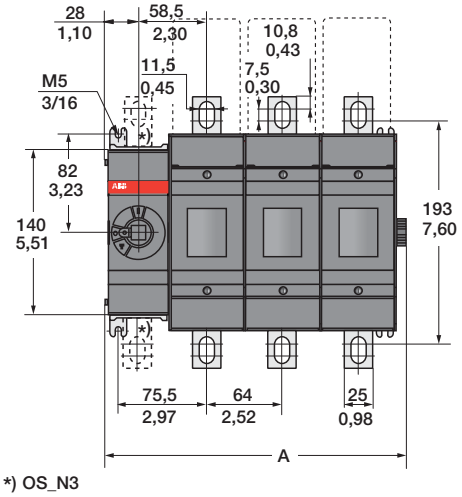


*) OS_N3

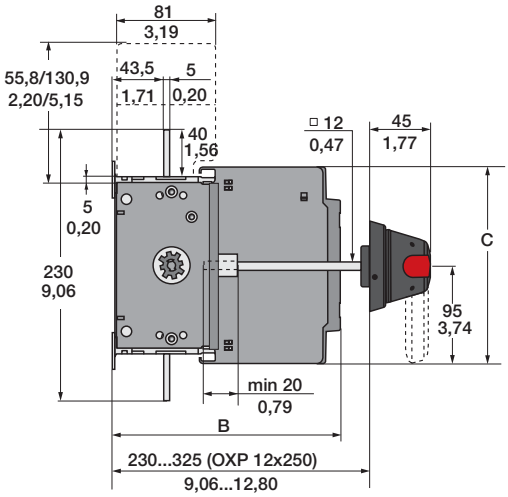


C000012 /OS315_400_01_04 B

| | OS315 - 400 | | | | OS400 | | | | | | | |
|---|---|---|---|---|---|---|---|---|---|---|---|---|
| | B01 | B02 | B03 | B04 | D01 | D02 | D03 | D04 | J01 | J02 | J03 | J04 |
| | mm | mm | mm | mm | mm | mm | mm | mm | mm/in | mm/in | mm/in | mm/in |
| A | 127 | 191 | 255 | 319 | 127 | 191 | 255 | 319 | 127/5,00 | 191/7,52 | 255/10,04 | 319/12,56 |
| B | 176 | 176 | 176 | 176 | 193 | 193 | 193 | 193 | 176/6,93 | 176/6,93 | 176/6,93 | 176/6,93 |
| C | 194 | 194 | 194 | 194 | 166 | 166 | 166 | 166 | 194/7,64 | 194/7,64 | 194/7,64 | 194/7,64 |

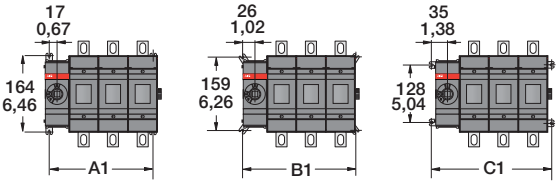


| | OS315 | | | | OS400 | | | |
|---|---|---|---|---|---|---|---|---|
| | B01 | B02 | B03 | B04 | B01/D01/J01 | B02/D02/J02 | B03/D03/J03 | B04/D04/J04 |
| | mm | mm | mm | mm | mm/in | mm/in | mm/in | mm/in |
| A1 | 98.5 | 162.5 | 226.5 | 290.5 | 98.5/3,88 | 162.5/6,40 | 226.5/8,92 | 290.5/11,44 |
| B1 | 116.5 | 180.5 | 244.5 | 308.5 | 116.5/4,59 | 180.5/7,11 | 244.5/9,63 | 308.5/12,15 |
| C1 | 134.5 | 198.5 | 262.5 | 326.5 | 134.5/5,30 | 198.5/7,81 | 262.5/10,33 | 326.5/12,85 |

# Front operated switch fuses
# Dimension drawings

## OS 600J and 800L

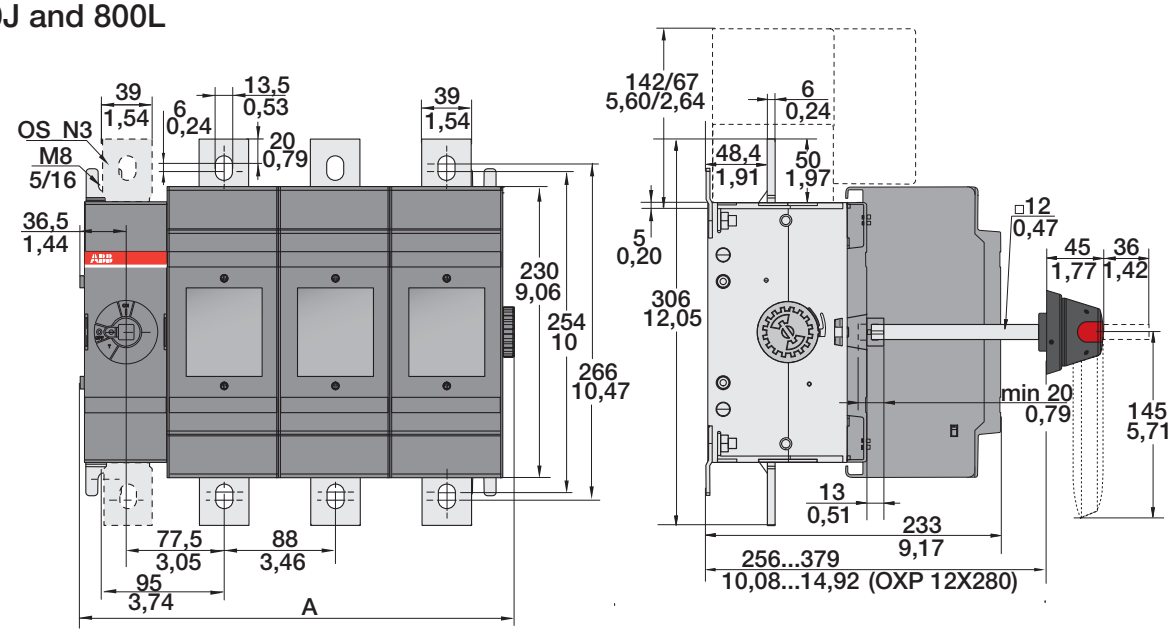


M00097 / OS 600-800_01-04 B

| | D/B/J/L01 | D/B/J/L02 | D/B/J/L03 | D/B/J/L04 |
|---|---|---|---|---|
| A | 167/6,57 | 255/10,04 | 343/13,50 | 431/16,97 |
| B | 120/4,72 | 208/8,19 | 296/11,65 | 384/15,12 |
| C | 150/5,91 | 238/9,37 | 326/12,83 | 414/16,30 |
| D | 176/6,93 | 264/10,39 | 352/13,86 | 440/17,32 |

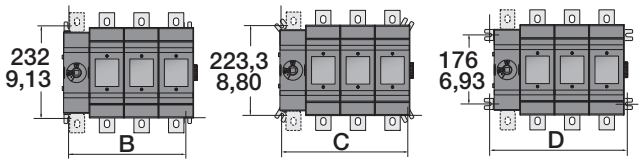


## OS 1200L

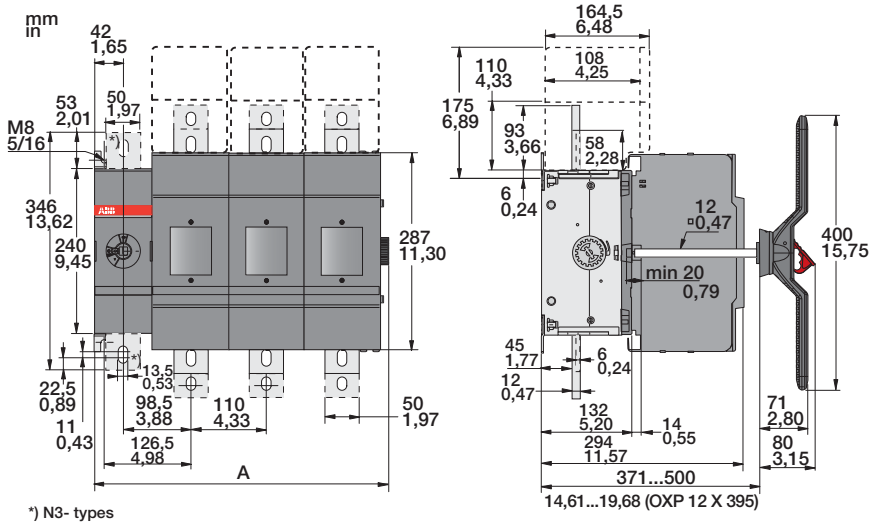


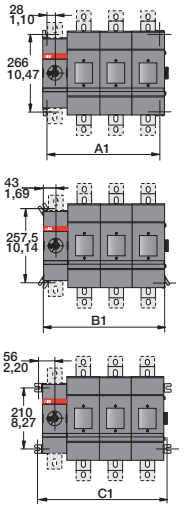


M00207/OS1200-1250_01-04 A

| | OS1200 | | | |
|---|---|---|---|---|
| | D/L /B01 | D/L /B02 | D/L /B03 | D/L /B04 |
| | mm / in | mm / in | mm / in | mm / in |
| A | 209 / 8,23 | 319 / 12,56 | 429 / 16,89 | 539 / 21,22 |
| A1 | 166 / 6,54 | 276 / 10,87 | 386 / 15,20 | 496 / 19,53 |
| B1 | 196 / 7,72 | 306 / 12,05 | 416 / 16,38 | 526 / 20,71 |
| C1 | 222 / 8,74 | 332 / 13,07 | 442 / 17,40 | 552 / 21,73 |

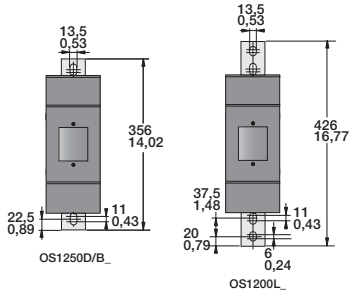

## OS 200_K and OS 250_K

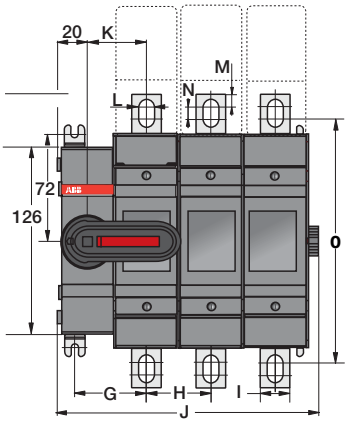


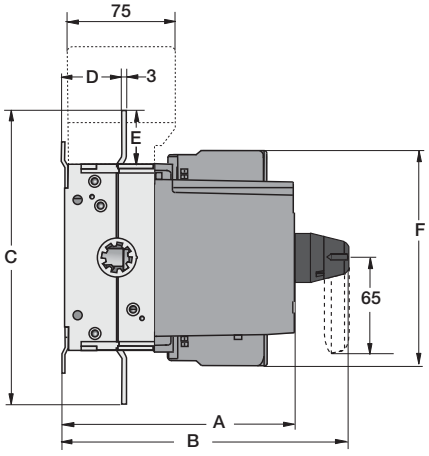


M00080/OS 200_250_01_04K C

| | OS200 K | | | | | | | | OS250 K | | | |
|---|---|---|---|---|---|---|---|---|---|---|---|---|
| | D01 | B01 | D02 | B02 | D03 | B03 | D04 | B04 | D01/B01 | D02/B02 | D03/B03 | D04/B04 |
| A | 154 | 130 | 154 | 130 | 154 | 130 | 154 | 130 | 154 | 154 | 154 | 154 |
| B | 191 | 167 | 191 | 167 | 191 | 167 | 191 | 167 | 191 | 191 | 191 | 191 |
| C | 198,5 | 198,5 | 198,5 | 198,5 | 198,5 | 198,5 | 198,5 | 198,5 | 193 | 193 | 193 | 193 |
| D | 40,5 | 40,5 | 40,5 | 40,5 | 40,5 | 40,5 | 40,5 | 40,5 | 40,5 | 40,5 | 40,5 | 40,5 |
| E | 36,5 | 36,5 | 36,5 | 36,5 | 36,5 | 36,5 | 36,5 | 36,5 | 33,5 | 33,5 | 33,5 | 33,5 |
| F | 144,5 | 144,5 | 144,5 | 144,5 | 144,5 | 144,5 | 144,5 | 144,5 | 148,5 | 148,5 | 148,5 | 148,5 |
| G | 48,5 | 48,5 | 48,5 | 48,5 | 48,5 | 48,5 | 48,5 | 48,5 | 53,5 | 53,5 | 53,5 | 53,5 |
| H | - | - | 43,5 | 43,5 | 43,5 | 43,5 | 43,5 | 43,5 | - | 54 | 54 | 54 |
| I | 20 | 20 | 20 | 20 | 20 | 20 | 20 | 20 | 25 | 25 | 25 | 25 |
| J | 89,5 | 89,5 | 133 | 133 | 176,5 | 176,5 | 220 | 220 | 99,5 | 153,5 | 207,5 | 261,5 |
| K | 40 | 40 | 40 | 40 | 40 | 40 | 40 | 40 | 45 | 45 | 45 | 45 |
| L | 10 | 10 | 10 | 10 | 10 | 10 | 10 | 10 | 11 | 11 | 11 | 11 |
| M | 8,5 | 8,5 | 8,5 | 8,5 | 8,5 | 8,5 | 8,5 | 8,5 | 11,5 | 11,5 | 11,5 | 11,5 |
| N | 8,5 | 8,5 | 8,5 | 8,5 | 8,5 | 8,5 | 8,5 | 8,5 | 4 | 4 | 4 | 4 |
| O | 164,5 | 164,5 | 164,5 | 164,5 | 164,5 | 164,5 | 164,5 | 164,5 | 162 | 162 | 162 | 162 |

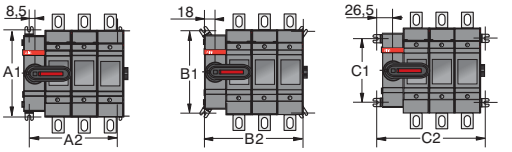


| | OS200K | | | | OS250K | | | |
|---|---|---|---|---|---|---|---|---|
| | D01/B01 | D02/B02 | D03/B03 | D04/B04 | D01 | D02 | D03 | D04 |
| A1 | 144 | 144 | 144 | 144 | 144 | 144 | 144 | 144 |
| A2 | 60,5 | 104 | 147,5 | 191 | 70,5 | 124,5 | 178,5 | 232,5 |
| B1 | 138,5 | 138,5 | 138,5 | 138,5 | 138,5 | 138,5 | 138,5 | 138,5 |
| B2 | 79,5 | 123 | 166,5 | 210 | 89,5 | 143,5 | 197,5 | 251,5 |
| C1 | 108 | 108 | 108 | 108 | 108 | 108 | 108 | 108 |
| C2 | 96,5 | 140 | 183,5 | 227 | 106,5 | 160,5 | 214,5 | 268,5 |

## OS 315_K and OS 400_K

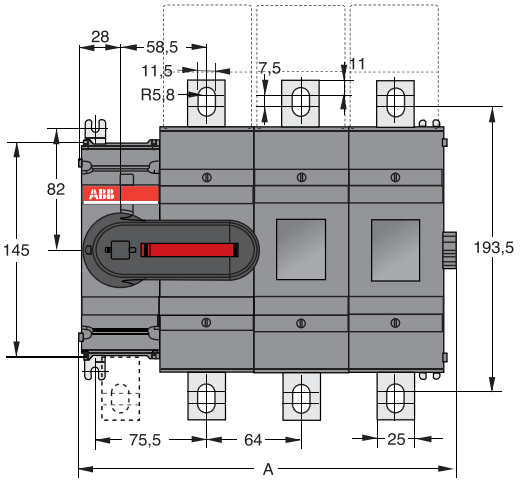


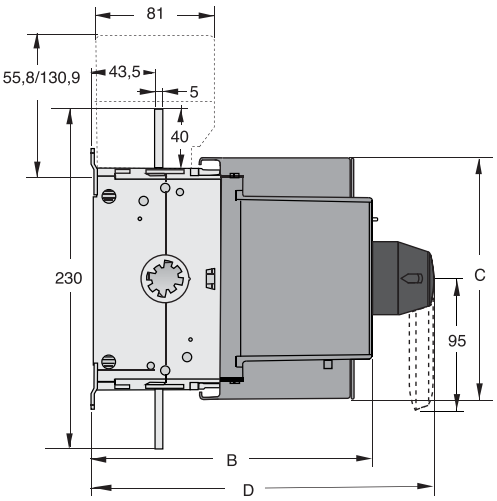


M00081/OS315-400_01_04K B

| | OS315, OS400 | | | | OS400 | | | |
|---|---|---|---|---|---|---|---|---|
| | B01K | B02K | B03K | B04K | D01K | D02K | D03K | D04K |
| A | 127 | 191 | 255 | 319 | 127 | 191 | 255 | 319 |
| B | 176 | 176 | 176 | 176 | 193 | 193 | 193 | 193 |
| C | 194 | 194 | 194 | 194 | 166 | 166 | 166 | 166 |
| D | 219 | 219 | 219 | 219 | 236 | 236 | 236 | 236 |

| | OS315, OS400 | | | | OS400 | | | |
|---|---|---|---|---|---|---|---|---|
| | B01K | B02K | B03K | B04K | D01K | D02K | D03K | D04K |
| A1 | 98,5 | 162,5 | 226,5 | 290,5 | 98,5 | 162,5 | 226,5 | 290,5 |
| B1 | 116,5 | 180,5 | 244,5 | 308,5 | 116,5 | 180,5 | 244,5 | 308,5 |
| C1 | 134,5 | 198,5 | 262,5 | 326,5 | 134,5 | 198,5 | 262,5 | 326,5 |

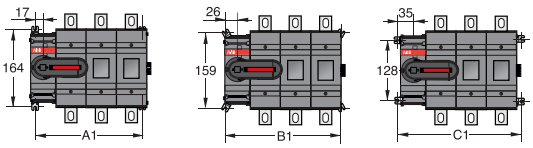

## OS 600/630_K and OS 800_K

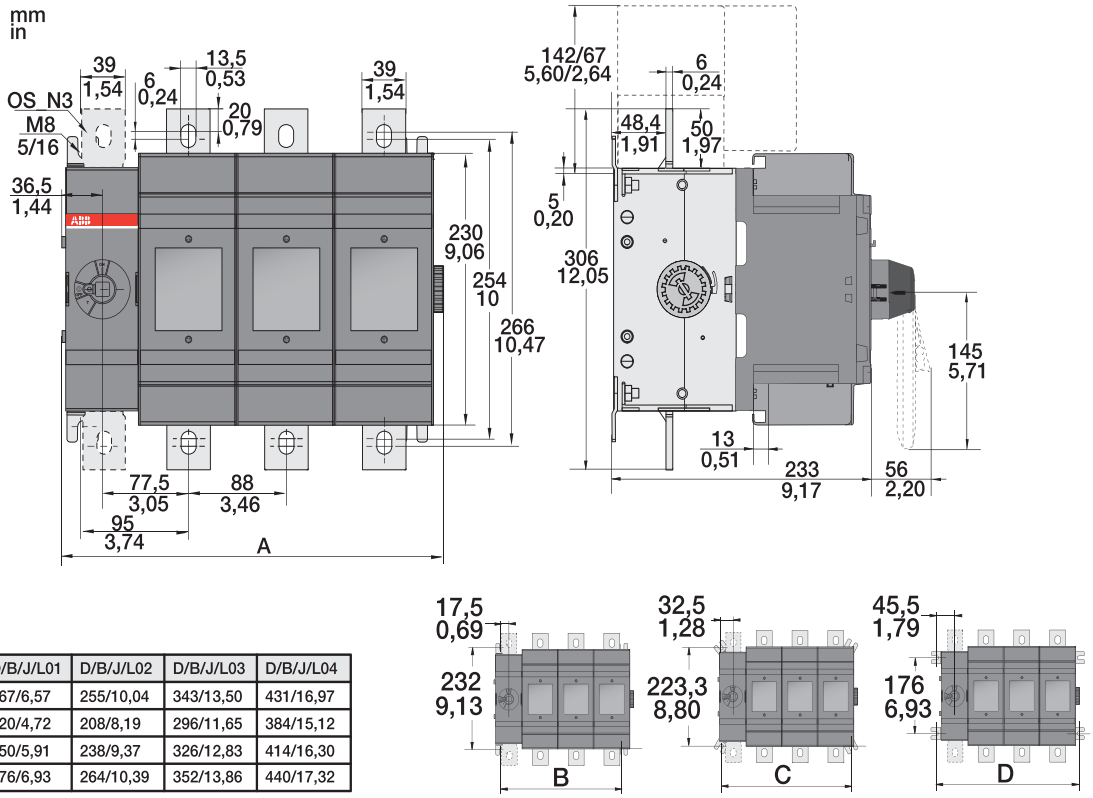


M00229 / OS 600-800_01-04K A

| | D/B/J/L01 | D/B/J/L02 | D/B/J/L03 | D/B/J/L04 |
|---|---|---|---|---|
| A | 167/6,57 | 255/10,04 | 343/13,50 | 431/16,97 |
| B | 120/4,72 | 208/8,19 | 296/11,65 | 384/15,12 |
| C | 150/5,91 | 238/9,37 | 326/12,83 | 414/16,30 |
| D | 176/6,93 | 264/10,39 | 352/13,86 | 440/17,32 |

## OS 1200/1250_K

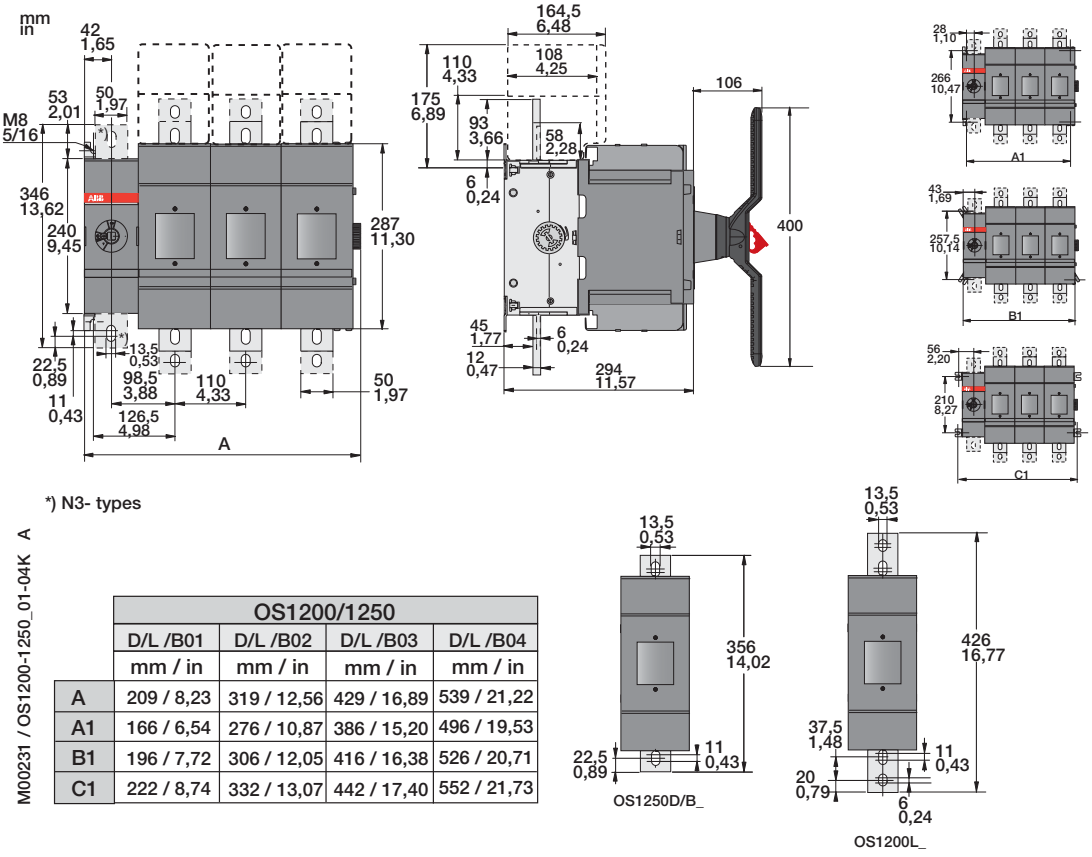


M00231 / OS1200-1250_01-04K A

| | OS1200/1250 | | | |
|---|---|---|---|---|
| | D/L /B01 | D/L /B02 | D/L /B03 | D/L /B04 |
| | mm / in | mm / in | mm / in | mm / in |
| A | 209 / 8,23 | 319 / 12,56 | 429 / 16,89 | 539 / 21,22 |
| A1 | 166 / 6,54 | 276 / 10,87 | 386 / 15,20 | 496 / 19,53 |
| B1 | 196 / 7,72 | 306 / 12,05 | 416 / 16,38 | 526 / 20,71 |
| C1 | 222 / 8,74 | 332 / 13,07 | 442 / 17,40 | 552 / 21,73 |

# Side operated switch fuses
# Dimension drawings

## OS Mini

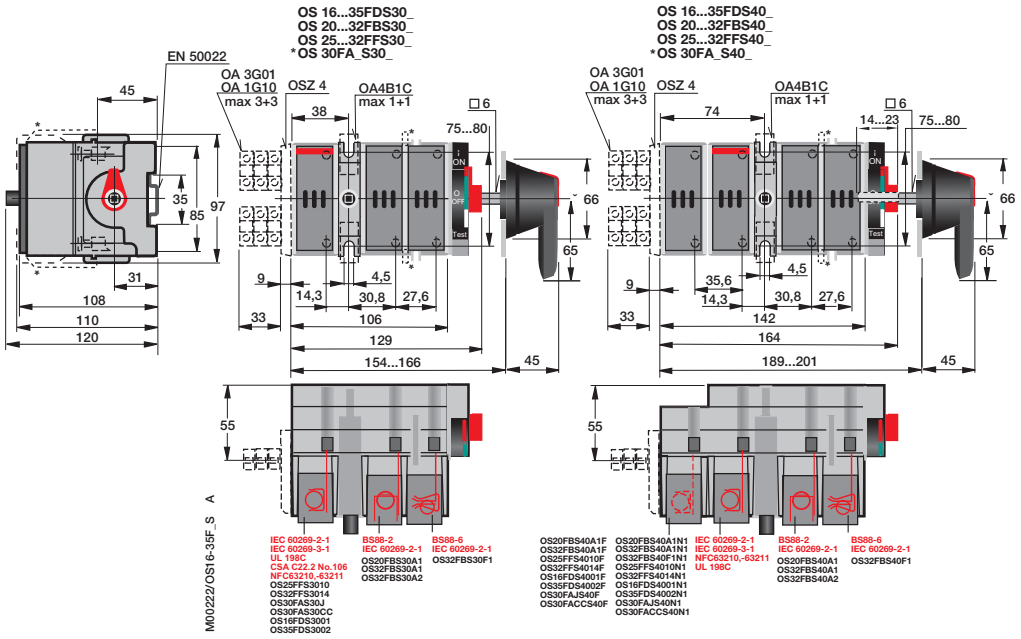


## OS 40 Mini

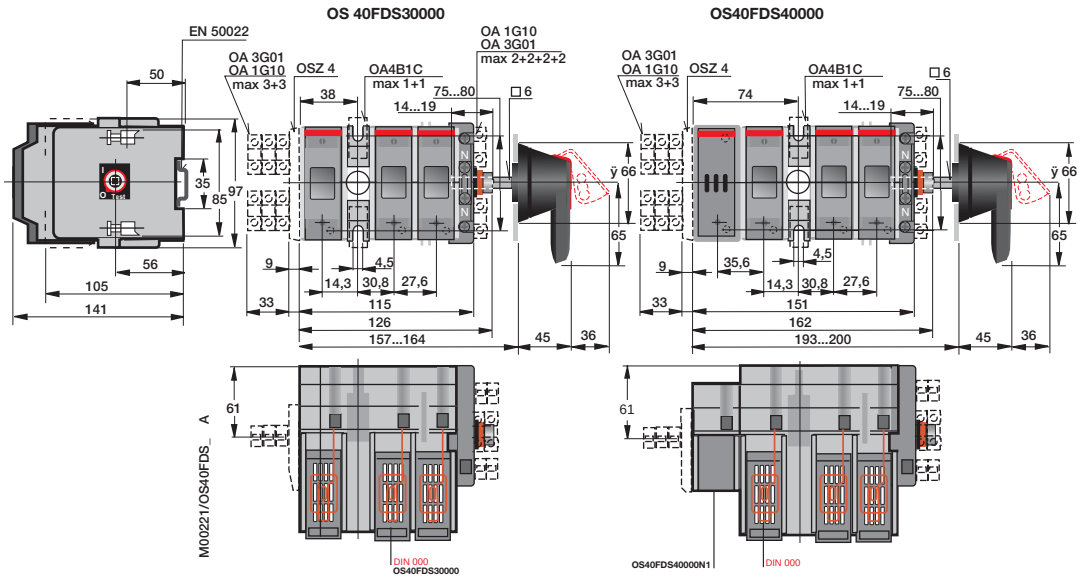

# Side operated switch fuses
# Dimension drawings

## OS32G...63G_S_

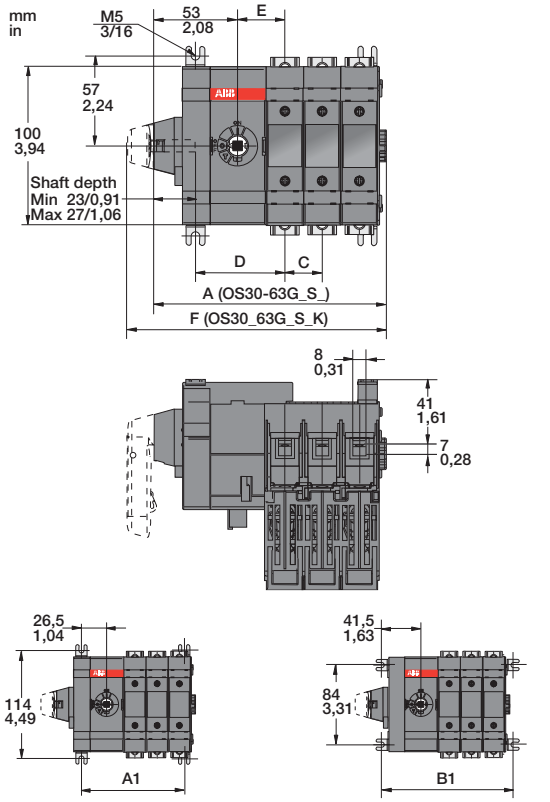


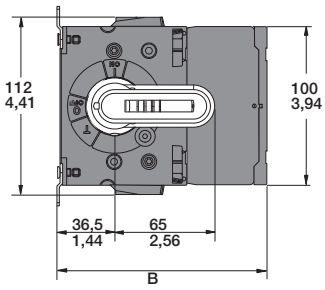


M00296/OS30_63G_01_04S A

| | OS32-63G_ mm | | | | | | | | OS60G_ mm/ in | | | |
|---|---|---|---|---|---|---|---|---|---|---|---|---|
| | DS01 | DS02 | DS03 | DS04 | B/FS01 | B/FS02 | B/FS03 | B/FS04 | JS01 | JS02 | JS03 | JS04 |
| A | 99,5 | 123 | 146,5 | 170 | 99,5 | 123 | 146,5 | 170 | 109,5/4,31 | 144,5/5,69 | 179,5/7,07 | 214,5/8,44 |
| B | 132,5 | 132,5 | 132,5 | 132,5 | 120,5 | 120,5 | 120,5 | 120,5 | 130/5,12 | 130/5,12 | 130/5,12 | 130/5,12 |
| C | - | 23,5 | 23,5 | 23,5 | - | 23,5 | 23,5 | 23,5 | - | 35/1,38 | 35/1,38 | 35/1,38 |
| D | 56,5 | 56,5 | 56,5 | 56,5 | 56,5 | 56,5 | 56,5 | 56,5 | 62/2,44 | 62/2,44 | 62/2,44 | 62/2,44 |
| E | 30 | 30 | 30 | 30 | 30 | 30 | 30 | 30 | 36/1,41 | 36/1,41 | 36/1,41 | 36/1,41 |
| F | 116,5 | 140 | 163,5 | 187 | 116,5 | 140 | 163,5 | 187 | 126,5/4,98 | 161,5/6,36 | 196,5/7,74 | 231,5/9,11 |
| A1 | 61,5 | 85 | 108,5 | 132 | 61,5 | 85 | 108,5 | 132 | 67,5/2,66 | 102,5/4,04 | 137,5/5,41 | 172,5/6,79 |
| B1 | 91,5 | 115 | 138,5 | 162,5 | 91,5 | 115 | 138,5 | 162,5 | 37,5/1,48 | 72,5/2,85 | 107,5/4,23 | 142,5/5,61 |

## OS100G...160G_S_

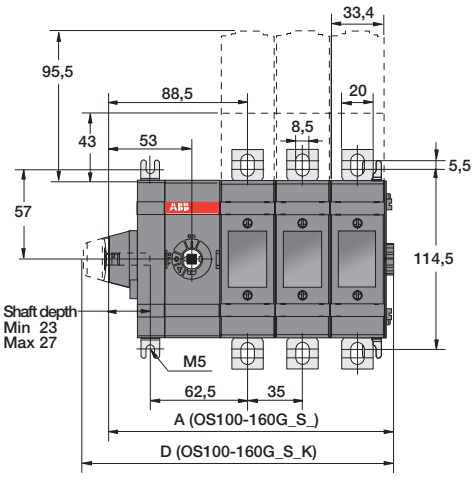


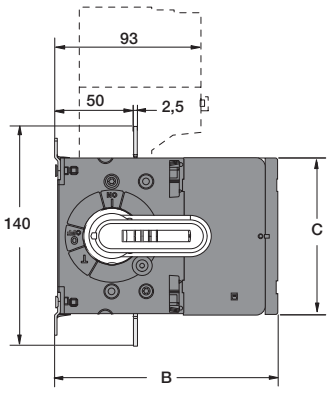


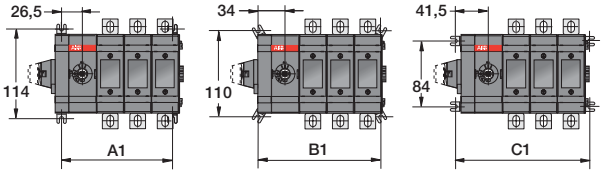


M00298/OS100_160G_S01_04 A

| | OS100-160G mm | | | | | | | |
|---|---|---|---|---|---|---|---|---|
| | D/F01 | D/F02 | D/F03 | D/F04 | B01 | B02 | B03 | B04 |
| A | 111,5 | 146,5 | 181,5 | 216,5 | 111,5 | 146,5 | 181,5 | 216,5 |
| B | 142 | 142 | 142 | 142 | 126,5 | 126,5 | 126,5 | 126,5 |
| C | 100 | 100 | 100 | 100 | 118 | 118 | 118 | 118 |
| D | 128,5 | 163,5 | 198,5 | 233,5 | 128,5 | 163,5 | 198,5 | 233,5 |
| A1 | 71,5 | 106,5 | 141,5 | 176,5 | 71,5 | 106,5 | 141,5 | 176,5 |
| B1 | 86,5 | 121,5 | 156,5 | 191,5 | 86,5 | 121,5 | 156,5 | 191,5 |
| C1 | 101,5 | 136,5 | 171,5 | 206,5 | 101,5 | 136,5 | 171,5 | 206,5 |

# Side operated switch fuses with direct mounted handles
# Dimension drawings

## OS100GJS

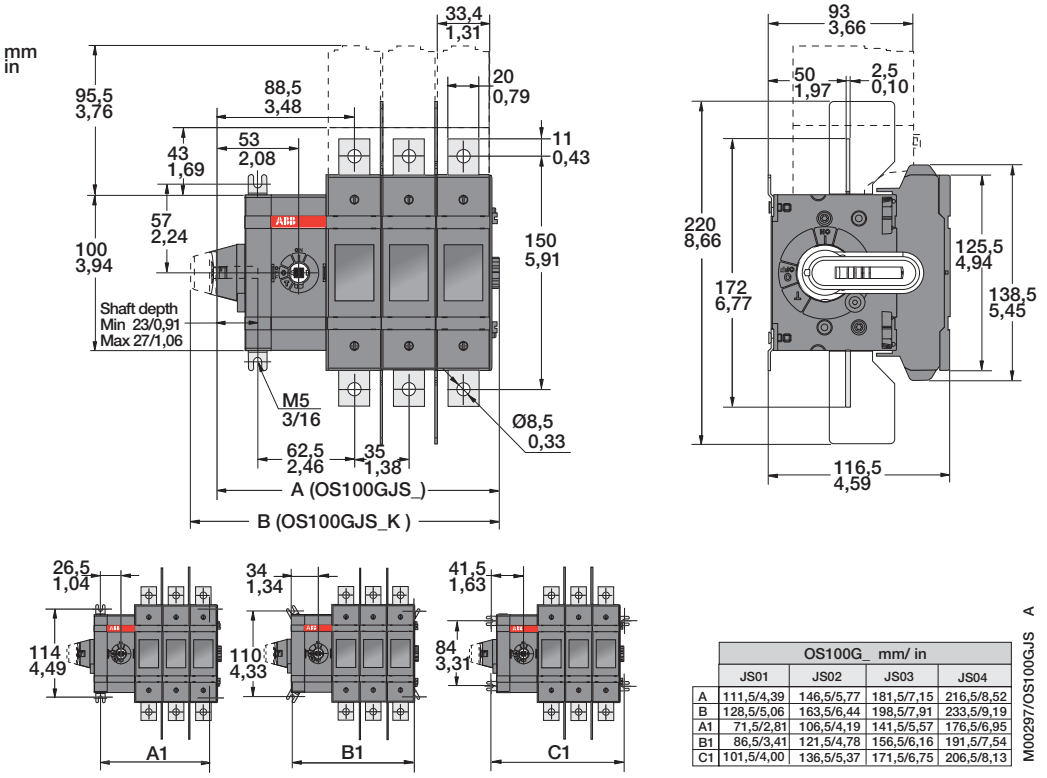


| OS100G_ mm/ in | | | | |
|---|---|---|---|---|
| | JS01 | JS02 | JS03 | JS04 |
| A | 111,5/4,39 | 146,5/5,77 | 181,5/7,15 | 216,5/8,52 |
| B | 128,5/5,06 | 163,5/6,44 | 198,5/7,91 | 233,5/9,19 |
| A1 | 71,5/2,81 | 106,5/4,19 | 141,5/5,57 | 176,5/6,95 |
| B1 | 86,5/3,41 | 121,5/4,78 | 156,5/6,16 | 191,5/7,54 |
| C1 | 101,5/4,00 | 136,5/5,37 | 171,5/6,75 | 206,5/8,13 |

M00297/OS100GJS A

## OS 200...400 _K

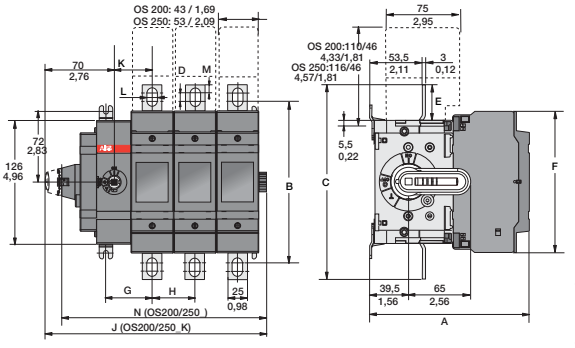


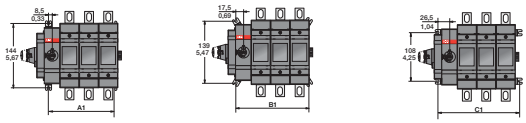


| | OS200 _, OS200_K | | | | | | | | | | | | | | OS250 _, OS250_K | | | | | | | |
|---|---|---|---|---|---|---|---|---|---|---|---|---|---|---|---|---|---|---|---|---|---|---|
| | DS01 | | BS01 | | DS02 | | BS02 | | DS03 | | BS03 | | DS04 | | BS04 | | DS01 | | DS02 | | DS03 | | DS04 | |
| A | 149,0 | 5,87 | 130,0 | 5,12 | 149,0 | 5,87 | 130,0 | 5,12 | 149,0 | 5,87 | 130,0 | 5,12 | 149,0 | 5,87 | 149,0 | 5,87 | 154,0 | 6,06 | 154,0 | 6,06 | 154,0 | 6,06 | 154,0 | 6,06 |
| B | 164,5 | 6,48 | 164,5 | 6,48 | 164,5 | 6,48 | 164,5 | 6,48 | 164,5 | 6,48 | 164,5 | 6,48 | 164,5 | 6,48 | 164,5 | 6,48 | 162,0 | 6,38 | 162,0 | 6,38 | 162,0 | 6,38 | 162,0 | 6,38 |
| C | 198,5 | 7,81 | 198,5 | 7,81 | 198,5 | 7,81 | 198,5 | 7,81 | 198,5 | 7,81 | 198,5 | 7,81 | 198,5 | 7,81 | 198,5 | 7,81 | 193,0 | 7,60 | 193,0 | 7,60 | 193,0 | 7,60 | 193,0 | 7,60 |
| D | 8,5 | 0,33 | 8,5 | 0,33 | 8,5 | 0,33 | 8,5 | 0,33 | 8,5 | 0,33 | 8,5 | 0,33 | 8,5 | 0,33 | 8,5 | 0,33 | 4,0 | 0,16 | 4,0 | 0,16 | 4,0 | 0,16 | 4,0 | 0,16 |
| E | 36,5 | 1,44 | 36,5 | 1,44 | 36,5 | 1,44 | 36,5 | 1,44 | 36,5 | 1,44 | 36,5 | 1,44 | 36,5 | 1,44 | 36,5 | 1,44 | 33,5 | 1,32 | 33,5 | 1,32 | 33,5 | 1,32 | 33,5 | 1,32 |
| F | 144,5 | 5,69 | 144,5 | 5,69 | 144,5 | 5,69 | 144,5 | 5,69 | 144,5 | 5,69 | 144,5 | 5,69 | 144,5 | 5,69 | 144,5 | 5,69 | 148,5 | 5,85 | 148,5 | 5,85 | 148,5 | 5,85 | 148,5 | 5,85 |
| G | 48,5 | 1,91 | 48,5 | 1,91 | 48,5 | 1,91 | 48,5 | 1,91 | 48,5 | 1,91 | 48,5 | 1,91 | 48,5 | 1,91 | 48,5 | 1,91 | 53,5 | 2,11 | 53,5 | 2,11 | 53,5 | 2,11 | 53,5 | 2,11 |
| H | - | - | - | - | - | - | 43,5 | 1,71 | 43,5 | 1,71 | 43,5 | 1,71 | 43,5 | 1,71 | 43,5 | 1,71 | - | - | 54,0 | 2,13 | 54,0 | 2,13 | 54,0 | 2,13 |
| I | 20,0 | 0,79 | 20,0 | 0,79 | 20,0 | 0,79 | 20,0 | 0,79 | 20,0 | 0,79 | 20,0 | 0,79 | 20,0 | 0,79 | 20,0 | 0,79 | 25,0 | 0,98 | 25,0 | 0,98 | 25,0 | 0,98 | 25,0 | 0,98 |
| J | 138,5 | 5,45 | 138,5 | 5,45 | 182,0 | 7,17 | 182,0 | 7,17 | 225,5 | 8,88 | 225,5 | 8,88 | 269,0 | 10,59 | 269,0 | 10,59 | 148,5 | 5,85 | 202,5 | 7,97 | 256,5 | 10,10 | 310,5 | 12,22 |
| K | 40,0 | 1,57 | 40,0 | 1,57 | 40,0 | 1,57 | 40,0 | 1,57 | 40,0 | 1,57 | 40,0 | 1,57 | 40,0 | 1,57 | 40,0 | 1,57 | 45,0 | 1,77 | 45,0 | 1,77 | 45,0 | 1,77 | 45,0 | 1,77 |
| L | 10,0 | 0,39 | 10,0 | 0,39 | 10,0 | 0,39 | 10,0 | 0,39 | 10,0 | 0,39 | 10,0 | 0,39 | 10,0 | 0,39 | 10,0 | 0,39 | 11,0 | 0,43 | 11,0 | 0,43 | 11,0 | 0,43 | 11,0 | 0,43 |
| M | 8,5 | 0,33 | 8,5 | 0,33 | 8,5 | 0,33 | 8,5 | 0,33 | 8,4 | 0,33 | 8,5 | 0,33 | 8,5 | 0,33 | 8,5 | 0,33 | 11,5 | 0,45 | 11,5 | 0,45 | 11,5 | 0,45 | 11,5 | 0,45 |
| N | 121,5 | 4,78 | 121,5 | 4,78 | 165,0 | 6,50 | 165,0 | 6,50 | 208,5 | 8,21 | 208,5 | 8,21 | 252,0 | 9,92 | 252,0 | 9,92 | 131,5 | 5,18 | 186,0 | 7,32 | 240,0 | 9,45 | 294,0 | 11,57 |
| A1 | 60,5 | 2,38 | 60,5 | 2,38 | 104,0 | 4,09 | 104,0 | 4,09 | 147,5 | 5,81 | 147,5 | 5,81 | 191,0 | 7,52 | 191,0 | 7,52 | 70,5 | 2,78 | 124,5 | 4,90 | 178,5 | 7,03 | 232,5 | 9,15 |
| B1 | 79,5 | 3,13 | 79,5 | 3,13 | 123,0 | 4,84 | 123,0 | 4,84 | 166,5 | 6,56 | 166,5 | 6,56 | 210,0 | 8,27 | 210,0 | 8,27 | 89,5 | 3,52 | 143,5 | 5,65 | 197,5 | 7,78 | 251,5 | 9,90 |
| C1 | 96,5 | 3,80 | 96,5 | 3,80 | 140,0 | 5,51 | 140,0 | 5,51 | 183,5 | 7,22 | 183,5 | 7,22 | 227,0 | 8,94 | 227,0 | 8,94 | 106,5 | 4,19 | 214,5 | 8,44 | 268,5 | 10,57 | 322,5 | 12,70 |

M00153/OS200-250_S01-04_ A

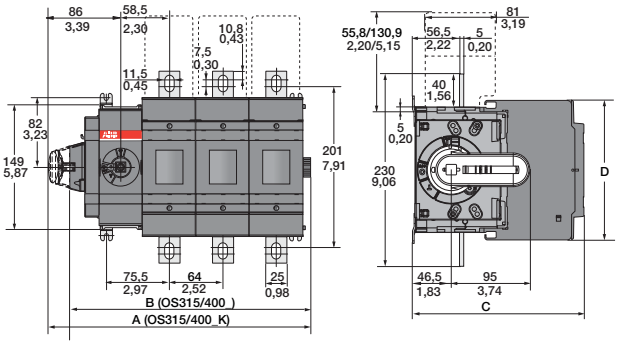


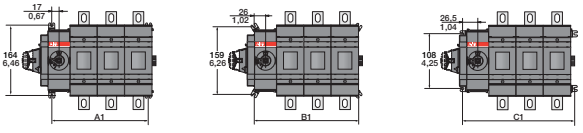


| | OS315, OS315 K, OS400, OS400 K | | | | | | | | OS400 _, OS400 K | | | | | | | |
|---|---|---|---|---|---|---|---|---|---|---|---|---|---|---|---|---|
| | BS01/JS01 | | BS02/JS02 | | BS03/JS03 | | BS04/JS04 | | DS01 | | DS02 | | DS03 | | DS04 | |
| | mm | in | mm | in | mm | in | mm | in | mm | in | mm | in | mm | in | mm | in |
| A | 185,0 | 7,28 | 249,0 | 9,80 | 313,0 | 12,32 | 377,0 | 14,84 | 185,0 | 7,28 | 249,0 | 9,80 | 313,0 | 12,32 | 377,0 | 14,84 |
| B | 160,0 | 6,30 | 224,0 | 8,82 | 288,0 | 11,34 | 352,0 | 13,86 | 160,0 | 6,30 | 224,0 | 8,82 | 288,0 | 11,34 | 352,0 | 13,86 |
| C | 176,0 | 6,93 | 176,0 | 6,93 | 176,0 | 6,93 | 176,0 | 6,93 | 193,0 | 7,60 | 193,0 | 7,60 | 193,0 | 7,60 | 193,0 | 7,60 |
| D | 194,0 | 7,64 | 194,0 | 7,64 | 194,0 | 7,64 | 194,0 | 7,64 | 166,0 | 6,54 | 166,0 | 6,54 | 166,0 | 6,54 | 166,0 | 6,54 |
| A1 | 98,5 | 3,88 | 162,5 | 6,40 | 226,5 | 8,92 | 290,5 | 11,44 | 98,5 | 3,88 | 162,5 | 6,40 | 226,5 | 8,92 | 290,5 | 11,44 |
| B1 | 116,5 | 4,59 | 180,5 | 7,11 | 244,5 | 9,63 | 308,5 | 12,15 | 116,5 | 4,59 | 180,5 | 7,11 | 244,5 | 9,63 | 308,5 | 12,15 |
| C1 | 134,5 | 5,30 | 198,5 | 7,81 | 262,5 | 10,33 | 326,5 | 12,85 | 134,5 | 5,30 | 198,5 | 7,81 | 262,5 | 10,33 | 326,5 | 12,85 |

M00154/OS315-400_S01-04_ A

## OS 630_K and OS 800_K

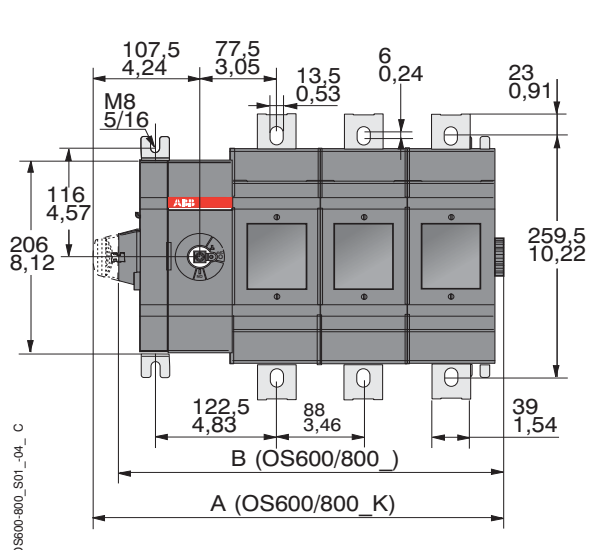


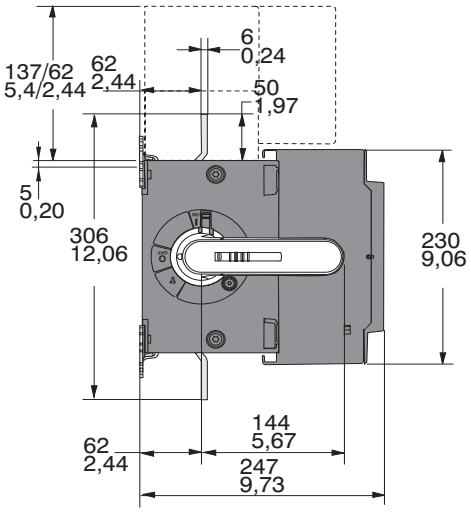


| | OS600/630/800_ , OS600/630/800_K | | | |
|---|---|---|---|---|
| | DS/BS/JS/LS01 | DS/BS/JS/LS02 | DS/BS/JS/LS03 | DS/BS/JS/LS04 |
| | mm / in | mm / in | mm / in | mm / in |
| A | 238/9,38 | 326/12,84 | 414/16,31 | 502/19,78 |
| B | 213/8,39 | 301/11,86 | 389/15,32 | 477/18,79 |
| A1 | 147,5/5,81 | 235,5/9,28 | 323,5/12,75 | 411,5/16,21 |
| B1 | 177,5/6,99 | 265,5/10,46 | 353,5/13,93 | 441,5/17,39 |
| C1 | 203,5/8,02 | 291,5/11,48 | 379,5/14,95 | 467,5/18,42 |

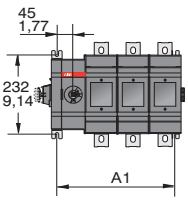


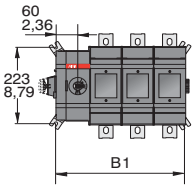


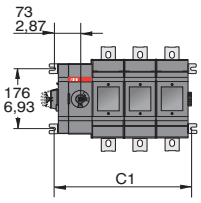

## Plastic handles

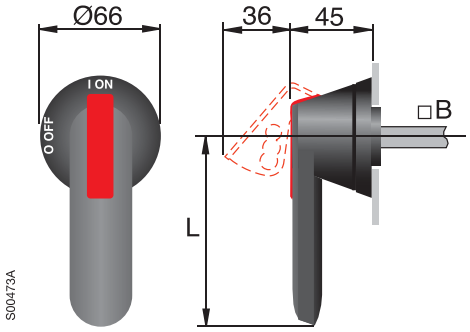


| Type | L handle length | B shaft diameter |
|---|---|---|
| OH_45J6 | 45 | 6 |
| OH_65J6 | 65 | 6 |
| OH_95J12 | 95 | 12 |
| OH_125J12 | 125 | 12 |
| OH_145J12 | 145 | 12 |
| OH_175J12 | 175 | 12 |
| OH_275J12 | 275 | 12 |

Door drilling for OH_ handles:

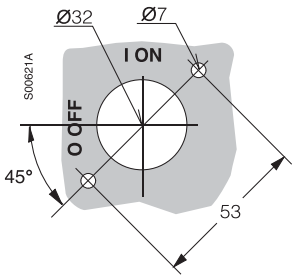


| Handle type | L |
|---|---|
| OHB150J12P | 300 |
| OHB200J12P | 400 |

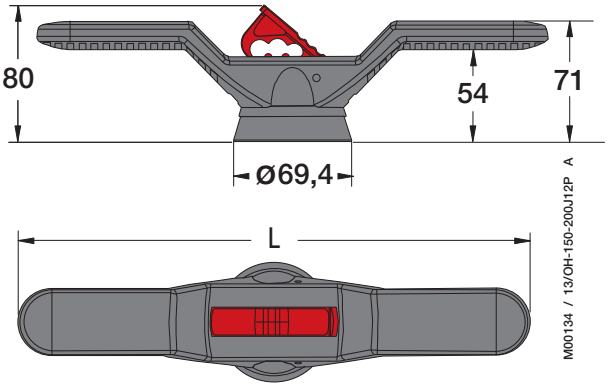


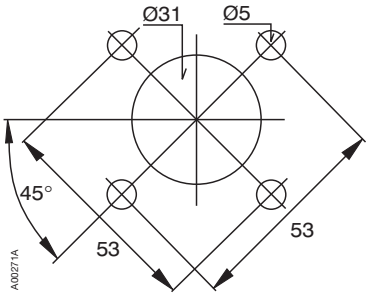


## Metallic handles

YASDA 7, 8, 21 (A=220)
YASDA 6, 35 (A=320)

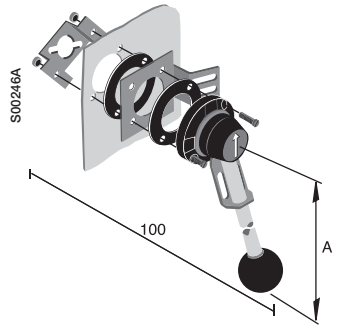


Door drilling for YASDA:

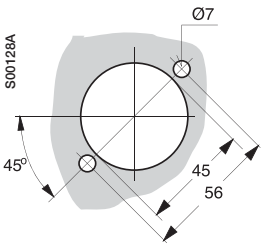


## Stainless steel handles

OHM_

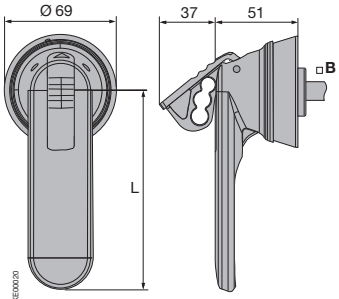


| Handle type | OHM65L6 | OHM125L12 | OHM175L12 | OHM275L12 |
|---|---|---|---|---|
| L | 65 | 125 | 175 | 275 |
| □B | 6 | 12 | 12 | 12 |

Door drilling for OHM_

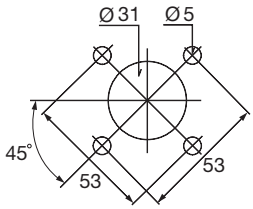


## Minimum distance L between the hinge and the rotating shaft

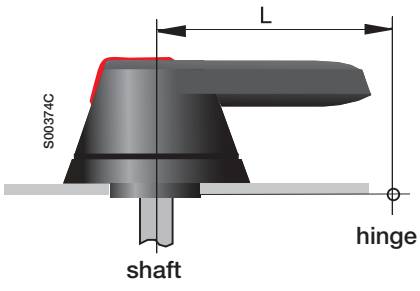


| Sizes [A] | L [mm] | Suitable handles |
|---|---|---|
| 30...250 | 60 | OH_65J_ |
| 315...400 | 95 | OH_95J_ |
| 630...800 | 150 | OH_125J_, OH_145J_ |
| 630...800 | 175<br>275 | OH_175J_<br>OH_275J_ |
| 630...800 | 220 | YASDA7, 8 |

## 6 and 8-pole switch fuses

OESAZW 2

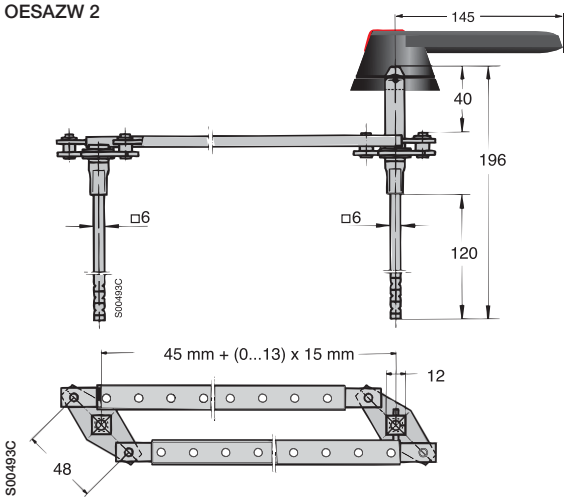


OETLZW 9

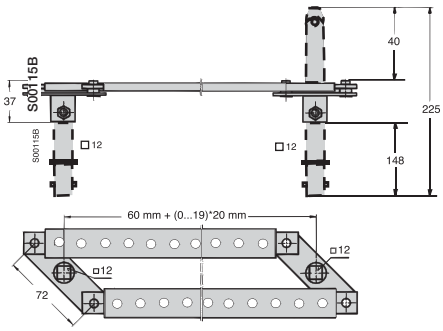


## Change-over and by-pass switch fuses

OETLZW11

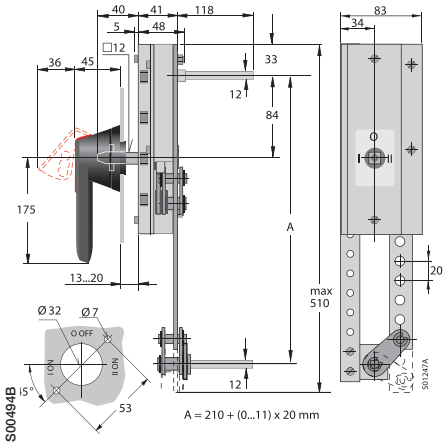


OETLZW12, 13

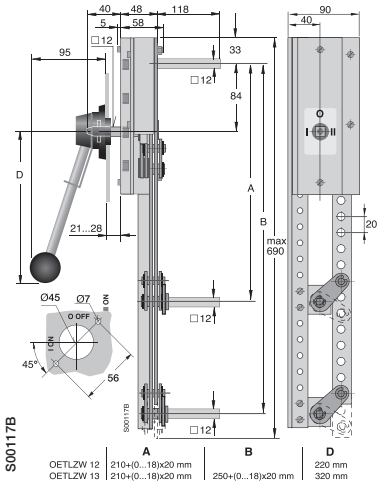


## Mechanical interlock

OETLZW 3, 14, 15

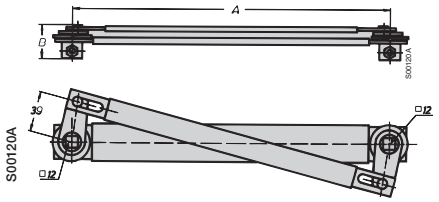


OETLZW 3: A= 300, B= 31
OETLZW 14: A= 250, B= 31
OETLZW 15: A0=500, B= 36

OTZW 25

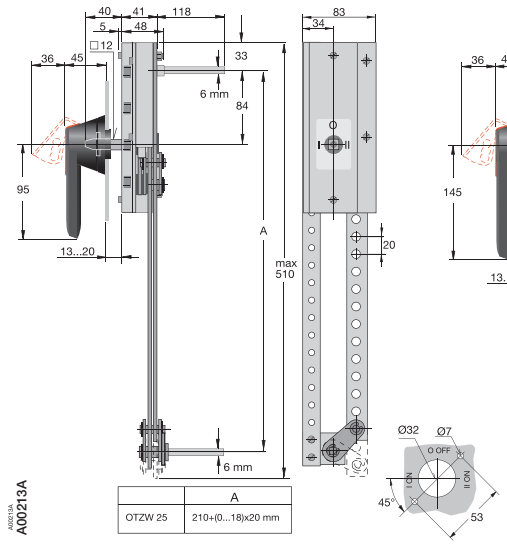


| | A |
|---|---|
| OTZW 25 | 210+(0...18)x20 mm |

OTZW 26

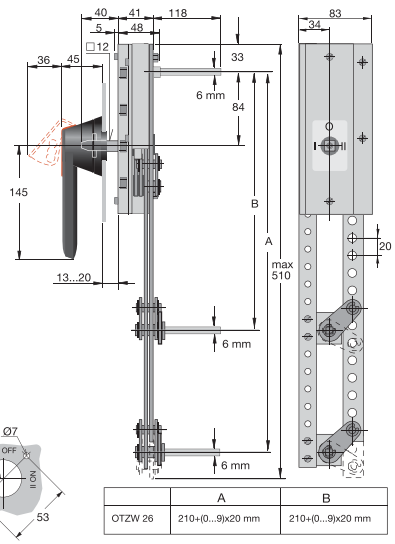


| | A | B |
|---|---|---|
| OTZW 26 | 210+(0...9)x20 mm | 210+(0...9)x20 mm |

OTZW 10, OTZW 24

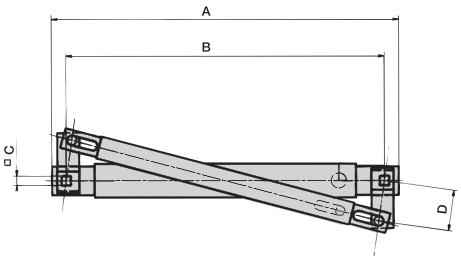


| Type | A | B | C | D |
|---|---|---|---|---|
| OTZW10 | 206 | 190 | 6 | 30 |
| OTZW24 | 114 | 100 | 5 | 25 |

## Handle indications and functions

- The handle indicates the position of the contacts with complete reliability in all situations.
  If the contacts are welded together, the handle doesn´t reach the OFF-position but remains between ON and OFF, maintaining the door interlock and padlocking is not possible to do.
- When operating the switch fuse to the Test-position with a test handle the test auxiliary contacts change position.
  The main contacts remain open.

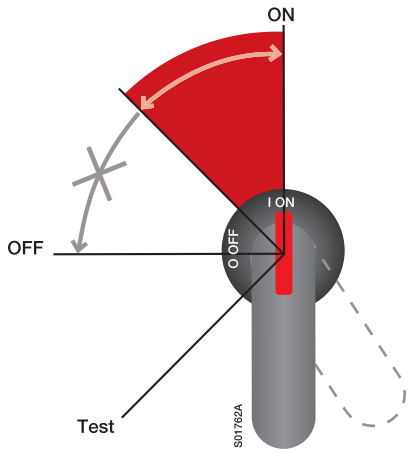


## ON and OFF-functions of main and auxiliary contacts

Places of auxiliary contacts and Test ind.

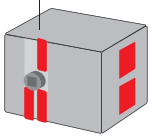

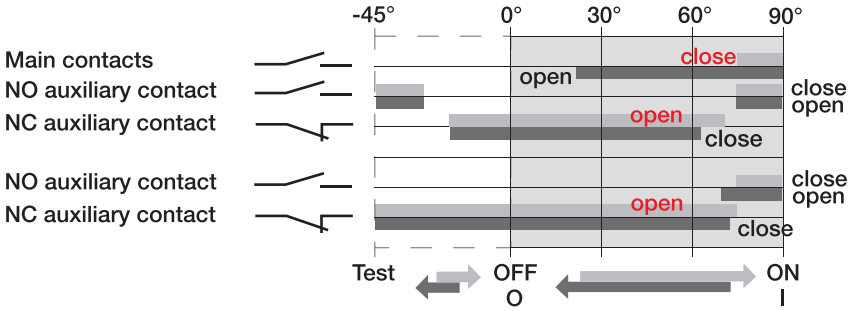


## ON and OFF-functions of main and auxiliary contacts

### OS mini

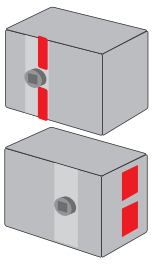

OA4B1C
OA4B1C
OA1G10
OA3G01

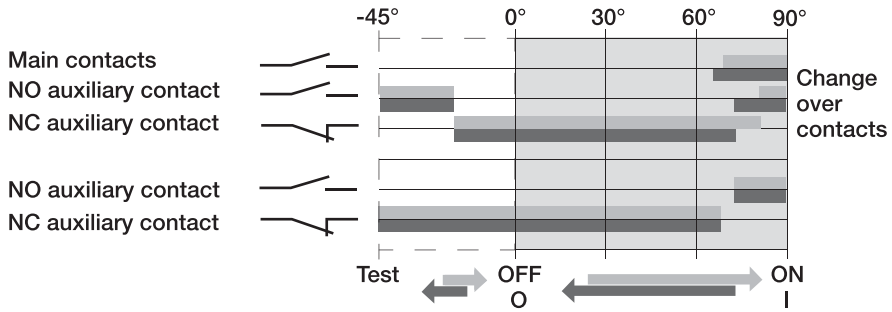


### OS Mini

MCB-10
+ OESAZX 169 1 NO
MCB-01
+ OESAZX 169 1 NC

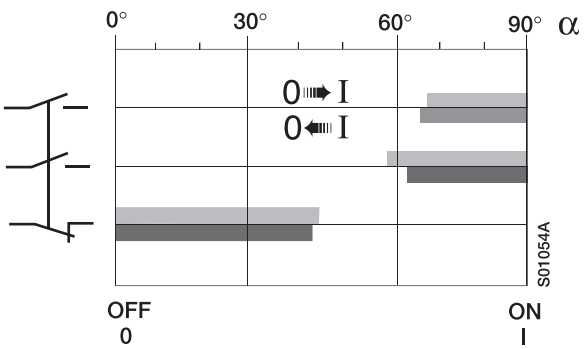

## ON and OFF-functions of main and auxiliary contacts OS32G...1250

| Auxiliary contact | Contact configuration |
|---|---|
| OA1G10 | 1NO |
| OA3G01 | 1NC |

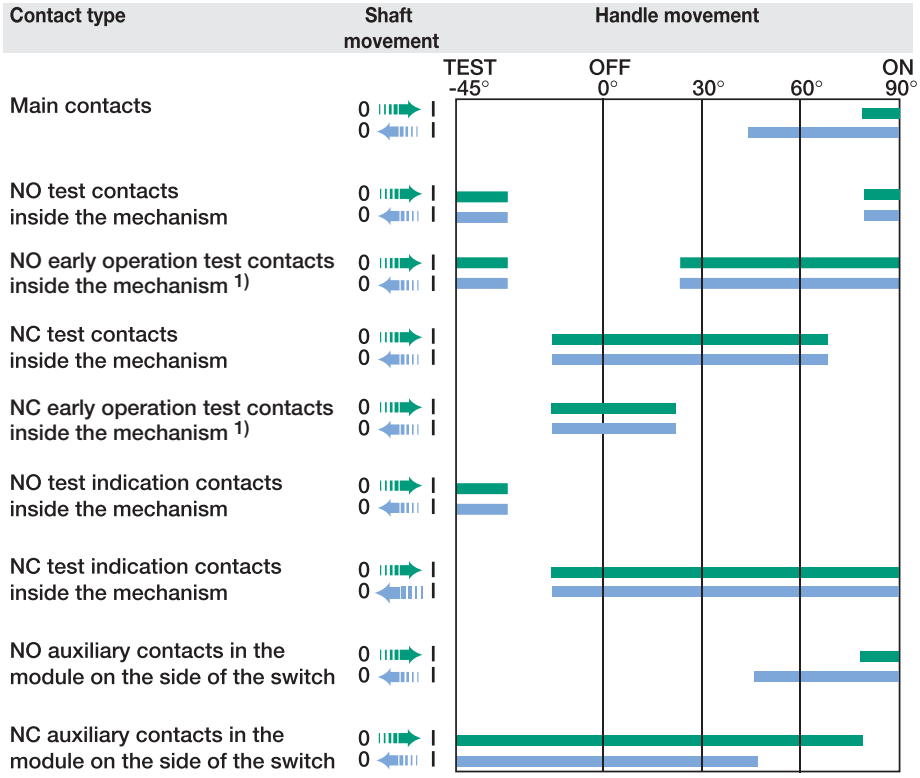


1) OS1200...1250 only

# Index


| Type | Order number | Page | Description |
|---|---|---|---|
| MCB-01 | 1SCA022150R5370 | 34 | Auxiliary contact |
| MCB-10 | 1SCA022150R5110 | 34 | Auxiliary contact |
| OA1G10 | 1SCA022353R4970 | 34 | Auxiliary contact |
| OA1G10 | 1SCA022353R4970 | 35 | Auxiliary contact |
| OA1G10AU | 1SCA022436R7910 | 34 | Auxiliary contact |
| OA1G10AU | 1SCA022436R7910 | 35 | Auxiliary contact |
| OA3G01 | 1SCA022456R7410 | 34 | Auxiliary contact |
| OA3G01 | 1SCA022456R7410 | 35 | Auxiliary contact |
| OA3G01AU | 1SCA022819R5260 | 34 | Auxiliary contact |
| OA3G01AU | 1SCA022819R5260 | 35 | Auxiliary contact |
| OA4B01 | 1SCA022276R9210 | 34 | Auxiliary contact |
| OA4B10 | 1SCA022276R9050 | 34 | Auxiliary contact |
| OA4B1C | 1SCA022193R0150 | 34 | Auxiliary contact |
| OEA28 | 1SCA022714R8810 | 35 | Auxiliary contact |
| OESAZG5 | 1SCA022057R1380 | 37 | Solid link |
| OESAZG98 | 1SCA022354R9650 | 37 | Solid link |
| OESAZK98 | 1SCA022067R7370 | 37 | Solid link |
| OESAZL79 | 1SCA022067R7110 | 37 | Solid link |
| OESAZS175 | 1SCA022354R9570 | 37 | Solid link |
| OESAZS36 | 1SCA022044R4600 | 37 | Solid link |
| OESAZW2 | 1SCA022078R1600 | 41 | Conversion kit |
| OESAZX160 | 1SCA022186R3960 | 36 | Neutral link |
| OESAZX162 | 1SCA022193R0400 | 36 | Neutral link |
| OESAZX164 | 1SCA022202R9520 | 36 | Neutral link |
| OESAZX165 | 1SCA022202R9790 | 36 | Neutral link |
| OESAZX169 | 1SCA022196R9360 | 34 | Mounting frame for auxiliary contacts |
| OESAZX171 | 1SCA022197R2580 | 36 | Neutral link |
| OETLZK19 | 1SCA022093R1850 | 33 | Adapter for extension socket |
| OETLZW11 | 1SCA022078R0030 | 41 | Conversion kit |
| OETLZW12 | 1SCA022078R0200 | 41 | Conversion kit |
| OETLZW13 | 1SCA022078R0460 | 41 | Conversion kit |
| OETLZW14 | 1SCA022077R3410 | 41 | Conversion kit |
| OETLZW15 | 1SCA022081R9340 | 41 | Conversion kit |
| OETLZW16 | 1SCA022095R2070 | 44 | Cam attachment |
| OETLZW3 | 1SCA022049R0380 | 41 | Conversion kit |
| OETLZW5 | 1SCA022052R3900 | 44 | Cam attachment |
| OETLZW9 | 1SCA022061R3300 | 41 | Conversion kit |
| OETLZX95 | 1SCA022083R5620 | 33 | Shaft extension socket |
| OEZNL1 | 1SCA022723R7400 | 37 | Solid link |
| OEZNL10 | 1SCA116437R1001 | 37 | Solid link |
| OEZNL8 | 1SCA113998R1001 | 37 | Solid link |
| OFAE 504 | 1SCA022007R6880 | 31 | Fuse replacement handle |
| OFAE 505 | 2CMA125276R1000 | 31 | Fuse replacement handle |
| OFAW00 | 1SCA022003R9680 | 37 | Solid link |
| OFAW1 | 1SCA022003R9760 | 37 | Solid link |
| OFAW2 | 1SCA022003R9840 | 37 | Solid link |
| OFAW3 | 1SCA022003R9920 | 37 | Solid link |
| OFM260 | 1SCA022459R8560 | 43 | Electronic fuse monitor |
| OFM690 | 1SCA022459R8480 | 43 | Electronic fuse monitor |
| OFMZX2 | 1SCA022475R9910 | 43 | Mounting accessory for fuse monitor |
| OFS260 | 1SCA022716R0180 | 43 | Electronic fuse monitor |
| OFS690 | 1SCA022715R9920 | 43 | Electronic fuse monitor |
| OHB125J12 | 1SCA022381R1560 | 30 | Handle |
| OHB125J12T | 1SCA022652R2220 | 30 | Handle |
| OHB145J12 | 1SCA022381R2110 | 30 | Handle |
| OHB145J12E00S | 1SCA022679R9700 | 31 | Handle |
| OHB145J12T | 1SCA022652R2570 | 30 | Handle |
| OHB150J12P | 1SCA022865R9430 | 30 | Handle |
| OHB175J12 | 1SCA022381R2450 | 30 | Handle |
| OHB175J12T | 1SCA022708R0740 | 30 | Handle |
| OHB200J12P | 1SCA022865R9510 | 30 | Handle |
| OHB200J12PT | 1SCA106510R1001 | 30 | Handle |
| OHB4 | 1SCA022439R4050 | 31 | Direct mounted handle |
| OHB45J6 | 1SCA022380R8770 | 30 | Handle |
| OHB45J6T | 1SCA109870R1001 | 30 | Handle |
| OHB65J6 | 1SCA022380R9660 | 30 | Handle |
| OHB65J6E00S | 1SCA022382R9850 | 31 | Handle |
| OHB65J6T | 1SCA022399R8110 | 30 | Handle |
| OHB65J6TE00S | 1SCA109016R1001 | 31 | Handle |
| OHB95J12 | 1SCA022381R0830 | 30 | Handle |
| OHB95J12T | 1SCA022736R1750 | 30 | Handle |
| OHBS5 | 1SCA109015R1001 | 31 | Direct mounted handle |
| OHG125J12 | 1SCA022381R1640 | 30 | Handle |
| OHG145J12 | 1SCA022381R2290 | 30 | Handle |
| OHG175J12 | 1SCA022381R2610 | 30 | Handle |
| OHG45J6 | 1SCA022380R8850 | 30 | Handle |
| OHG65J6 | 1SCA022380R9740 | 30 | Handle |
| OHG65J6E00S | 1SCA022383R4510 | 31 | Handle |
| OHG65J6T | 1SCA022456R9620 | 30 | Handle |
| OHG65J6TE00S | 1SCA109014R1001 | 31 | Handle |
| OHG95J12 | 1SCA022381R0910 | 30 | Handle |
| OHM125L12 | 1SCA022739R1150 | 30 | Handle |
| OHM175L12 | 1SCA022739R1230 | 30 | Handle |
| OHM275L12 | 1SCA022832R4840 | 30 | Handle |
| OHM65L6 | 1SCA022739R1070 | 30 | Handle |
| OHY125J12 | 1SCA022381R1720 | 30 | Handle |
| OHY125J12T | 1SCA022652R2310 | 30 | Handle |
| OHY145J12 | 1SCA022381R2370 | 30 | Handle |
| OHY145J12T | 1SCA022652R2650 | 30 | Handle |
| OHY150J12P | 1SCA101586R1001 | 30 | Handle |
| OHY175J12 | 1SCA022381R2700 | 30 | Handle |
| OHY200J12P | 1SCA101587R1001 | 30 | Handle |
| OHY200J12PT | 1SCA111512R1001 | 30 | Handle |
| OHY45J6 | 1SCA022380R8930 | 30 | Handle |
| OHY65J6 | 1SCA022380R9820 | 30 | Handle |
| OHY65J6E00S | 1SCA022382R9930 | 31 | Handle |
| OHY65J6T | 1SCA022456R9540 | 30 | Handle |
| OHY65J6TE00S | 1SCA022688R0140 | 31 | Handle |
| OHY95J12 | 1SCA022381R1050 | 30 | Handle |
| OHY95J12T | 1SCA022736R1910 | 30 | Handle |
| OHZX14 | 1SCA022851R6590 | 31 | Extension ring for pistol type handles |
| OS100GB03K | 1SCA116747R1001 | 17 | Front operated switch fuse |
| OS100GB03P | 1SCA114613R1001 | 15 | Front operated switch fuse |
| OS100GB04N1K | 1SCA116748R1001 | 17 | Front operated switch fuse |
| OS100GB04N1P | 1SCA114614R1001 | 15 | Front operated switch fuse |
| OS100GB12P | 1SCA114586R1001 | 15 | Front operated switch fuse |
| OS100GB22N1P | 1SCA114602R1001 | 15 | Front operated switch fuse |
| OS100GBS30 | 1SCA116758R1001 | 23 | Side operated switch fuse |
| OS100GBS40N1 | 1SCA116759R1001 | 23 | Side operated switch fuse |
| OS100GBS40N2 | 1SCA116760R1001 | 23 | Side operated switch fuse |
| OS100GJ03P | 1SCA114639R1001 | 19 | Front operated switch fuse |
| OS100GJ04FP | 1SCA115439R1001 | 19 | Front operated switch fuse |
| OS100GJ04N1P | 1SCA115909R1001 | 19 | Front operated switch fuse |
| OS100GJ12P | 1SCA115666R1001 | 19 | Front operated switch fuse |
| OS100GJ22FP | 1SCA114636R1001 | 19 | Front operated switch fuse |
| OS100GJ22N1P | 1SCA115910R1001 | 19 | Front operated switch fuse |
| OS100GJS30 | 1SCA115971R1001 | 26 | Side operated switch fuse |
| OS100GJS30K | 1SCA115942R1001 | 26 | Side operated switch fuse |
| OS100GJS40F | 1SCA115972R1001 | 26 | Side operated switch fuse |
| OS100GJS40FK | 1SCA115943R1001 | 26 | Side operated switch fuse |
| OS100GJS40N1 | 1SCA116764R1001 | 26 | Side operated switch fuse |
| OS100GJS40N2 | 1SCA116765R1001 | 26 | Side operated switch fuse |
| OS1200L03P | 1SCA105468R1001 | 20 | Front operated switch fuse |
| OS1250B03K | 1SCA108715R1001 | 17 | Front operated switch fuse |
| OS1250B03N3P | 1SCA107936R1001 | 16 | Front operated switch fuse |
| OS1250B03P | 1SCA105250R1001 | 16 | Front operated switch fuse |
| OS1250B04N2K | 1SCA108717R1001 | 17 | Front operated switch fuse |
| OS1250B04N2P | 1SCA105469R1001 | 16 | Front operated switch fuse |
| OS1250B12P | 1SCA105470R1001 | 16 | Front operated switch fuse |

# Index


| Type | Order number | Page | Description |
|---|---|---|---|
| OS1250B22N2P | 1SCA107937R1001 | 16 | Front operated switch fuse |
| OS1250D03K | 1SCA108718R1001 | 14 | Front operated switch fuse |
| OS1250D03N3P | 1SCA107932R1001 | 13 | Front operated switch fuse |
| OS1250D03P | 1SCA105475R1001 | 13 | Front operated switch fuse |
| OS1250D04FP | 1SCA105473R1001 | 13 | Front operated switch fuse |
| OS1250D04N2K | 1SCA108719R1001 | 14 | Front operated switch fuse |
| OS1250D04N2P | 1SCA105248R1001 | 13 | Front operated switch fuse |
| OS1250D12P | 1SCA105246R1001 | 13 | Front operated switch fuse |
| OS1250D22N2P | 1SCA107933R1001 | 13 | Front operated switch fuse |
| OS1250DA03K | 1SCA108720R1001 | 14 | Front operated switch fuse |
| OS1250DA03N3P | 1SCA107934R1001 | 13 | Front operated switch fuse |
| OS1250DA03P | 1SCA105238R1001 | 13 | Front operated switch fuse |
| OS1250DA04FP | 1SCA105240R1001 | 13 | Front operated switch fuse |
| OS1250DA04N2K | 1SCA108721R1001 | 14 | Front operated switch fuse |
| OS1250DA04N2P | 1SCA105243R1001 | 13 | Front operated switch fuse |
| OS1250DA12P | 1SCA105241R1001 | 13 | Front operated switch fuse |
| OS1250DA22N2P | 1SCA107935R1001 | 13 | Front operated switch fuse |
| OS125GB03K | 1SCA116751R1001 | 17 | Front operated switch fuse |
| OS125GB03P | 1SCA115634R1001 | 15 | Front operated switch fuse |
| OS125GB04N1K | 1SCA116752R1001 | 17 | Front operated switch fuse |
| OS125GB04N1P | 1SCA115901R1001 | 15 | Front operated switch fuse |
| OS125GB12P | 1SCA114603R1001 | 15 | Front operated switch fuse |
| OS125GB22N1P | 1SCA115903R1001 | 15 | Front operated switch fuse |
| OS125GBS30 | 1SCA116048R1001 | 23 | Side operated switch fuse |
| OS125GBS30K | 1SCA116400R1001 | 23 | Side operated switch fuse |
| OS125GBS40N1 | 1SCA115959R1001 | 23 | Side operated switch fuse |
| OS125GBS40N1K | 1SCA115926R1001 | 23 | Side operated switch fuse |
| OS125GBS40N2 | 1SCA116761R1001 | 23 | Side operated switch fuse |
| OS125GD03K | 1SCA116878R1001 | 14 | Front operated switch fuse |
| OS125GD03P | 1SCA115639R1001 | 12 | Front operated switch fuse |
| OS125GD04FK | 1SCA116741R1001 | 14 | Front operated switch fuse |
| OS125GD04FP | 1SCA115686R1001 | 12 | Front operated switch fuse |
| OS125GD04N2K | 1SCA116740R1001 | 14 | Front operated switch fuse |
| OS125GD04N2P | 1SCA115877R1001 | 12 | Front operated switch fuse |
| OS125GD12P | 1SCA115641R1001 | 12 | Front operated switch fuse |
| OS125GD22FP | 1SCA116732R1001 | 12 | Front operated switch fuse |
| OS125GD22N2P | 1SCA115880R1001 | 12 | Front operated switch fuse |
| OS125GDS30 | 1SCA115966R1001 | 21 | Side operated switch fuse |
| OS125GDS30K | 1SCA115933R1001 | 21 | Side operated switch fuse |
| OS125GDS40F | 1SCA116756R1001 | 21 | Side operated switch fuse |
| OS125GDS40N2 | 1SCA115967R1001 | 21 | Side operated switch fuse |
| OS125GDS40N2K | 1SCA115934R1001 | 21 | Side operated switch fuse |
| OS125GF03P | 1SCA115602R1001 | 18 | Front operated switch fuse |
| OS125GF04FP | 1SCA115606R1001 | 18 | Front operated switch fuse |
| OS125GF04N1P | 1SCA115888R1001 | 18 | Front operated switch fuse |
| OS125GF12P | 1SCA114624R1001 | 18 | Front operated switch fuse |
| OS125GF22FP | 1SCA115614R1001 | 18 | Front operated switch fuse |
| OS125GF22N1P | 1SCA115893R1001 | 18 | Front operated switch fuse |
| OS125GFS30 | 1SCA115973R1001 | 25 | Side operated switch fuse |
| OS125GFS30K | 1SCA115944R1001 | 25 | Side operated switch fuse |
| OS125GFS40F | 1SCA115975R1001 | 25 | Side operated switch fuse |
| OS125GFS40FK | 1SCA115946R1001 | 25 | Side operated switch fuse |
| OS125GFS40N1 | 1SCA115974R1001 | 25 | Side operated switch fuse |
| OS125GFS40N1K | 1SCA115945R1001 | 25 | Side operated switch fuse |
| OS160GB03K | 1SCA116753R1001 | 17 | Front operated switch fuse |
| OS160GB03P | 1SCA115413R1001 | 15 | Front operated switch fuse |
| OS160GB04N1K | 1SCA116754R1001 | 17 | Front operated switch fuse |
| OS160GB04N1P | 1SCA115896R1001 | 15 | Front operated switch fuse |
| OS160GB12P | 1SCA115637R1001 | 15 | Front operated switch fuse |
| OS160GB22N1P | 1SCA115899R1001 | 15 | Front operated switch fuse |
| OS160GBS30 | 1SCA115960R1001 | 23 | Side operated switch fuse |
| OS160GBS30K | 1SCA115927R1001 | 23 | Side operated switch fuse |
| OS160GBS40N1 | 1SCA115961R1001 | 23 | Side operated switch fuse |
| OS160GBS40N1K | 1SCA115928R1001 | 23 | Side operated switch fuse |
| OS160GBS40N2 | 1SCA116762R1001 | 23 | Side operated switch fuse |
| OS160GD03K | 1SCA116742R1001 | 14 | Front operated switch fuse |
| OS160GD03P | 1SCA115399R1001 | 12 | Front operated switch fuse |
| OS160GD04FK | 1SCA116880R1001 | 14 | Front operated switch fuse |
| OS160GD04FP | 1SCA115402R1001 | 12 | Front operated switch fuse |
| OS160GD04N2K | 1SCA116743R1001 | 14 | Front operated switch fuse |
| OS160GD04N2P | 1SCA115882R1001 | 12 | Front operated switch fuse |
| OS160GD12P | 1SCA115643R1001 | 12 | Front operated switch fuse |
| OS160GD22FP | 1SCA116855R1001 | 12 | Front operated switch fuse |
| OS160GD22N2P | 1SCA115884R1001 | 12 | Front operated switch fuse |
| OS160GDS30 | 1SCA115968R1001 | 21 | Side operated switch fuse |
| OS160GDS30K | 1SCA115935R1001 | 21 | Side operated switch fuse |
| OS160GDS40F | 1SCA116757R1001 | 21 | Side operated switch fuse |
| OS160GDS40N2 | 1SCA115969R1001 | 21 | Side operated switch fuse |
| OS160GDS40N2K | 1SCA115939R1001 | 21 | Side operated switch fuse |
| OS16FD1201 | 1SCA108788R1001 | 19 | Front operated switch fuse |
| OS16FD2201F | 1SCA108993R1001 | 19 | Front operated switch fuse |
| OS16FD2201N1 | 1SCA108789R1001 | 19 | Front operated switch fuse |
| OS16FDS3001 | 1SCA108994R1001 | 26 | Side operated switch fuse |
| OS16FDS4001F | 1SCA108996R1001 | 26 | Side operated switch fuse |
| OS16FDS4001N1 | 1SCA108995R1001 | 26 | Side operated switch fuse |
| OS200B03K | 1SCA022763R6950 | 17 | Front operated switch fuse |
| OS200B03N3P | 1SCA022750R0620 | 16 | Front operated switch fuse |
| OS200B03P | 1SCA022709R9330 | 16 | Front operated switch fuse |
| OS200B04N2K | 1SCA022763R7090 | 17 | Front operated switch fuse |
| OS200B04N2P | 1SCA022709R9410 | 16 | Front operated switch fuse |
| OS200B12P | 1SCA022721R3210 | 16 | Front operated switch fuse |
| OS200B22N2P | 1SCA022721R3300 | 16 | Front operated switch fuse |
| OS200BS03 | 1SCA022860R3810 | 24 | Side operated switch fuse |
| OS200BS03K | 1SCA022860R3990 | 24 | Side operated switch fuse |
| OS200BS04N2 | 1SCA022870R7510 | 24 | Side operated switch fuse |
| OS200BS04N2K | 1SCA022870R7690 | 24 | Side operated switch fuse |
| OS200BS30 | 1SCA022870R7770 | 24 | Side operated switch fuse |
| OS200BS30K | 1SCA022870R7850 | 24 | Side operated switch fuse |
| OS200BS40N2 | 1SCA022870R8150 | 24 | Side operated switch fuse |
| OS200BS40N2K | 1SCA022870R8230 | 24 | Side operated switch fuse |
| OS200D03K | 1SCA022764R7130 | 14 | Front operated switch fuse |
| OS200D03N3P | 1SCA022749R8710 | 13 | Front operated switch fuse |
| OS200D03P | 1SCA022709R9500 | 13 | Front operated switch fuse |
| OS200D04FP | 1SCA022725R4750 | 13 | Front operated switch fuse |
| OS200D04N2K | 1SCA022768R7430 | 14 | Front operated switch fuse |
| OS200D04N2P | 1SCA022709R9680 | 13 | Front operated switch fuse |
| OS200D12P | 1SCA022721R3050 | 13 | Front operated switch fuse |
| OS200D22N2P | 1SCA022721R3130 | 13 | Front operated switch fuse |
| OS200DS03 | 1SCA022871R0720 | 22 | Side operated switch fuse |
| OS200DS03K | 1SCA022871R0810 | 22 | Side operated switch fuse |
| OS200DS04F | 1SCA022871R0990 | 22 | Side operated switch fuse |
| OS200DS04FK | 1SCA022871R1020 | 22 | Side operated switch fuse |
| OS200DS30 | 1SCA022871R1370 | 22 | Side operated switch fuse |
| OS200DS30K | 1SCA022871R1450 | 22 | Side operated switch fuse |
| OS200DS40F | 1SCA022871R1530 | 22 | Side operated switch fuse |
| OS200DS40FK | 1SCA022871R1610 | 22 | Side operated switch fuse |
| OS200DZ03P | 1SCA022797R3440 | 13 | Front operated switch fuse |
| OS200DZ04N2P | 1SCA022820R9230 | 13 | Front operated switch fuse |
| OS200DZ12P | 1SCA022820R9150 | 13 | Front operated switch fuse |
| OS200J03P | 1SCA022709R9760 | 20 | Front operated switch fuse |
| OS20FB12A1 | 1SCA108790R1001 | 15 | Front operated switch fuse |
| OS20FB22A1N1 | 1SCA108796R1001 | 15 | Front operated switch fuse |
| OS20FBS30A1 | 1SCA108997R1001 | 23 | Side operated switch fuse |
| OS20FBS40A1N1 | 1SCA108998R1001 | 23 | Side operated switch fuse |
| OS250B03K | 1SCA022763R6010 | 17 | Front operated switch fuse |
| OS250B03N3P | 1SCA022750R8010 | 16 | Front operated switch fuse |
| OS250B03P | 1SCA022750R6660 | 16 | Front operated switch fuse |
| OS250B04N2K | 1SCA022763R6280 | 17 | Front operated switch fuse |
| OS250B04N2P | 1SCA022750R7800 | 16 | Front operated switch fuse |
| OS250B12P | 1SCA022778R9860 | 16 | Front operated switch fuse |
| OS250B22N2P | 1SCA022778R9940 | 16 | Front operated switch fuse |
| OS250BS03 | 1SCA022860R4370 | 24 | Side operated switch fuse |
| OS250BS03K | 1SCA022860R4450 | 24 | Side operated switch fuse |
| OS250BS04N2 | 1SCA022870R8310 | 24 | Side operated switch fuse |

# Index


| Type | Order number | Page | Description |
|---|---|---|---|
| OS250BS04N2 | 1SCA022870R8310 | 24 | Side operated switch fuse |
| OS250BS04N2K | 1SCA022870R8400 | 24 | Side operated switch fuse |
| OS250BS30 | 1SCA022870R8580 | 24 | Side operated switch fuse |
| OS250BS30K | 1SCA022870R8660 | 24 | Side operated switch fuse |
| OS250BS40N2 | 1SCA022870R8910 | 24 | Side operated switch fuse |
| OS250BS40N2K | 1SCA022870R9040 | 24 | Side operated switch fuse |
| OS250D03K | 1SCA022763R6360 | 14 | Front operated switch fuse |
| OS250D03N3P | 1SCA022749R9430 | 13 | Front operated switch fuse |
| OS250D03P | 1SCA022719R0090 | 13 | Front operated switch fuse |
| OS250D04FP | 1SCA022726R8620 | 13 | Front operated switch fuse |
| OS250D04N2K | 1SCA022763R6440 | 14 | Front operated switch fuse |
| OS250D04N2P | 1SCA022719R2380 | 13 | Front operated switch fuse |
| OS250D12P | 1SCA022726R8380 | 13 | Front operated switch fuse |
| OS250D22N2P | 1SCA022726R8460 | 13 | Front operated switch fuse |
| OS250DS03 | 1SCA022860R3050 | 22 | Side operated switch fuse |
| OS250DS03K | 1SCA022860R3130 | 22 | Side operated switch fuse |
| OS250DS04F | 1SCA022860R3210 | 22 | Side operated switch fuse |
| OS250DS04FK | 1SCA022860R3300 | 22 | Side operated switch fuse |
| OS250DS30 | 1SCA022871R2180 | 22 | Side operated switch fuse |
| OS250DS30K | 1SCA022871R2260 | 22 | Side operated switch fuse |
| OS250DS40F | 1SCA022871R2340 | 22 | Side operated switch fuse |
| OS250DS40FK | 1SCA022871R2420 | 22 | Side operated switch fuse |
| OS25FF1210 | 1SCA108636R1001 | 18 | Front operated switch fuse |
| OS25FF2210F | 1SCA108637R1001 | 18 | Front operated switch fuse |
| OS25FF2210N1 | 1SCA108638R1001 | 18 | Front operated switch fuse |
| OS25FFS3010 | 1SCA108639R1001 | 25 | Side operated switch fuse |
| OS25FFS4010F | 1SCA108640R1001 | 25 | Side operated switch fuse |
| OS25FFS4010N1 | 1SCA108661R1001 | 25 | Side operated switch fuse |
| OS30FACC12P | 1SCA108817R1001 | 19 | Front operated switch fuse |
| OS30FACC22FP | 1SCA108821R1001 | 19 | Front operated switch fuse |
| OS30FACCS30P | 1SCA108999R1001 | 26 | Side operated switch fuse |
| OS30FAJ12P | 1SCA108828R1001 | 19 | Front operated switch fuse |
| OS30FAJ22FP | 1SCA108831R1001 | 19 | Front operated switch fuse |
| OS30FAJS30P | 1SCA108838R1001 | 26 | Side operated switch fuse |
| OS315B03K | 1SCA022763R6520 | 17 | Front operated switch fuse |
| OS315B03N3P | 1SCA022753R8940 | 16 | Front operated switch fuse |
| OS315B03P | 1SCA022719R0680 | 16 | Front operated switch fuse |
| OS315B04N2K | 1SCA022763R6610 | 17 | Front operated switch fuse |
| OS315B04N2P | 1SCA022719R2710 | 16 | Front operated switch fuse |
| OS315B12P | 1SCA022753R2310 | 16 | Front operated switch fuse |
| OS315B22N2P | 1SCA022753R3390 | 16 | Front operated switch fuse |
| OS315BS03 | 1SCA022860R4700 | 24 | Side operated switch fuse |
| OS315BS03K | 1SCA022860R4880 | 24 | Side operated switch fuse |
| OS315BS04N2 | 1SCA022870R9120 | 24 | Side operated switch fuse |
| OS315BS04N2K | 1SCA022870R9210 | 24 | Side operated switch fuse |
| OS315BS30 | 1SCA022870R9390 | 24 | Side operated switch fuse |
| OS315BS30K | 1SCA022870R9470 | 24 | Side operated switch fuse |
| OS315BS40N2 | 1SCA022870R9710 | 24 | Side operated switch fuse |
| OS315BS40N2K | 1SCA022870R9800 | 24 | Side operated switch fuse |
| OS32FB12A1 | 1SCA108840R1001 | 15 | Front operated switch fuse |
| OS32FB12A2 | 1SCA108847R1001 | 15 | Front operated switch fuse |
| OS32FB12F1 | 1SCA108851R1001 | 15 | Front operated switch fuse |
| OS32FB22A1N1 | 1SCA108853R1001 | 15 | Front operated switch fuse |
| OS32FB22A2N1 | 1SCA108863R1001 | 15 | Front operated switch fuse |
| OS32FB22F1N1 | 1SCA109003R1001 | 15 | Front operated switch fuse |
| OS32FBS30A1 | 1SCA108877R1001 | 23 | Side operated switch fuse |
| OS32FBS30A2 | 1SCA108882R1001 | 23 | Side operated switch fuse |
| OS32FBS30F1 | 1SCA109004R1001 | 23 | Side operated switch fuse |
| OS32FBS40A1N1 | 1SCA109006R1001 | 23 | Side operated switch fuse |
| OS32FBS40A2N1 | 1SCA109007R1001 | 23 | Side operated switch fuse |
| OS32FBS40F1N1 | 1SCA109005R1001 | 23 | Side operated switch fuse |
| OS32FF1214 | 1SCA108642R1001 | 18 | Front operated switch fuse |
| OS32FF2214F | 1SCA108643R1001 | 18 | Front operated switch fuse |
| OS32FF2214N1 | 1SCA108645R1001 | 18 | Front operated switch fuse |
| OS32FFS3014 | 1SCA108646R1001 | 25 | Side operated switch fuse |
| OS32FFS4014F | 1SCA108647R1001 | 25 | Side operated switch fuse |
| OS32FFS4014N1 | 1SCA108649R1001 | 25 | Side operated switch fuse |
| OS32GB03K | 1SCA116744R1001 | 17 | Front operated switch fuse |
| OS32GB03P | 1SCA115259R1001 | 15 | Front operated switch fuse |
| OS32GB04N1K | 1SCA116856R1001 | 17 | Front operated switch fuse |
| OS32GB04N1P | 1SCA114610R1001 | 15 | Front operated switch fuse |
| OS32GB12P | 1SCA115331R1001 | 15 | Front operated switch fuse |
| OS32GB22N1P | 1SCA115345R1001 | 15 | Front operated switch fuse |
| OS32GBS30 | 1SCA115955R1001 | 23 | Side operated switch fuse |
| OS32GBS30K | 1SCA115918R1001 | 23 | Side operated switch fuse |
| OS32GBS40N1 | 1SCA115956R1001 | 23 | Side operated switch fuse |
| OS32GBS40N1K | 1SCA115923R1001 | 23 | Side operated switch fuse |
| OS32GD03K | 1SCA116733R1001 | 14 | Front operated switch fuse |
| OS32GD03P | 1SCA115189R1001 | 12 | Front operated switch fuse |
| OS32GD04FK | 1SCA116737R1001 | 14 | Front operated switch fuse |
| OS32GD04FP | 1SCA115196R1001 | 12 | Front operated switch fuse |
| OS32GD04N2K | 1SCA116734R1001 | 14 | Front operated switch fuse |
| OS32GD04N2P | 1SCA115193R1001 | 12 | Front operated switch fuse |
| OS32GD12P | 1SCA114581R1001 | 12 | Front operated switch fuse |
| OS32GD22FP | 1SCA115205R1001 | 12 | Front operated switch fuse |
| OS32GD22N2P | 1SCA115202R1001 | 12 | Front operated switch fuse |
| OS32GDS30 | 1SCA115963R1001 | 21 | Side operated switch fuse |
| OS32GDS30K | 1SCA115929R1001 | 21 | Side operated switch fuse |
| OS32GDS40F | 1SCA116755R1001 | 21 | Side operated switch fuse |
| OS32GDS40N1K | 1SCA115930R1001 | 21 | Side operated switch fuse |
| OS32GDS40N2 | 1SCA116046R1001 | 21 | Side operated switch fuse |
| OS32GDS40N2K | 1SCA116402R1001 | 21 | Side operated switch fuse |
| OS35FD1202 | 1SCA108908R1001 | 19 | Front operated switch fuse |
| OS35FD2202F | 1SCA109008R1001 | 19 | Front operated switch fuse |
| OS35FD2202N1 | 1SCA108911R1001 | 19 | Front operated switch fuse |
| OS35FDS3002 | 1SCA109009R1001 | 26 | Side operated switch fuse |
| OS35FDS4002F | 1SCA109011R1001 | 26 | Side operated switch fuse |
| OS35FDS4002N1 | 1SCA109010R1001 | 26 | Side operated switch fuse |
| OS400B03K | 1SCA022763R6790 | 17 | Front operated switch fuse |
| OS400B03N3P | 1SCA022753R9160 | 16 | Front operated switch fuse |
| OS400B03P | 1SCA022719R0840 | 16 | Front operated switch fuse |
| OS400B04N2K | 1SCA022763R6870 | 17 | Front operated switch fuse |
| OS400B04N2P | 1SCA022719R2890 | 16 | Front operated switch fuse |
| OS400B12P | 1SCA022753R3470 | 16 | Front operated switch fuse |
| OS400B22N2P | 1SCA022753R7200 | 16 | Front operated switch fuse |
| OS400BS03 | 1SCA022860R5180 | 24 | Side operated switch fuse |
| OS400BS03K | 1SCA022860R5260 | 24 | Side operated switch fuse |
| OS400BS04N2 | 1SCA022870R9980 | 24 | Side operated switch fuse |
| OS400BS04N2K | 1SCA022871R0050 | 24 | Side operated switch fuse |
| OS400BS30 | 1SCA022871R0130 | 24 | Side operated switch fuse |
| OS400BS30K | 1SCA022871R0210 | 24 | Side operated switch fuse |
| OS400BS40N2 | 1SCA022871R0560 | 24 | Side operated switch fuse |
| OS400BS40N2K | 1SCA022871R0640 | 24 | Side operated switch fuse |
| OS400D03K | 1SCA022779R5410 | 14 | Front operated switch fuse |
| OS400D03N3P | 1SCA022753R9320 | 13 | Front operated switch fuse |
| OS400D03P | 1SCA022719R0250 | 13 | Front operated switch fuse |
| OS400D04FP | 1SCA022753R7110 | 13 | Front operated switch fuse |
| OS400D04N2K | 1SCA022763R7250 | 14 | Front operated switch fuse |
| OS400D04N2P | 1SCA022719R2460 | 13 | Front operated switch fuse |
| OS400D12P | 1SCA022753R3800 | 13 | Front operated switch fuse |
| OS400D22N2P | 1SCA022753R1770 | 13 | Front operated switch fuse |
| OS400DS03 | 1SCA022860R3480 | 22 | Side operated switch fuse |
| OS400DS03K | 1SCA022860R3560 | 22 | Side operated switch fuse |
| OS400DS04F | 1SCA022860R3640 | 22 | Side operated switch fuse |
| OS400DS04FK | 1SCA022860R3720 | 22 | Side operated switch fuse |
| OS400DS30 | 1SCA022871R2850 | 22 | Side operated switch fuse |
| OS400DS30K | 1SCA022871R2930 | 22 | Side operated switch fuse |
| OS400DS40F | 1SCA022871R3070 | 22 | Side operated switch fuse |
| OS400DS40FK | 1SCA022871R3150 | 22 | Side operated switch fuse |
| OS400J03P | 1SCA022719R1140 | 20 | Front operated switch fuse |
| OS40FD12000 | 1SCA108914R1001 | 12 | Front operated switch fuse |
| OS40FD22000N1 | 1SCA108938R1001 | 12 | Front operated switch fuse |
| OS40FDS30000 | 1SCA108942R1001 | 21 | Side operated switch fuse |
| OS40FDS30000-N | 1SCA109012R1001 | 21 | Side operated switch fuse |

# Index


| Type | Order number | Page | Description |
|---|---|---|---|
| OS40FDS40000N1 | 1SCA108954R1001 | 21 | Side operated switch fuse |
| OS50GF03P | 1SCA115492R1001 | 18 | Front operated switch fuse |
| OS50GF04FP | 1SCA115498R1001 | 18 | Front operated switch fuse |
| OS50GF04N1P | 1SCA115495R1001 | 18 | Front operated switch fuse |
| OS50GF12P | 1SCA115553R1001 | 18 | Front operated switch fuse |
| OS50GF22FP | 1SCA114623R1001 | 18 | Front operated switch fuse |
| OS50GF22N1P | 1SCA114622R1001 | 18 | Front operated switch fuse |
| OS50GFS30 | 1SCA116050R1001 | 25 | Side operated switch fuse |
| OS50GFS30K | 1SCA116404R1001 | 25 | Side operated switch fuse |
| OS50GFS40F | 1SCA116014R1001 | 25 | Side operated switch fuse |
| OS50GFS40FK | 1SCA116425R1001 | 25 | Side operated switch fuse |
| OS50GFS40N1 | 1SCA116058R1001 | 25 | Side operated switch fuse |
| OS50GFS40N1K | 1SCA116013R1001 | 25 | Side operated switch fuse |
| OS600J03P | 1SCA022825R8870 | 20 | Front operated switch fuse |
| OS60GJ03P | 1SCA115443R1001 | 19 | Front operated switch fuse |
| OS60GJ04FP | 1SCA115446R1001 | 19 | Front operated switch fuse |
| OS60GJ04N1P | 1SCA116736R1001 | 19 | Front operated switch fuse |
| OS60GJ12P | 1SCA115449R1001 | 19 | Front operated switch fuse |
| OS60GJ22FP | 1SCA115469R1001 | 19 | Front operated switch fuse |
| OS60GJ22N1P | 1SCA116735R1001 | 19 | Front operated switch fuse |
| OS60GJS30 | 1SCA116051R1001 | 26 | Side operated switch fuse |
| OS60GJS30K | 1SCA116426R1001 | 26 | Side operated switch fuse |
| OS60GJS40F | 1SCA115970R1001 | 26 | Side operated switch fuse |
| OS60GJS40FK | 1SCA115941R1001 | 26 | Side operated switch fuse |
| OS60GJS40N1 | 1SCA116763R1001 | 26 | Side operated switch fuse |
| OS630B03K | 1SCA108708R1001 | 17 | Front operated switch fuse |
| OS630B03N3P | 1SCA100860R1001 | 16 | Front operated switch fuse |
| OS630B03P | 1SCA022825R5850 | 16 | Front operated switch fuse |
| OS630B04N2K | 1SCA108710R1001 | 17 | Front operated switch fuse |
| OS630B04N2P | 1SCA022825R6230 | 16 | Front operated switch fuse |
| OS630B12P | 1SCA022825R6400 | 16 | Front operated switch fuse |
| OS630B22N2P | 1SCA022825R6660 | 16 | Front operated switch fuse |
| OS630BS03 | 1SCA108141R1001 | 24 | Side operated switch fuse |
| OS630BS03K | 1SCA108142R1001 | 24 | Side operated switch fuse |
| OS630BS04N2 | 1SCA108145R1001 | 24 | Side operated switch fuse |
| OS630BS04N2K | 1SCA108146R1001 | 24 | Side operated switch fuse |
| OS630BS30 | 1SCA108147R1001 | 24 | Side operated switch fuse |
| OS630BS30K | 1SCA108148R1001 | 24 | Side operated switch fuse |
| OS630BS40N2 | 1SCA108152R1001 | 24 | Side operated switch fuse |
| OS630BS40N2K | 1SCA108151R1001 | 24 | Side operated switch fuse |
| OS630D03K | 1SCA108704R1001 | 14 | Front operated switch fuse |
| OS630D03N3P | 1SCA100858R1001 | 13 | Front operated switch fuse |
| OS630D03P | 1SCA022825R2830 | 13 | Front operated switch fuse |
| OS630D04FP | 1SCA022825R4610 | 13 | Front operated switch fuse |
| OS630D04N2K | 1SCA108705R1001 | 14 | Front operated switch fuse |
| OS630D04N2P | 1SCA022825R4290 | 13 | Front operated switch fuse |
| OS630D12P | 1SCA022825R3810 | 13 | Front operated switch fuse |
| OS630D22N2P | 1SCA022825R4450 | 13 | Front operated switch fuse |
| OS630DS03 | 1SCA108128R1001 | 22 | Side operated switch fuse |
| OS630DS03K | 1SCA108129R1001 | 22 | Side operated switch fuse |
| OS630DS04F | 1SCA108131R1001 | 22 | Side operated switch fuse |
| OS630DS04FK | 1SCA108132R1001 | 22 | Side operated switch fuse |
| OS630DS30 | 1SCA108135R1001 | 22 | Side operated switch fuse |
| OS630DS30K | 1SCA108136R1001 | 22 | Side operated switch fuse |
| OS630DS40F | 1SCA108137R1001 | 22 | Side operated switch fuse |
| OS630DS40FK | 1SCA108138R1001 | 22 | Side operated switch fuse |
| OS63GB03K | 1SCA116745R1001 | 17 | Front operated switch fuse |
| OS63GB03P | 1SCA115235R1001 | 15 | Front operated switch fuse |
| OS63GB04N1K | 1SCA116746R1001 | 17 | Front operated switch fuse |
| OS63GB04N1P | 1SCA115238R1001 | 15 | Front operated switch fuse |
| OS63GB12P | 1SCA115325R1001 | 15 | Front operated switch fuse |
| OS63GB22N1P | 1SCA114601R1001 | 15 | Front operated switch fuse |
| OS63GBS30 | 1SCA115957R1001 | 23 | Side operated switch fuse |
| OS63GBS30K | 1SCA115924R1001 | 23 | Side operated switch fuse |
| OS63GBS40N1 | 1SCA115978R1001 | 23 | Side operated switch fuse |
| OS63GBS40N1K | 1SCA115979R1001 | 23 | Side operated switch fuse |
| OS63GD03K | 1SCA116738R1001 | 14 | Front operated switch fuse |
| OS63GD03P | 1SCA115207R1001 | 12 | Front operated switch fuse |
| OS63GD04FK | 1SCA116739R1001 | 14 | Front operated switch fuse |
| OS63GD04FP | 1SCA115228R1001 | 12 | Front operated switch fuse |
| OS63GD04N2K | 1SCA116876R1001 | 14 | Front operated switch fuse |
| OS63GD04N2P | 1SCA115209R1001 | 12 | Front operated switch fuse |
| OS63GD12P | 1SCA115227R1001 | 12 | Front operated switch fuse |
| OS63GD22FP | 1SCA115232R1001 | 12 | Front operated switch fuse |
| OS63GD22N2P | 1SCA115230R1001 | 12 | Front operated switch fuse |
| OS63GDS30 | 1SCA116007R1001 | 21 | Side operated switch fuse |
| OS63GDS30K | 1SCA115931R1001 | 21 | Side operated switch fuse |
| OS63GDS40F | 1SCA116877R1001 | 21 | Side operated switch fuse |
| OS63GDS40N1K | 1SCA115932R1001 | 21 | Side operated switch fuse |
| OS63GDS40N2 | 1SCA116047R1001 | 21 | Side operated switch fuse |
| OS63GDS40N2K | 1SCA116403R1001 | 21 | Side operated switch fuse |
| OS800B03K | 1SCA108713R1001 | 17 | Front operated switch fuse |
| OS800B03N3P | 1SCA100861R1001 | 16 | Front operated switch fuse |
| OS800B03P | 1SCA022825R7550 | 16 | Front operated switch fuse |
| OS800B04N2K | 1SCA108714R1001 | 17 | Front operated switch fuse |
| OS800B04N2P | 1SCA022825R8010 | 16 | Front operated switch fuse |
| OS800B12P | 1SCA022825R8280 | 16 | Front operated switch fuse |
| OS800B22N2P | 1SCA022825R8440 | 16 | Front operated switch fuse |
| OS800BS03 | 1SCA108076R1001 | 24 | Side operated switch fuse |
| OS800BS03K | 1SCA108077R1001 | 24 | Side operated switch fuse |
| OS800BS04N2 | 1SCA108081R1001 | 24 | Side operated switch fuse |
| OS800BS04N2K | 1SCA108082R1001 | 24 | Side operated switch fuse |
| OS800BS30 | 1SCA108083R1001 | 24 | Side operated switch fuse |
| OS800BS30K | 1SCA108084R1001 | 24 | Side operated switch fuse |
| OS800BS40N2 | 1SCA108086R1001 | 24 | Side operated switch fuse |
| OS800BS40N2K | 1SCA108087R1001 | 24 | Side operated switch fuse |
| OS800D03K | 1SCA108725R1001 | 14 | Front operated switch fuse |
| OS800D03N3P | 1SCA100859R1001 | 13 | Front operated switch fuse |
| OS800D03P | 1SCA022825R4880 | 13 | Front operated switch fuse |
| OS800D04FP | 1SCA022825R5000 | 13 | Front operated switch fuse |
| OS800D04N2K | 1SCA108722R1001 | 14 | Front operated switch fuse |
| OS800D04N2P | 1SCA022825R5180 | 13 | Front operated switch fuse |
| OS800D12P | 1SCA022825R5340 | 13 | Front operated switch fuse |
| OS800D22N2P | 1SCA022825R5510 | 13 | Front operated switch fuse |
| OS800DS03 | 1SCA108092R1001 | 22 | Side operated switch fuse |
| OS800DS03K | 1SCA108093R1001 | 22 | Side operated switch fuse |
| OS800DS04F | 1SCA108094R1001 | 22 | Side operated switch fuse |
| OS800DS04FK | 1SCA108095R1001 | 22 | Side operated switch fuse |
| OS800DS30 | 1SCA108098R1001 | 22 | Side operated switch fuse |
| OS800DS30K | 1SCA108093R1001 | 22 | Side operated switch fuse |
| OS800DS40F | 1SCA108100R1001 | 22 | Side operated switch fuse |
| OS800DS40FK | 1SCA108101R1001 | 22 | Side operated switch fuse |
| OS800L03P | 1SCA022825R9920 | 20 | Front operated switch fuse |
| OSD25P3 | 1SCA022192R9060 | 43 | Blown fuse indicator (DPMM) |
| OSD25P4 | 1SCA022196R9520 | 43 | Blown fuse indicator (DPMM) |
| OSGD125P3 | 1SCA115690R1001 | 43 | Blown fuse indicator (DPMM) |
| OSGD125P4 | 1SCA115692R1001 | 43 | Blown fuse indicator (DPMM) |
| OSGD50P3 | 1SCA116401R1001 | 43 | Blown fuse indicator (DPMM) |
| OSGD50P4 | 1SCA115689R1001 | 43 | Blown fuse indicator (DPMM) |
| OSGZD1 | 1SCA115688R1001 | 44 | DIN-rail mounting kit |
| OSP1250B | 1SCA107950R1001 | 36 | Fourth Pole |
| OSP1250D | 1SCA107946R1001 | 36 | Fourth Pole |
| OSP1250DA | 1SCA112402R1001 | 36 | Fourth Pole |
| OSP1250N | 1SCA107943R1001 | 36 | Fourth Pole |
| OSP160GB | 1SCA114769R1001 | 36 | Fourth Pole |
| OSP160GD | 1SCA114768R1001 | 36 | Fourth Pole |
| OSP160GN | 1SCA114770R1001 | 36 | Fourth Pole |
| OSP200B | 1SCA022735R9180 | 36 | Fourth Pole |

# Index


| Type | Order number | Page | Description |
|---|---|---|---|
| OSP200D | 1SCA022735R8960 | 36 | Fourth Pole |
| OSP200N | 1SCA022735R8700 | 36 | Fourth Pole |
| OSP250B | 1SCA022770R4030 | 36 | Fourth Pole |
| OSP250D | 1SCA022735R9340 | 36 | Fourth Pole |
| OSP250N | 1SCA022735R9260 | 36 | Fourth Pole |
| OSP400B | 1SCA022770R3140 | 36 | Fourth Pole |
| OSP400D | 1SCA022770R3220 | 36 | Fourth Pole |
| OSP400N | 1SCA022770R3490 | 36 | Fourth Pole |
| OSP800B | 1SCA100434R1001 | 36 | Fourth Pole |
| OSP800D | 1SCA100433R1001 | 36 | Fourth Pole |
| OSP800N | 1SCA100432R1001 | 36 | Fourth Pole |
| OSS1250G1L/3 | 1SCA107938R1001 | 38 | Terminal shroud |
| OSS1250G1L/4 | 1SCA107940R1001 | 38 | Terminal shroud |
| OSS1250G1S/3 | 1SCA107939R1001 | 38 | Terminal shroud |
| OSS1250G1S/4 | 1SCA107941R1001 | 38 | Terminal shroud |
| OSS160GG1L/3 | 1SCA114764R1001 | 38 | Terminal shroud |
| OSS160GG1L/4 | 1SCA114765R1001 | 38 | Terminal shroud |
| OSS160GG1S/3 | 1SCA114766R1001 | 38 | Terminal shroud |
| OSS160GG1S/4 | 1SCA114767R1001 | 38 | Terminal shroud |
| OSS200G1L/3 | 1SCA022731R8910 | 38 | Terminal shroud |
| OSS200G1L/4 | 1SCA022731R9040 | 38 | Terminal shroud |
| OSS200G1S/3 | 1SCA022732R0130 | 38 | Terminal shroud |
| OSS200G1S/4 | 1SCA022732R0050 | 38 | Terminal shroud |
| OSS250G1L | 1SCA022727R5080 | 38 | Terminal shroud |
| OSS250G1L/3 | 1SCA022731R9390 | 38 | Terminal shroud |
| OSS250G1L/4 | 1SCA022731R9470 | 38 | Terminal shroud |
| OSS250G1S | 1SCA022727R4940 | 38 | Terminal shroud |
| OSS250G1S/3 | 1SCA022731R9550 | 38 | Terminal shroud |
| OSS250G1S/4 | 1SCA022731R9630 | 38 | Terminal shroud |
| OSS400G1L/3 | 1SCA022776R6650 | 38 | Terminal shroud |
| OSS400G1L/4 | 1SCA022776R6730 | 38 | Terminal shroud |
| OSS400G1S/3 | 1SCA022776R6900 | 38 | Terminal shroud |
| OSS400G1S/4 | 1SCA022776R7030 | 38 | Terminal shroud |
| OSS800G1L/3 | 1SCA022776R7200 | 38 | Terminal shroud |
| OSS800G1L/4 | 1SCA022776R7380 | 38 | Terminal shroud |
| OSS800G1S/3 | 1SCA022776R7540 | 38 | Terminal shroud |
| OSS800G1S/4 | 1SCA022776R7460 | 38 | Terminal shroud |
| OSV1250DK | 1SCA107797R1001 | 31 | Direct mounted handle |
| OSV200BK | 1SCA022779R7530 | 31 | Direct mounted handle |
| OSV250DK | 1SCA022763R3510 | 31 | Direct mounted handle |
| OSV400BK | 1SCA022763R3930 | 31 | Direct mounted handle |
| OSV400DK | 1SCA022763R4230 | 31 | Direct mounted handle |
| OSV800DK | 1SCA107794R1001 | 31 | Direct mounted handle |
| OSVY1250DK | 1SCA108702R1001 | 31 | Direct mounted handle |
| OSVY200BK | 1SCA022779R7700 | 31 | Direct mounted handle |
| OSVY250DK | 1SCA022778R6500 | 31 | Direct mounted handle |
| OSVY400BK | 1SCA022779R5830 | 31 | Direct mounted handle |
| OSVY400DK | 1SCA022779R5590 | 31 | Direct mounted handle |
| OSVY800DK | 1SCA108703R1001 | 31 | Direct mounted handle |
| OSZ1 | 1SCA022481R3710 | 36 | Neutral link |
| OSZ2 | 1SCA022481R3800 | 36 | Neutral link |
| OSZ4 | 1SCA022530R0200 | 34 | Mounting frame for auxiliary contacts |
| OSZ4 | 1SCA022530R0200 | 43 | Mounting accessory for fuse monitor |
| OSZT1A | 1SCA106532R1001 | 44 | Mechanism interlock kits & Electrical interlocks |
| OSZT1L | 1SCA106538R1001 | 44 | Mechanism interlock kits & Electrical interlocks |
| OSZT2A | 1SCA106534R1001 | 44 | Mechanism interlock kits & Electrical interlocks |
| OSZT2L | 1SCA106539R1001 | 44 | Mechanism interlock kits & Electrical interlocks |
| OSZT3A | 1SCA106535R1001 | 44 | Mechanism interlock kits & Electrical interlocks |
| OSZT3L | 1SCA106540R1001 | 44 | Mechanism interlock kits & Electrical interlocks |
| OSZT4A | 1SCA106536R1001 | 44 | Mechanism interlock kits & Electrical interlocks |
| OSZT4L | 1SCA106541R1001 | 44 | Mechanism interlock kits & Electrical interlocks |
| OSZX3 | 1SCA101224R1001 | 43 | Blown fuse indicator (DPMM) |
| OSZX4 | 1SCA101225R1001 | 43 | Blown fuse indicator (DPMM) |
| OTS1600G1L | 1SCA106134R1001 | 38 | Terminal shroud |
| OTS1600G1S | 1SCA102667R1001 | 38 | Terminal shroud |
| OTS250G1L | 1SCA022715R5340 | 38 | Terminal shroud |
| OTS250G1S | 1SCA022715R5260 | 38 | Terminal shroud |
| OTS800G1L | 1SCA022776R7710 | 38 | Terminal shroud |
| OTS800G1S | 1SCA022776R8010 | 38 | Terminal shroud |
| OTZT1A | 1SCA106522R1001 | 44 | Mechanism interlock kits & Electrical interlocks |
| OTZT1L | 1SCA106527R1001 | 44 | Mechanism interlock kits & Electrical interlocks |
| OTZW10 | 1SCA022431R5280 | 41 | Conversion kit |
| OTZW25 | 1SCA022778R6920 | 41 | Conversion kit |
| OTZW26 | 1SCA022778R7060 | 41 | Conversion kit |
| OWC6DSH1 | 1SCA105251R1001 | 41 | Conversion kit |
| OWC6DSH2 | 1SCA105252R1001 | 41 | Conversion kit |
| OWM6DS1 | 1SCA105253R1001 | 41 | Conversion kit |
| OWM6DS2 | 1SCA105254R1001 | 41 | Conversion kit |
| OWP6DS1 | 1SCA105255R1001 | 41 | Conversion kit |
| OWP6DS2 | 1SCA105256R1001 | 41 | Conversion kit |
| OXN1250S | 1SCA104163R1001 | 36 | Neutral link |
| OXN250 | 1SCA022752R9950 | 36 | Neutral link |
| OXN400 | 1SCA022770R3060 | 36 | Neutral link |
| OXN800S | 1SCA022831R4880 | 36 | Neutral link |
| OXP12X250 | 1SCA022325R6980 | 33 | Shaft |
| OXP12X280 | 1SCA022137R5140 | 33 | Shaft |
| OXP12X280-45 | 1SCA022382R0800 | 33 | Shaft |
| OXP12X325 | 1SCA022042R5810 | 33 | Shaft |
| OXP12X325-45 | 1SCA022304R4450 | 33 | Shaft |
| OXP12X395 | 1SCA022042R5990 | 33 | Shaft |
| OXP12X465 | 1SCA022042R6020 | 33 | Shaft |
| OXP12X535 | 1SCA022042R6110 | 33 | Shaft |
| OXP6X130 | 1SCA022057R0570 | 32 | Shaft |
| OXP6X150-45 | 1SCA022294R4400 | 32 | Shaft |
| OXP6X150 | 1SCA022295R5600 | 32 | Shaft |
| OXP6X161 | 1SCA022067R1760 | 32 | Shaft |
| OXP6X170 | 1SCA108224R1001 | 32 | Shaft |
| OXP6X170-45 | 1SCA108227R1001 | 32 | Shaft |
| OXP6X210 | 1SCA022295R6080 | 32 | Shaft |
| OXP6X210-45 | 1SCA022294R4230 | 32 | Shaft |
| OXP6X265 | 1SCA108225R1001 | 32 | Shaft |
| OXP6X265-45 | 1SCA108228R1001 | 32 | Shaft |
| OXP6X290 | 1SCA022042R6370 | 32 | Shaft |
| OXP6X290-45 | 1SCA022304R4290 | 32 | Shaft |
| OXP6X360 | 1SCA022042R6530 | 32 | Shaft |
| OXP6X360-45 | 1SCA022341R4640 | 32 | Shaft |
| OXP6X400 | 1SCA108226R1001 | 32 | Shaft |
| OXP6X400-45 | 1SCA108229R1001 | 32 | Shaft |
| OXP6X430 | 1SCA022056R6030 | 32 | Shaft |
| OXP6X63 | 1SCA111010R1001 | 32 | Shaft |
| OXP6X90 | 1SCA022064R1180 | 32 | Shaft |
| OZXB1L | 1SCA022169R2030 | 39 | Terminal clamp set |
| OZXB1L/1 | 1SCA022194R0030 | 39 | Terminal clamp set |
| OZXB2 | 1SCA022119R7610 | 39 | Terminal clamp set |
| OZXB2/1 | 1SCA022194R0200 | 39 | Terminal clamp set |
| OZXB2L | 1SCA022158R7750 | 39 | Terminal clamp set |
| OZXB2L/1 | 1SCA022194R0460 | 39 | Terminal clamp set |
| OZXB3 | 1SCA022136R8100 | 39 | Terminal clamp set |
| OZXB3 | 1SCA022136R8100 | 40 | Terminal clamp set |
| OZXB3/1 | 1SCA022194R0620 | 39 | Terminal clamp set |

# Index


| Type | Order number | Page | Description |
|---|---|---|---|
| OZXB3/1 | 1SCA022194R0620 | 40 | Terminal clamp set |
| OZXB4 | 1SCA022137R4760 | 39 | Terminal clamp set |
| OZXB4 | 1SCA022137R4760 | 40 | Terminal clamp set |
| OZXB4/1 | 1SCA022194R0890 | 39 | Terminal clamp set |
| OZXB4/1 | 1SCA022194R0890 | 40 | Terminal clamp set |
| OZXB5 | 1SCA022137R2470 | 39 | Terminal clamp set |
| OZXB5 | 1SCA022137R2470 | 40 | Terminal clamp set |
| OZXB5/1 | 1SCA022194R1010 | 39 | Terminal clamp set |
| OZXB5/1 | 1SCA022194R1010 | 40 | Terminal clamp set |
| OZXB6 | 1SCA022137R4920 | 39 | Terminal clamp set |
| OZXB6 | 1SCA022137R4920 | 40 | Terminal clamp set |
| OZXB6/1 | 1SCA022194R1270 | 39 | Terminal clamp set |
| OZXB6/1 | 1SCA022194R1270 | 40 | Terminal clamp set |
| OZXB7 | 1SCA022185R0040 | 39 | Terminal clamp set |
| OZXB7/1 | 1SCA022194R1430 | 39 | Terminal clamp set |
| OZXB7L | 1SCA022185R7130 | 39 | Terminal clamp set |
| OZXB7L | 1SCA022185R7130 | 40 | Terminal clamp set |
| OZXB7L/1 | 1SCA022194R1600 | 39 | Terminal clamp set |
| OZXB7L/1 | 1SCA022194R1600 | 40 | Terminal clamp set |
| OZXB8 | 1SCA022744R1510 | 39 | Terminal clamp set |
| OZXB8 | 1SCA022744R1510 | 40 | Terminal clamp set |
| OZXB8/1 | 1SCA022744R1600 | 39 | Terminal clamp set |
| OZXB8/1 | 1SCA022744R1600 | 40 | Terminal clamp set |
| OZXB9 | 1SCA022750R3210 | 39 | Terminal clamp set |
| OZXB9 | 1SCA022750R3210 | 40 | Terminal clamp set |
| OZXB9/1 | 1SCA022750R3300 | 39 | Terminal clamp set |
| OZXB9/1 | 1SCA022750R3300 | 40 | Terminal clamp set |
| OZXP120 | 1SCA115540R1001 | 40 | Terminal clamp set |
| OZXP150 | 1SCA115541R1001 | 40 | Terminal clamp set |
| OZXP240 | 1SCA115542R1001 | 40 | Terminal clamp set |
| OZXP2X240 | 1SCA115544R1001 | 40 | Terminal clamp set |
| OZXP300 | 1SCA115543R1001 | 40 | Terminal clamp set |
| OZXP95 | 1SCA115539R1001 | 40 | Terminal clamp set |
| OZXR185 | 1SCA115531R1001 | 40 | Terminal clamp set |
| OZXR240 | 1SCA115532R1001 | 40 | Terminal clamp set |
| OZXR2X185 | 1SCA115534R1001 | 40 | Terminal clamp set |
| OZXR2X300 | 1SCA115535R1001 | 40 | Terminal clamp set |
| OZXR300 | 1SCA115533R1001 | 40 | Terminal clamp set |
| OZXR70 | 1SCA115529R1001 | 40 | Terminal clamp set |
| OZXR95 | 1SCA115530R1001 | 40 | Terminal clamp set |
| OZXT1 | 1SCA022469R6310 | 39 | Terminal clamp set |
| OZXT1/1 | 1SCA022469R6490 | 39 | Terminal clamp set |
| PB100 low | 1SDA054970R1 | 38 | Phase barrier |
| PB100 low | 1SDA054971R1 | 38 | Phase barrier |
| PB200 high | 1SDA054972R1 | 38 | Phase barrier |
| PB200 high | 1SDA054973R1 | 38 | Phase barrier |
| PDAL2/110AC50Hz | 1SCA106543R1001 | 44 | Coil |
| PDAL2/110AC60Hz | 1SCA107100R1001 | 44 | Coil |
| PDAL2/110DC | 1SCA107105R1001 | 44 | Coil |
| PDAL2/120AC60Hz | 1SCA111353R1001 | 44 | Coil |
| PDAL2/125DC | 1SCA111338R1001 | 44 | Coil |
| PDAL2/208AC60Hz | 1SCA107101R1001 | 44 | Coil |
| PDAL2/220DC | 1SCA112503R1001 | 44 | Coil |
| PDAL2/230AC50Hz | 1SCA107102R1001 | 44 | Coil |
| PDAL2/240AC60Hz | 1SCA111356R1001 | 44 | Coil |
| PDAL2/24AC60Hz | 1SCA111350R1001 | 44 | Coil |
| PDAL2/24DC | 1SCA106542R1001 | 44 | Coil |
| PDAL2/48DC | 1SCA107103R1001 | 44 | Coil |
| PDAL2/60DC | 1SCA107104R1001 | 44 | Coil |
| YASDA 7 | 1SCA022071R3010 | 30 | Handle |
| YASDA 8 | 1SCA022071R3270 | 30 | Handle |
| YASDA35 | 1SCA104400R1001 | 30 | Handle |

# Contact us

**ABB Oy**
**Low Voltage Products**
P.O. Box 622
FI-65101 Vaasa, Finland
Phone: +358 10 22 11
Fax: +358 22 45708
E-Mail: firstname.surname@fi.abb.com

**www.abb.com**

The technical data and dimensions are valid at the time of printing. We reserve the right to subsequent alterations.

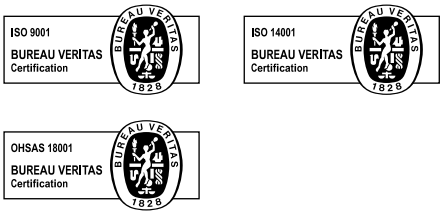


Catalogue OS1GB 09-12, 1SCC311013C0201

Producted by A&V Insinöörit Oy / Tekninen viestintä, Vaasa, Finland

Power and productivity
for a better world™