Your Expert Partner for **Human Machine Interfaces**

Actuator

Distribution by
Rs-online

51-
158.025D2

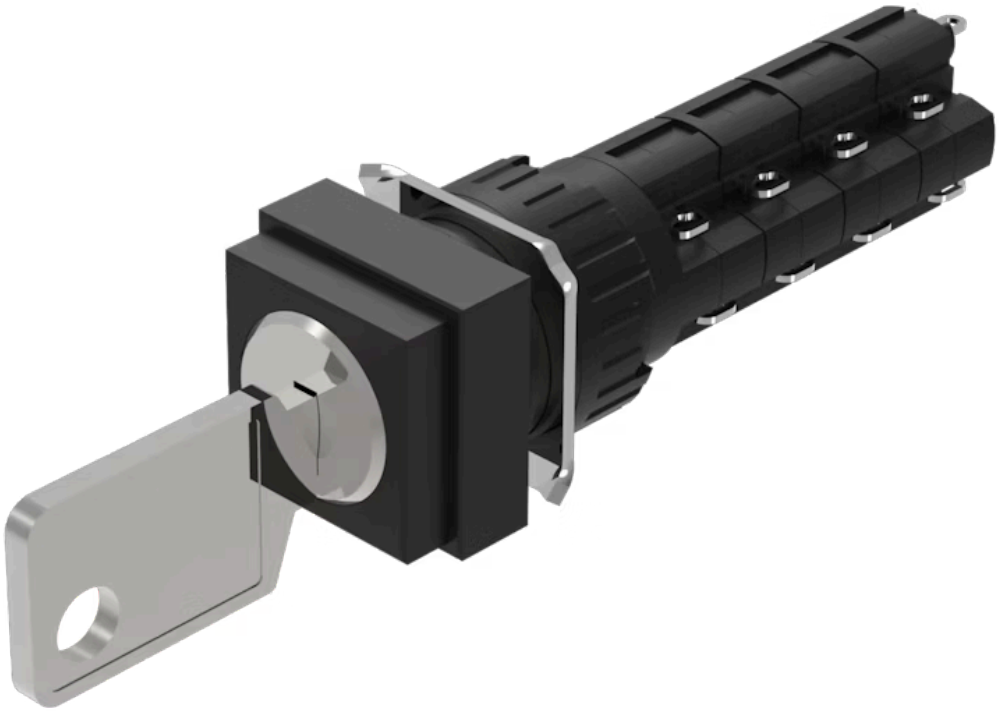

https://rs-online.eao.com/component/51-158.02...

Your product:



51-158.025D2
Actuator

FRONT

Front dimension:	18 mm x 18 mm
Front form:	Square

MOUNTING

Design:	Raised
Mounting type:	Panel mounting

ELECTRICAL CHARACTERISTICS

Switching voltage and switching current:	250 VAC, 5 A (ohmic) 250 VAC, 3 A (Soldering terminal) 250 VAC, 2 A (inductive, cos(phi) = 0.7) 125 VAC, 3 A (inductive, cos(phi) = 0.7) 220 VDC, 0.1 A (inductive, L:R = 30 ms) 110 VDC, 0.2 A (inductive, L:R = 30 ms) 60 VDC, 0.7 A (inductive, L:R = 30 ms) 24 VDC, 2 A (inductive, L:R = 30 ms)
Contacts:	4 NC / 4 NO
Rated Operational Voltage Ue:	250 VAC/DC according to EN IEC 60947-1
Switching rating:	250 V @ 5 A
Electrical lifetime:	50 000 cycles of operation
Electric strength:	2500 VAC, 50 Hz, 1 min. between all terminals and earth, according to IEC 61058-1, part 15
Protection class:	II
Standards:	According to EN/IEC 61058-1
Thermal current Ith:	5 A, according to EN / IEC 60947-5-1 The maximum current in continuous operation and at ambient temperature not exceeding the quoted maximum values.

MECHANICAL CHARACTERISTICS

Terminal:	Soldering terminal
Contact material:	Gold
Switching action:	Rest (a) - Maintained (a)
Switching system:	Snap-action switching element
Switching system:	Self-cleaning, double-break snap action switching system, 1 normally closed and 1 normally open contact per element.
Switching positions:	2 positions
Switching angle:	90° right
Mechanical lifetime:	50 000 cycles of operation
Operating force:	1,8 ... 6 N, depending on the number of switching elements
Tightening torque:	Fixing nut max. 0.5 Nm
Wire cross section:	Snap-action switching element with tinned soldering terminals at the sides Max. wire diameter 2 wires à 1.2 mm Max. wire cross-section of stranded cable 1 x 1 mm^2
Weight:	0.021 kg

AMBIENT CONDITION

IP front protection:	IP65, according to DIN EN 60529
Operating temperature:	– 25 °C ... + 55 °C
Storage temperature:	– 40 °C ... + 85 °C
Shock resistance:	15 g for 11 ms, as per DIN / EN 60512-4-3, DIN / EN 60068-2-27 (Single impacts, semi-sinusoidal)
Vibration resistance:	10 g at 10 Hz...1500 Hz, amplitude 0.75 mm (Sinusoidal), according to DIN EN 60512-4-4, DIN EN 60068-2-6
Climate resistance:	Standard condition, as per DIN EN 60068-2-30 Changing condition, as per DIN EN 60068-2-14

CERTIFICATE

Approbations:	CB (IEC 61058-1), CQC, CSA, DNV, ENEC (EN 61058-1), UL
Conformities:	CE, UKCA, 2011 / 65 / EC (RoHS), 2014 / 30 / EU (EMC), 2014 / 35 / EU (LVD)
REACH:	REACH compliant
RoHS:	RoHS compliant

OTHER

Short Description:	Actuator, 18 mm x 18 mm, Square, 4 NC / 4 NO, Rest (a) - Maintained (a), Soldering terminal, IP65, according to DIN EN 60529
Housing colour:	Black
Hints:	Standard lock: DOM 311
max. number of switching elements:	4

Switching positions:

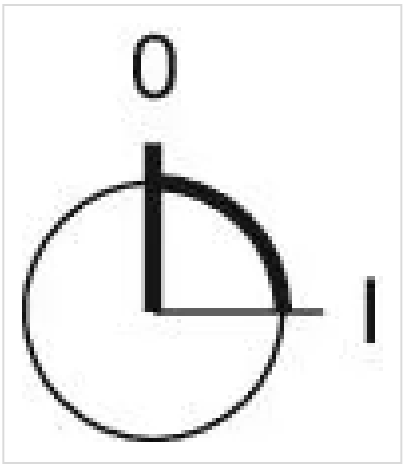

Wiring diagrams:

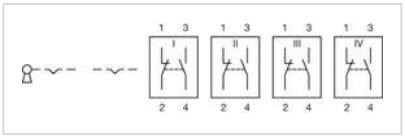

Mounting cut-outs:

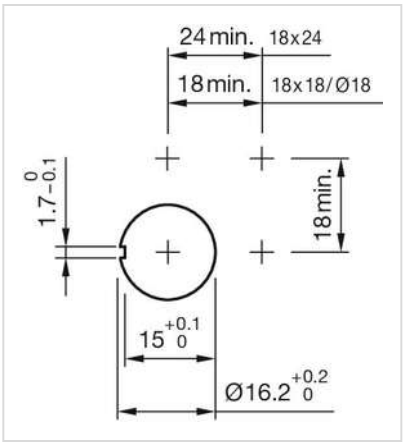

Dimension drawings:

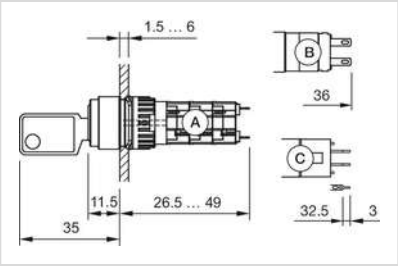

A = Solder terminal
B = Plug-in terminal 2.8 mm x 0.5 mm
C = Universal terminal 2.0 mm x 0.5 mm