

Model Number

NBB20-U1-UU

Features

- **Sensor head bidirectional and rotatable**
- **NO/NC selectable**
- **Comfort series**
- **20 mm flush**

Accessories

MHW 01
Modular mounting bracket

Technical Data

General specifications		
Switching function		Normally open/closed (NO/NC)
Output type		Two-wire
Rated operating distance	s_n	20 mm
Installation		flush
Output polarity		AC/DC
Assured operating distance	s_a	0 ... 16.2 mm
Actual operating distance	s_r	18 ... 22 mm
Reduction factor r_{Al}		0.4
Reduction factor r_{Cu}		0.3
Reduction factor r_{304}		0.77
Reduction factor r_{Fe}		1
Reduction factor r_{Brass}		0.43
Output type		2-wire
Nominal ratings		
Switching frequency	f	AC, 0 ... 30 Hz DC, 0 ... 100 Hz
Hysteresis	H	1 ... 10 typ. 5 %
Reverse polarity protection		reverse polarity tolerant
Short-circuit protection		pulsing
Voltage drop	U_d	≤ 5 V (typ. 2V) DC operation ≤ 8 V (typ. 3 V) AC operation
Momentary current (20 ms, 0.1 Hz)		0 ... 3000 mA
Design data		
Operating current	I_L	5 ... 500 mA
Off-state current	I_r	≤ 1.5 mA
Time delay before availability	t_v	≤ 300 ms
Operating voltage indicator		LED, green
Switching state indicator		LED, yellow
Error indicator		flashes when overcurrent
Functional safety related parameters		
$MTTF_d$		540 a
Mission Time (T_M)		20 a
Diagnostic Coverage (DC)		0 %
Electrical specifications		
Rated operating voltage	U_e	24 ... 250 V DC / 24 ... 230 V AC
Operating voltage	U_B	20 ... 300 V DC / 20 ... 253 V AC
Ambient conditions		
Ambient temperature		-25 ... 85 °C (-13 ... 185 °F)
Storage temperature		-25 ... 85 °C (-13 ... 185 °F)
Mechanical specifications		
Connection type		terminal compartment
Information for connection		A maximum of two conductors with the same core cross section may be mounted on one terminal connection! tightening torque 1.2 Nm + 10 %
Core cross-section		up to 2.5 mm^2
Minimum core cross-section		without wire end ferrule 0.5 mm^2 , with connector sleeves 0.34 mm^2
Maximum core cross-section		without wire end ferrule 2.5 mm^2 , with connector sleeves 1.5 mm^2
Housing material		PA 6.6 / metal
Sensing face		PA 6.6
Housing base		plastic
Degree of protection		IP67
Compliance with standards and directives		
Standard conformity		
Standards		EN 60947-5-2:2007 EN 60947-5-2/A1:2012 IEC 60947-5-2:2007 IEC 60947-5-2 AMD 1:2012
Approvals and certificates		
Protection class		II
Rated insulation voltage	U_i	230 V
Rated impulse withstand voltage	U_{imp}	2.5 kV
UL approval		cULus Listed, General Purpose "For use in NFPA 79 Applications only" For overcurrent protection, install a fuse with a rated current of max. 3 A and at least 300 V AC/DC
CCC approval		Ue 75VDC - 250VDC Ue 75VAC - 230VAC

Release date: 2017-11-02 09:41 Date of issue: 2017-11-02 238884_eng.xml

Dimensions

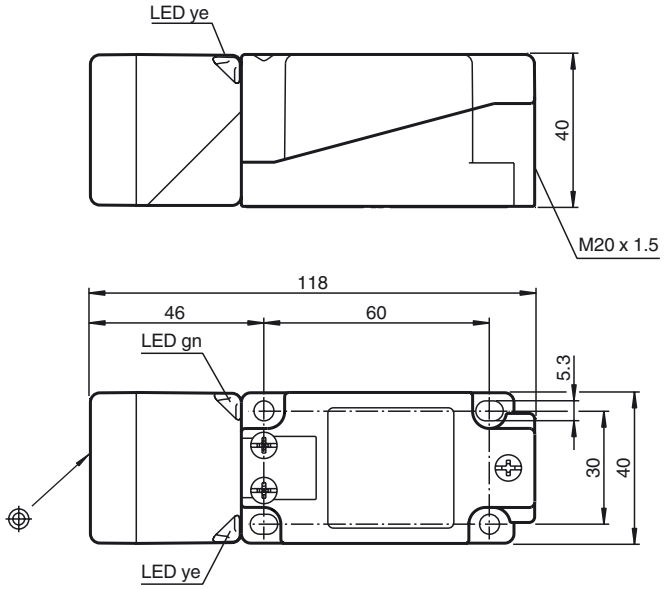

Electrical Connection

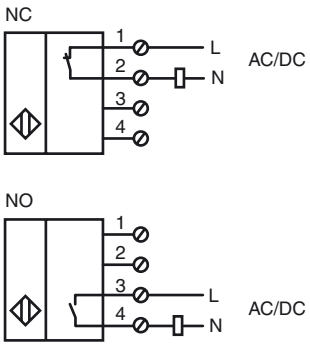

Note

The sensor is designed for individual operation. A series or parallel connection of sensors is not permissible.

Release date: 2017-11-02 09:41 Date of issue: 2017-11-02 238884_eng.xml

Refer to “General Notes Relating to Pepperl+Fuchs Product Information”.
Pepperl+Fuchs Group www.pepperl-fuchs.com
USA: +1 330 486 0001 fa-info@us.pepperl-fuchs.com
Germany: +49 621 776 4411 fa-info@de.pepperl-fuchs.com
Singapore: +65 6779 9091 fa-info@sg.pepperl-fuchs.com
PEPPERL+FUCHS SENSING YOUR NEEDS