THE INFORMATION CONTAINED IN THIS DRAWING IS THE SOLE PROPERTY OF L-COM, INC. ANY REPRODUCTION IN PART OR WHOLE WITHOUT THE WRITTEN PERMISSION OF L-COM, INC. IS PROHIBITED.

REVISIONS			
REV	DESCRIPTION	DATE	APPROVED
E	ECN 8310: ADDED INDIVIDUALLY PACKAGED NOTE, NEW FORMAT	4/8/16	D.FRISIELLO
F	ECN 8848: REVISED COMPONENTS PER VENDOR, STRIPPING DIMS.	7/11/17	D.FRISIELLO

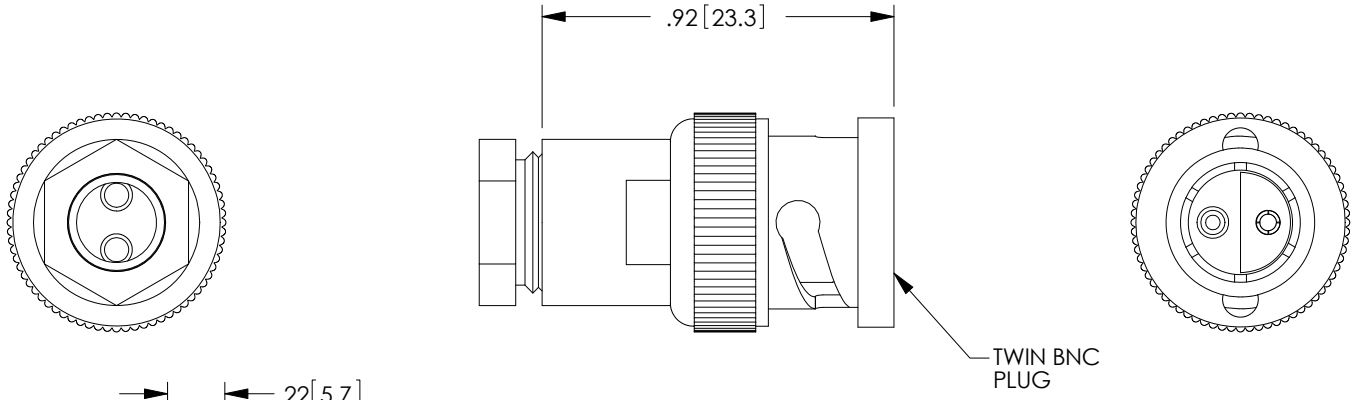

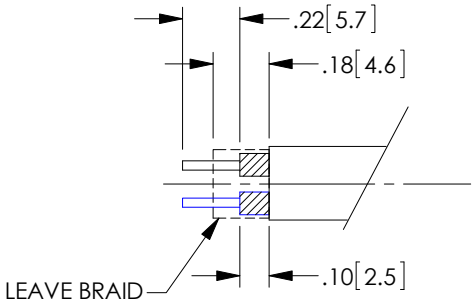

RECOMMENDED STRIP DIMENSIONS * LEAVE BRAID*

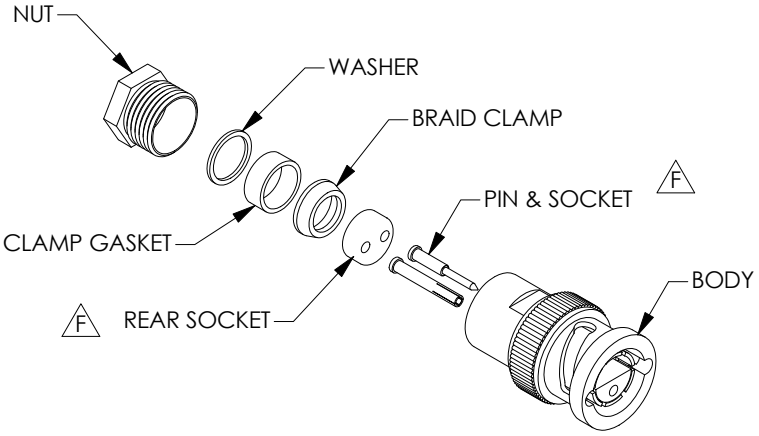

NOTES:

MATERIAL:
BODY: BRASS
DIELECTRIC: PTFE
CENTER PINS: PHOSPHOR BRONZE
BRAID CLAMP: BRASS
WASHER: BRASS
NUT: BRASS

FINISH:
BODY: NICKEL PLATE
CENTER PINS: GOLD PLATE
BRAID CLAMP: NICKEL PLATE
WASHER: NICKEL PLATE
NUT: NICKEL PLATE

COMPONENT SHALL BE INDIVIDUALLY PACKAGED IN ACCORDANCE WITH L-COM SPECIFICATION PS-0031.

REGULATORY COMPLIANCE:
CE2011/65/EU(RoHS DIRECTIVE)

UNLESS OTHERWISE SPECIFIED,
DIMENSIONS ARE IN INCHES [mm]
OVERALL CABLE LENGTH TOLERANCE:
≤12 [305] = +1 [25] / -0
>12 [305] ≤60 [1524] = +2 [51] / -0
>60 [1524] ≤120 [3048] = +4 [102] / -0
>120 [3048] ≤300 [7620] = +6 [152] / -0
>300 [7620] = +5% / -0%
ALL OTHER DIMENSIONAL TOLERANCES:
.X = ± .2 [5.08]
.XX = ± .02 [.51]
.XXX = ±.005 [.13]

PROJECTION

APPROVALS	DATE
DRAWN BY MCCORMICK	08/23/01
CHECKED BY ENG	08/23/01
APPROVED BY R.CARRICK	08/30/01

CONFIGURATION DETAILS OF UNDIMENSIONED FEATURES MAY VARY

COLOR VARIATIONS MAY OCCUR

REF

L-COM Global Connectivity
50 HIGH STREET
NORTH ANDOVER, MA
01845

CATEGORY
COAXIAL

PRODUCT DESCRIPTION
CONN TWIN BNC M TWINAXIAL CA

SIZE	FSCM NO.	DWG. NO.	REV.
A	43321	BAC928	F

SCALE: NONE | CAD FILE: BAC928.SLDDRW | SHEET 1 OF 1