Precision pressure regulator, Series PR1-RGP

0821302173

General series information
AVENTICS Series PR1 Precision pressure regulators

- The AVENTICS Series PR1/PR2 is designed for applications that demand fast responses to the slightest fluctuation in compressed air. They can be adjusted precisely and are an alternative to electronic pressure regulators. Precision pressure regulators are used to achieve extremely accurate pressure control independent from the pilot pressure and the flow rate. They offer high performance and flexibility, combined with increased reliability.



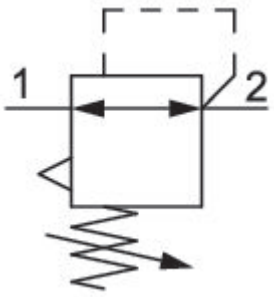

Technical data

Industry	Industrial
Function	Precision pressure regulator
Parts	Precision pressure regulator
Mounting orientation	Any
Regulator type	Diaphragm-type pressure regulator
Port	G 1/2
Nominal flow Qn	6500 l/min
Regulation range min.	0.05 bar
Regulation range max.	7 bar
Working pressure min.	0.5 bar

Working pressure max	16 bar
Min. ambient temperature	-35 °C
Max. ambient temperature	60 °C
Activation	Mechanical
Regulator function	with relieving air exhaust
Certificates	Suitable for ATEX
Pressure supply	single
Internal air consumption q_v max.	6 l/min
Medium	Compressed air Neutral gases
Recommended pre-filtering	5 µm
Weight	1.5 kg

Material

Housing material	Die cast zinc
Seal material	Chloroprene rubber
Part No.	0821302173

Technical information

The pressure dew point must be at least 15 °C less than ambient and medium temperature and may not exceed 3 °C.

Relieving exhaust (≤ 10 mbar over set pressure)

Mounting: mounting bracket R412004872 or installation in piping

Notice: This product may only be operated with oil-free, dry compressed air.

Internal air consumption depending on adjustment range

Suitable for use in Ex zones 1, 2, 21, 22.

Nominal flow Qn with secondary pressure p2 = 6 bar at Δp = 1 bar

Dimensions

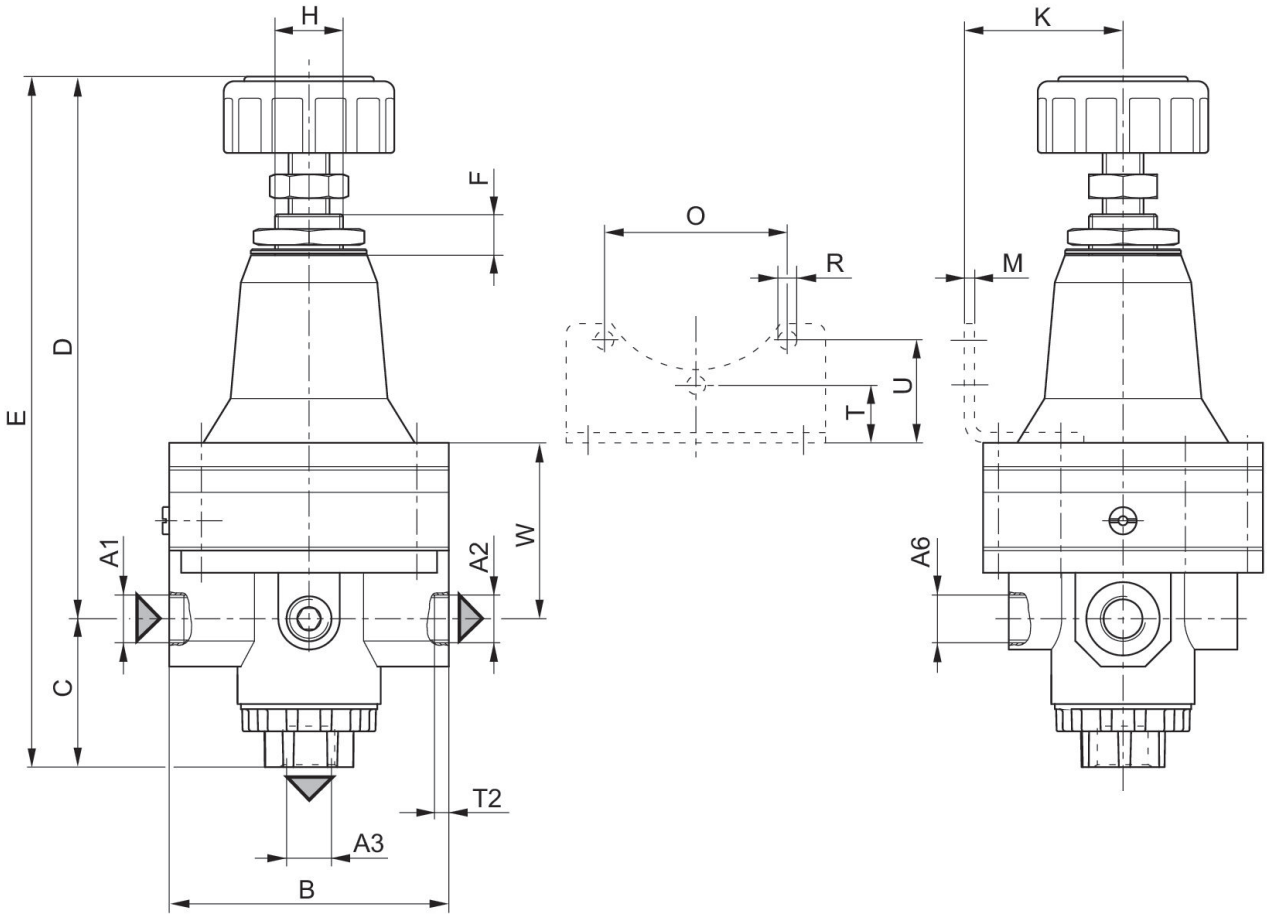

A1 = input
A2 = output
A3 = output
A6 = output

Dimensions in mm

Part No.	A1	A2	A3	A6	B	C	D	E	F
0821302173	G 1/2	G 1/2	G 3/8	G 1/4	82	43.5	159	202.5	10

Part No.	H	K	M	O	R	T	T2	U	W
0821302173	M20x1,5	47	3	54	4	17	16	30	51.6

Hysteresis

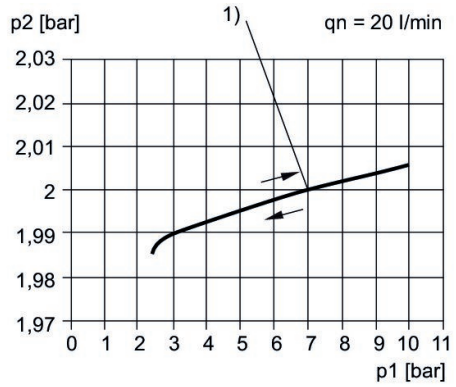

p1 = Working pressure
p2 = Secondary pressure
q = flow rate
1) * starting point

Flow rate characteristic

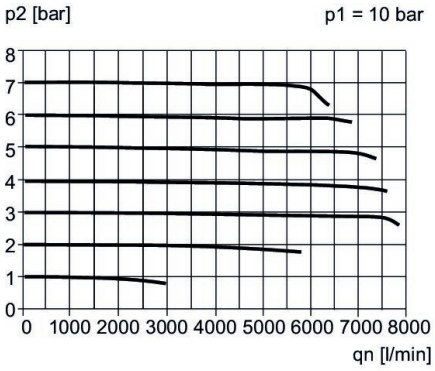

p1 = Working pressure
p2 = Secondary pressure
qn = Nominal flow

exhaust characteristics (contact limit < 10 mbar)

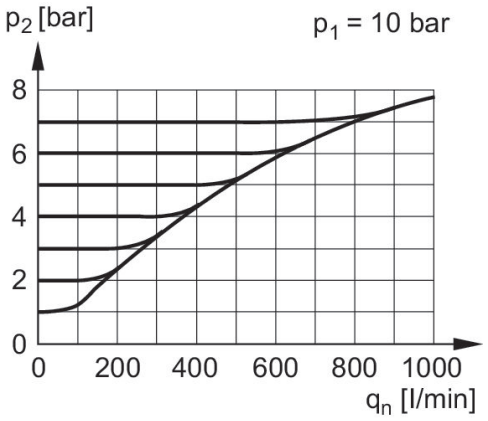

p1 = Working pressure
p2 = Secondary pressure
qn = Nominal flow