THE INFORMATION CONTAINED IN THIS DRAWING IS THE SOLE PROPERTY OF L-COM, INC. ANY REPRODUCTION IN PART OR WHOLE WITHOUT THE WRITTEN PERMISSION OF L-COM, INC. IS PROHIBITED.

REVISIONS

REV	DESCRIPTION	DATE	APPROVED
A	INITIAL CHECK IN	01/30/04	MCCORMICK
B	ECN# 2731 - ADDED ROHS STAMP	10/23/07	D.GRIFFIN
C	ECN 3957: CHANGE MATL HOUSING FROM NYLON TO ABS, NEW FORMAT	4/22/09	D.FRISIELLO
D	ECN 4278: ADDED OPERATING TEMPERATURE RANGE AND PACKAGING	10/1/09	D.FRISIELLO

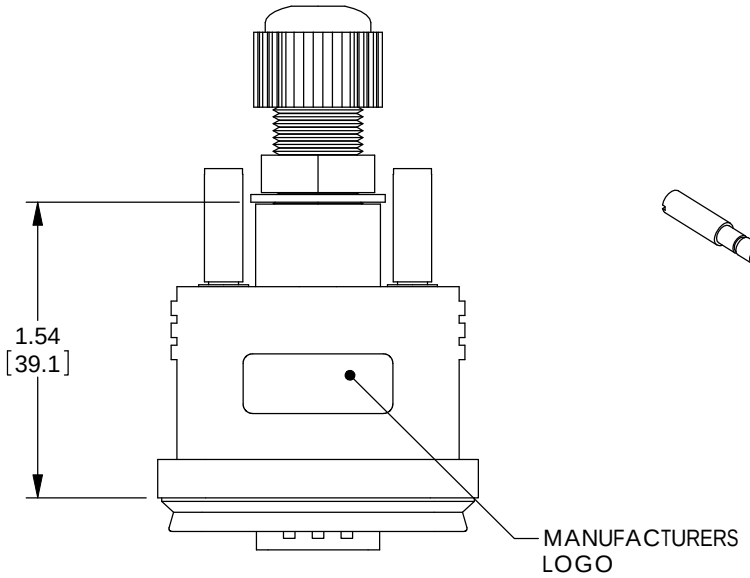

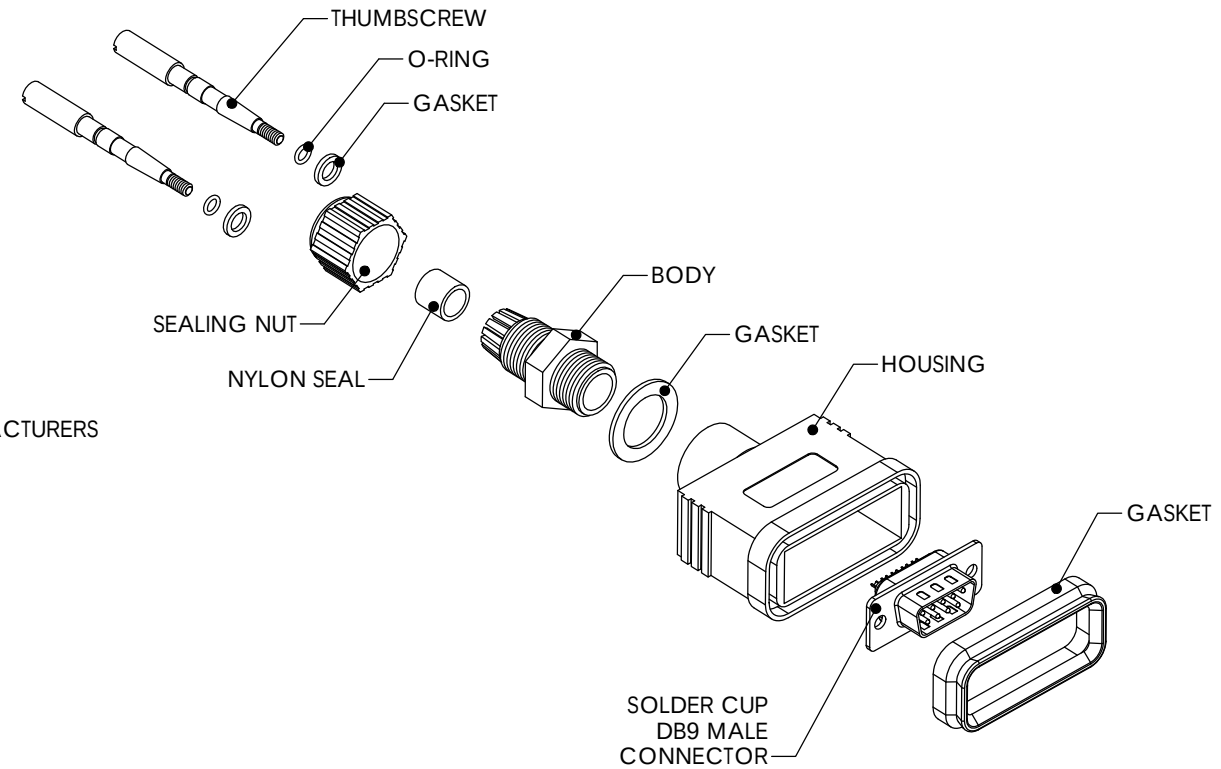

NOTES:
1. RECOMMENDED CABLE DIAMETER: .138 ∅ THRU .276 ∅
2. IP (INGRESS PROTECTION) RATING: 67.
3. OPERATING TEMPERATURE RANGE: -40˚C TO +105˚C.
4. COMPONENT ASSEMBLY SHALL BE INDIVIDUALLY PACKAGED IN ACCORDANCE WITH L-COM SPECIFICATION PS-0031.

MATERIAL:
GASKETS: EPDM
BODY: NYLON
HOUSING: ABS
O-RING: SILICONE
SEAL: EPDM
SEALING NUT: NYLON
THUMBSCREW: BRASS

FINISH:
THUMBSCREW: NICKEL PLATE

RoHS Compliant ✔

UNLESS OTHERWISE SPECIFIED, DIMENSIONS ARE IN INCHES [mm]	APPROVALS	DATE
DIMENSIONAL TOLERANCES: .X = ±.1 .XX = ±.02 .XXX = ±.005	DRAWN BY C.MCCORMICK	01/28/2004
ANGULAR TOLERANCES: ALL = ± 1°	CHECKED BY D.PARHAM	01/28/2004
PROJECTION	APPROVED BY R.CARRICK	01/28/2004
	CONFIGURATION DETAILS OF UNDIMENSIONED FEATURES MAY VARY	
	COLOR VARIATIONS MAY OCCUR	
	REF	

L-COM Global Connectivity
45 BEECHWOOD DRIVE
NORTH ANDOVER, MA
01845

CATEGORY: DATA CABLING

PRODUCT DESCRIPTION: DB9 MALE WATERPROOF CONNECTOR

SIZE	FSCM NO.	DWG. NO.	REV.
A	43321	WPDB9P-KIT	D

SCALE: NONE | CAD FILE: WPDB9P-KIT.SLDDRW | SHEET 1 OF 1