SCHAEFFLER



FAG

# UCFC208-J7

Flanged housing unit

Schaeffler ID:
0822285230000

Flanged housing unit UCFC

## Technical information

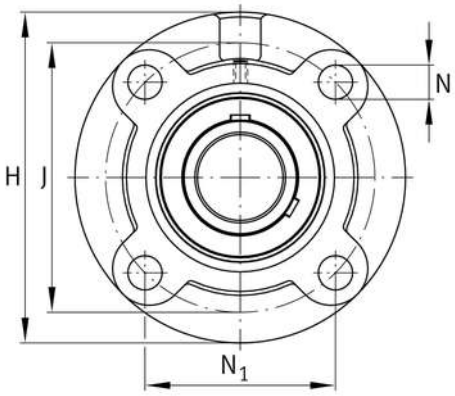


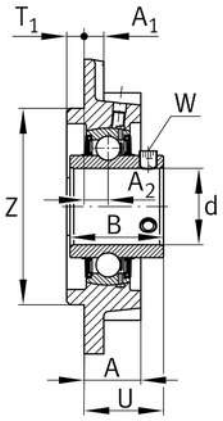


### Main Dimensions & Performance Data

| | | |
|---|---|---|
| d | 40 mm | Bore diameter |
| H | 145 mm | Height flange |
| U | 41,2 mm | Total height unit |
| $C_r$ | 32.500 N | Basic dynamic load rating, radial |
| $C_{0r}$ | 19.800 N | Basic static load rating, radial |
| $C_{ur}$ | 1.030 N | Fatigue load limit, radial |
| | 2,079 kg | Weight |

### Mounting dimensions

| | | |
|---|---|---|
| J | 120 mm | Distance fixing bore |
| J | 120 mm | Pitch circle diameter (holes) |
| N | 14 mm | Fixing bore |
| $N_1$ | 84,8 mm | Distance fixing bore |
| $T_1$ | 10 mm | Height spigot |
| Z | 100 mm | Diameter spigot |
| | h8 | Diameter spigot clearance |
| n | 4 | Number of screwing holes |

### Dimensions

| | | |
|---|---|---|
| $A_1$ | 9 mm | Thickness of flange |
| $A_2$ | 11 mm | Distance raceway |
| B | 49,2 mm | Width |
| Q | M6 | Connection thread lubrication |

### Additional information

| | | |
|---|---|---|
| | UC208 | Bearing designation |

The datasheet is only an overview of dimensions and basic load ratings of the selected product. Please always observe all further information and guidelines for this product. For further information you can use the contact form on our website.