209555
BE-R30-G5-K-BS-DIF
Ringlight

- High light intensity thanks to state-of-the art high power LEDs
- Very compact design
- Long life thanks to intelligent thermal management
- Homogeneous illumination
- Protection class IP 67
- Robust metal housing



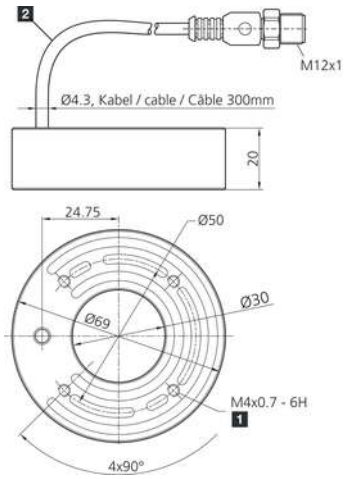

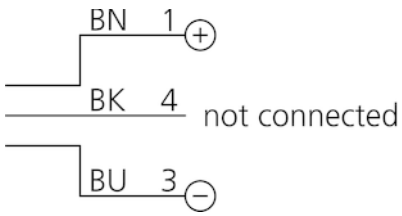

1) 6 mm deep 2) Connection cable BK: black BN: brown BU: blue

Function

Technical data (typ.)	+20°C, 24 V DC
Service voltage	24 V DC (Supply Class 2)
Power	4.6 W (24 V DC)
Insulation voltage endurance	500 V
Diameter	Ø 30 / Ø 69 mm (Diameter)
Height	20 mm
Housing material	Aluminum (Black, Anodized)
Material	■ Polyurethane (Cable) ■ PMMA, diffuse (Protection optics)
Protection class	III, operation on protective low voltage
Risk group (DIN EN 62471)	Free group
Approvals	UL
Design	Ringlight
Characteristics	State-of-the-art high power LEDs
Light source	LED
Color	White (diffuse)
Wavelength	6000 K
Deflection angle FWHM	80°
Light intensity	■ 10.9 kLx (100.0 mm) ■ 3.50 kLx (200.0 mm) ■ 1.60 kLx (300.0 mm)
Shock/vibration load	30 g, 11 ms / 10 … 55 Hz, 1.0 mm

209555
BE-R30-G5-K-BS-DIF
Ringlight

Technical data (typ.)	+20°C, 24 V DC
Ambient temperature during operation	0 … +40 °C
Protection type	IP 67
Connection	Pigtail, 0.3 m, M12, 3-pin
Connection cable	VK …

More information / accessories	https://www.di-soric.com/209555

© di-soric . Right to change reserved