Data Plug Crimp Tool Kit

Stock No.	Product
443-895	Tool Frame
443-902	Tool Frame and Case
443-918	Tool Kit

Figure 1.

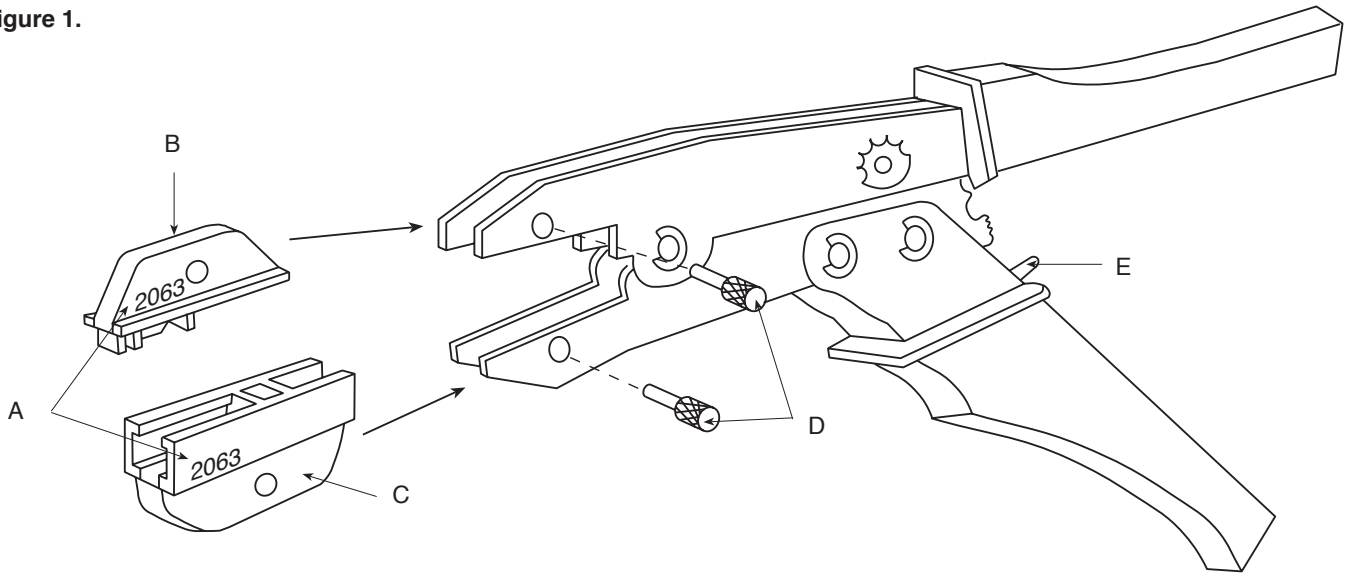

A. Die set no. (example)
B. Top die
C. Bottom die
D. Die set screws
E. Ratchet release lever

Die set selection

Each die set is clearly marked with a number which identifies it for terminating specific data plugs. The table below gives the cross reference between die sets and plugs.

Table 1

Die set no.	RS stock no.	Terminates plugs	Plug stock no.
2061	443-974	Stewart 8/8-way	477-321, 437-216
2062	443-946	Stewart 6/4 and 6/6-way	442-707, 477-315 437-193
2063	443-924	4/4-way	436-910, 477-309
2064	443-968	Amp 8/8-way	455-258, 436-954
2065	443-930	Amp 6/4 and 6/6-way	436-926, 436-932
2067	443-952	Amp 6/6 MMJ	436-948
2068	443-980	10/10-way	436-960, 437-222

Figure 2. Plug termination

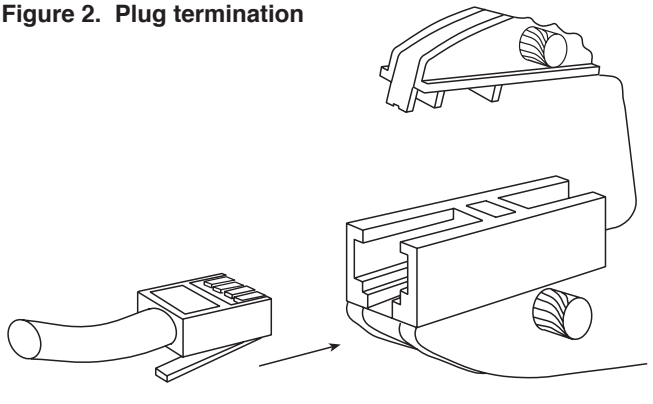

Plug termination

Selecting the appropriate die set as in table 1, insert the die set into the tool frame, aligning the die set holes with the holes in the tool jaws (figure 1). Secure the die set with the set screws as shown.

Squeeze the tool handles to ensure correct opening and closing of the die set.

With cable prepared and assembled to the appropriate plug, insert the plug into the bottom die (figure 2). Squeeze the tool handles to terminate the plug. Allow the ratchet mechanism to fully cycle and remove the plug when the tool jaws open.