# E70587

## AS-Interface flat cable insulation displacement connector

FC Splitter AS-i / AUX M12 UL

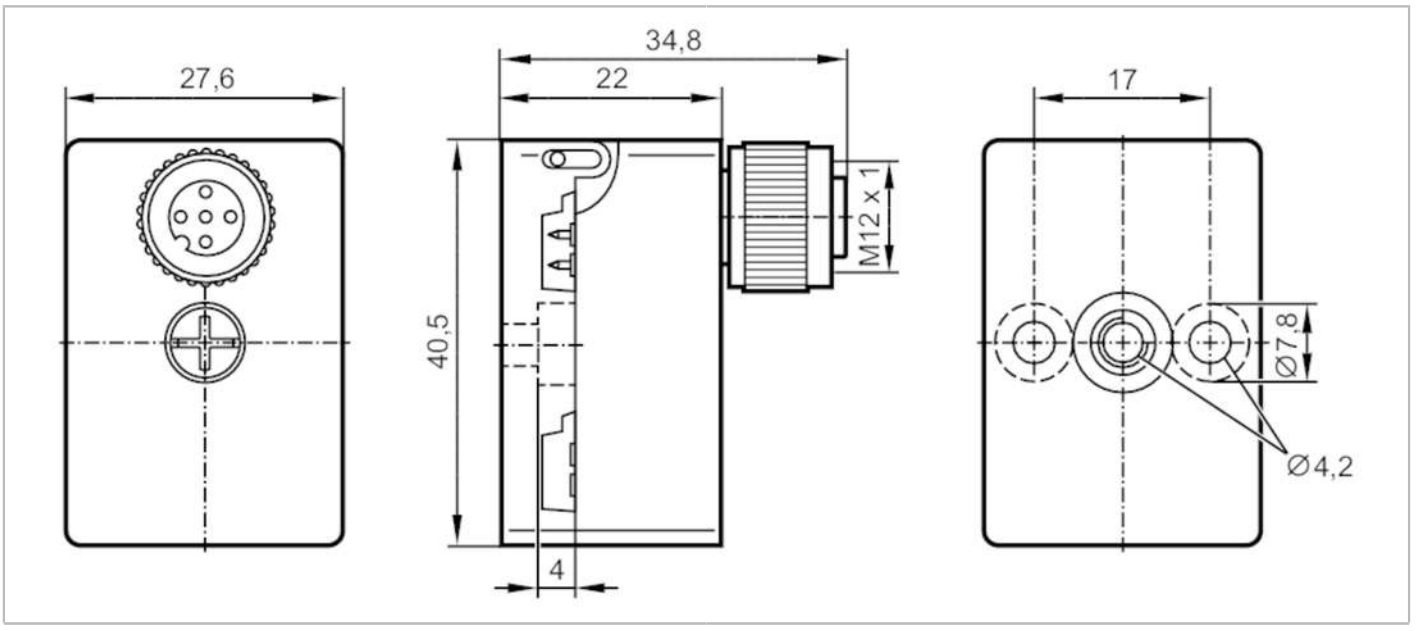


| | | |
|---|---|---|
| **Electrical data** | | |
| Protection class | | III |
| Max. current load per module/slot | [A] | 4 |
| **Outputs** | | |
| Electrical design | | AS-i |
| **Operating conditions** | | |
| Ambient temperature | [°C] | -25...75 |
| Protection | | IP 67 |
| **Mechanical data** | | |
| Weight | [g] | 60.5 |
| Materials | | housing: PBT / PC; screw: stainless steel (303/1.4305) |
| Tightening torque | [Nm] | < 1.65 |
| **Accessories** | | |
| Accessories (optional) | | flat cable end seal:, E70413 |
| | | heat-shrink cap:, E70113 |
| **Remarks** | | |
| Remarks | | The flat cable should not end in the splitter. |
| | | Use a flat cable seal or heat-shrink cap for sealing. |
| Pack quantity | | 1 pcs. |

# E70587

## AS-Interface flat cable insulation displacement connector

**FC Splitter AS-i / AUX M12 UL**

## Electrical connection

Connector:  M12; coding: A; Moulded body: PUR

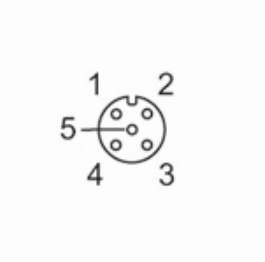


### Connection

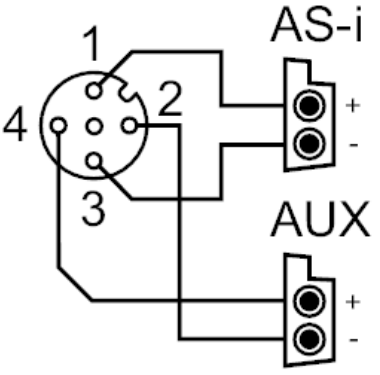


| | |
|---|---|
| 1 | AS-i + |
| 2 | AUX - |
| 3 | AS-i - |
| 4 | AUX + |