Type: LESW/2

Switch Initiated Delay Off (Delay On Release), Multi-voltage Timer

Terminal Protection to IP20



Dims: to DIN 43880
W. 17.5mm

- ***NEW*** **17.5mm DIN rail housing**
- **Switch Initiated Delay Off (Delay On Release) re-triggerable timing function**
- **7 Selectable time ranges (0.1 seconds – 100 hours)**
- **Fine adjustment of selected time range**
- **Multi-voltage input (12 – 230V AC/DC)**
- **External trigger input can be from Voltage Free Contact or Solid State**
- **Timer will still function with load connected to trigger (B1) input**
- **1 x DPDT relay output 8A**
- **Green LED indication for supply / timing status**
- **Red LED indication for relay status**
- **Conforms to IEC 61812**

Wiring Information *and* ***Product Demonstration***
Videos can also be found on our YouTube channel
https://www.youtube.com/user/BroyceControlLtd



Citation ISO Certification
Quality management ISO 9001: 2015
REGISTERED
Certificate No 156532009

FUNCTION DIAGRAM

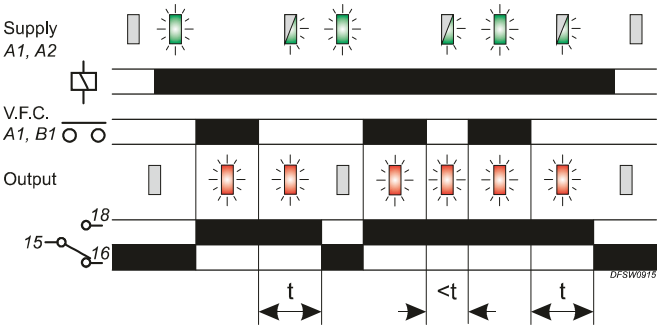

LED operation:



INSTALLATION AND SETTING

Installation work must be carried out by qualified personnel.

- BEFORE INSTALLATION, ISOLATE THE SUPPLY.
- Connect the unit as required.

Setting the unit.

- Set the "Range" ❹ to the required position (depending on whether seconds, minutes or hours are required).
- Set the "Set %" adjustment ❸ as required. The "Set %" is a % of the selected range; so for example, a 30% setting on the 1 – 10 hour range will give 3 hours.

Applying power.

- Apply power across terminals **A1** and **A2** and the green LED ❶ will illuminate.
- The relay will remain de-energised (contacts **15** / **18** and **25** / **28** open, **15** / **16** and **25** / **26** closed) and red LED ❷ extinguished.
- Close the contact across **A1** and **B1** and the relay will energise (contacts **15** / **18** and **25** / **28** closed, **15** / **16** and **25** / **26** open) and red LED illuminate.
- When the contact across **A1** and **B1** opens, the delay period "t" will begin and the green LED will flash to indicate timing is now in progress.
- After the delay period "t" has elapsed, the relay will de-energise (contacts **15** / **18** and **25** / **28** open, **15** / **16** and **25** / **26** closed) and the red LED will extinguish.
- The green LED will now remain permanently lit.
- The whole timing process is repeated by removing and re-applying power.
- If during the time period "t", the contact across **A1** and **B1** closes, timing will stop and restart over again the next time the contact opens.

Note:

[1] In accordance with IEC 61812, the green LED is permitted to extinguish during a voltage dip or momentary interruption of the power supply providing the state of the output relay does not change. The dip / interruption duration and levels are defined in the product standard.

TECHNICAL SPECIFICATION

Supply voltage U **(A1, A2)**:	12 – 230V AC/DC			
Frequency range:	48 - 63Hz (AC supplies)			
Supply variation:	+/- 15%			
Overvoltage category:	III (IEC 60664)			
Rated impulse withstand voltage:	4kV (1.2/50µS) IEC 60664			
Power consumption (max.):	12V	24V	110V	230V
AC:	0.3VA	0.4VA	1.3VA	3.4VA
DC:	0.26W	0.24W	0.47W	0.95W
Timing function:	Switch Initiated Delay Off			
Timing ranges (7):	Seconds:	Minutes:	Hours:	
	0.1 – 1	0.1 – 1	0.1 – 1	
	1 – 10	1 – 10	1 – 10	
			10 - 100	
Reset time:	100mS			
Accuracy:	± 1% of maximum full scale			
Adjustment accuracy:	< 5% of maximum full scale			
Repeat accuracy:	± 0.5% at constant conditions (IEC 61812)			
Drift with temperature:	± 0.05% / °C			
Drift with voltage:	± 0.2% / V			
External trigger input **(A1 > B1)**:	Volt Free Contact, Open Collector			
External loading:	Yes, between B1 and A2 (i.e. LED, Relay, Lamp)			
Trigger threshold:	>75% of voltage present between A1 and A2 (auto-set)			
Minimum trigger time:	AC: 60mS DC: 40mS (B1 terminal unloaded)			
Maximum input frequency:	10 Hz (with 50:50 duty cycle)			
Maximum cable length:	10m (between Timer and external switching device)			
Power on indication / Timing[1]:	Green LED			
Relay status	Red LED			
Ambient temp:	-20 to +60°C			
Relative humidity:	+95%			
Output **(15, 16, 18/25, 26, 28)**:	DPDT relay			
Output rating:	AC1	250V 8A (2000VA)		
	AC15	250V 5A (no), 3A (nc)		
	DC1	25V 8A (200W)		
Electrical life:	≥ 150,000 ops at rated load			
Dielectric voltage:	2kV AC (rms) IEC 60947-1			
Rated impulse withstand voltage:	4kV (1.2/50µS) IEC 60664			
Housing:	Grey flame retardant UL94			
Weight:	≈ 60g			
Mounting option:	On to 35mm symmetric DIN rail to BS EN 60715 or direct surface mounting via 2 x M3.5 or 4BA screws using the black clips provided on the rear of the unit.			
Terminal conductor size:	≤ 2 x 2.5mm² solid or stranded			
Terminal screw:	M3 (Designed for use with **PZ1** "pozi-driver")			
Tightening torque:	0.6Nm Max.			
Approvals:	Conforms to IEC 61812.			

c UL us LISTED IND. CONT. EQ. E111187

CE, UKCA, C-tick and RoHS Compliant.
EMC: Immunity: EN 61000-6-2 (EN 61000-4-3 10V/m 80MHz - 2.7GHz)
Emissions: EN 61000-6-4

CONNECTION DIAGRAM

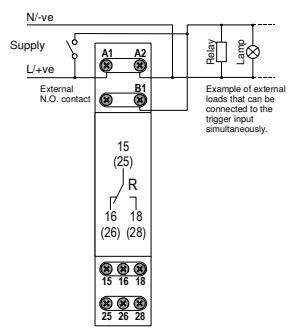

SETTING DETAILS

1. Power supply status / Timing (Green) LED
2. Relay output status (Red) LED
3. "Set %" adjustment
4. Time delay "Range" selector

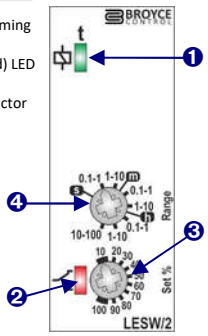

DIMENSIONS

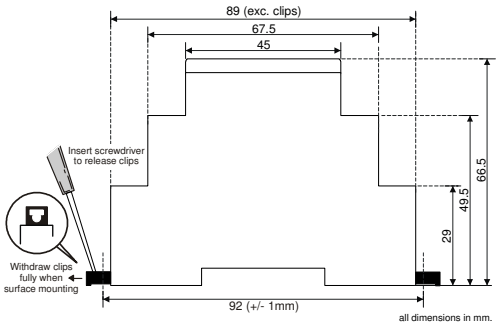

HS Code: 85364900
Country of Origin: UK

Broyce Control Ltd., Pool Street, Wolverhampton, West Midlands WV2 4HN. England
Tel: +44 (0) 1902 773746 Email: sales@broycecontrol.com Web: www.broycecontrol.com

The Information provided in this literature is believed to be accurate (subject to change without prior notice); however, use of such information shall be entirely at the user's own risk.