

Image may differ from product. See technical specification for details.

SHT 32

SH bushing

SH bushings are designed for heavy loads - for both torque and axial forces. SHR bushings, delivered with a non-slotted outer sleeve, are for use when welding components onto the bushing, e.g. a lever. SHT bushings, delivered with a slotted outer sleeve, lock the application by pressure and friction. SH bushings are entirely mechanical and have no

temperature-sensitive hydraulic parts, so they can be used anywhere - even in extreme cold or heat.

- Manufactured according to established market standards
- Corrosion-resistant
- Withstand extreme heat or cold
- Available in a wide range of metric and imperial bore sizes
- Easily installed and removed using basic tools

Overview

Dimensions

Bore diameter	32 mm
Outside diameter	60 mm
Width, total	49 mm

Properties

Design	slotted

Logistics

Product net weight	0.849 kg
eClass code	23-05-19-01
UNSPSC code	31171605

Technical specification

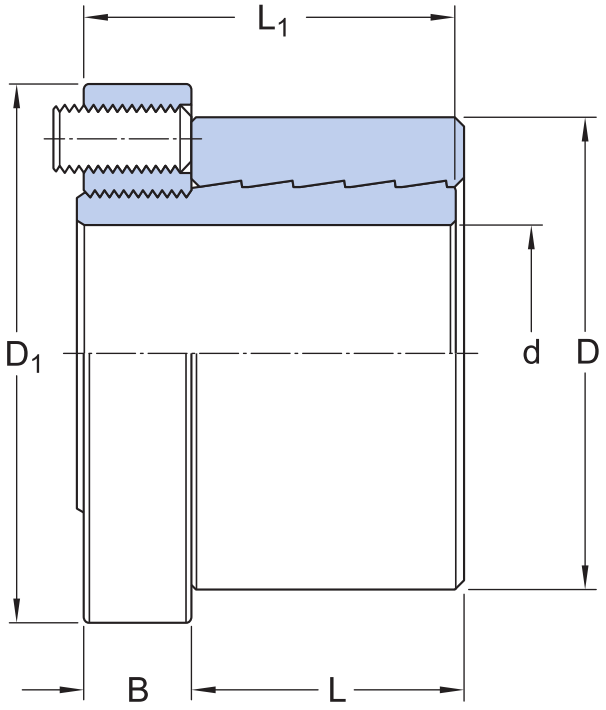

Dimensions

d	32 mm	Bore diameter
D	60 mm	Outside diameter
D_1	68 mm	Outside diameter of nut
L	37 mm	Width hub
L_1	49 mm	Assembled width
B	12.5 mm	Width of nut

Calculation data

Maximum torque	M_v	650 N·m
Maximum axial load	P_a	41 kN

Mounting information

Set screws		M8x16
Number of set screws		5
Tightening torque for set screws	M_t	18 N·m

Terms of use

By accessing and using this website / app owned and published by AB SKF (publ.) (556007-3495 · Gothenburg) (“SKF”), you agree to the following terms and conditions:

Warranty Disclaimer and Limitation of Liability

Although every care has been taken to assure the accuracy of the information on this website / app, SKF provides this information "AS IS" and DISCLAIMS ALL WARRANTIES, EXPRESS OR IMPLIED, INCLUDING, BUT NOT LIMITED TO, IMPLIED WARRANTIES OF MERCHANTABILITY AND FITNESS FOR A PARTICULAR PURPOSE. You acknowledge that your use of this website / app is at your sole risk, that you assume full responsibility for all costs associated with use of this website / app, and that SKF shall not be liable for any direct, incidental, consequential, or indirect damages of any kind arising out of your access to, or use of the information or software made available on this website / app.

Any warranties and representations in this website / app for SKF products or services that you purchase or use will be subject to the agreed upon terms and conditions in the contract for such product or service.

Further, for non-SKF websites / apps that are referenced in our website / app or where a hyperlink appears, SKF makes no warranties concerning the accuracy or reliability of the information in these websites / apps and assumes no responsibility for material created or published by third parties contained therein. In addition, SKF does not warrant that this website / app or these other linked websites / apps are free from viruses or other harmful elements.

Third Party Services

When viewing YouTube content via the SKF website(s) (i.e. using YouTube API Services), you agree to be bound by the YouTube Terms of Service.

Copyright

Copyright in this website / app copyright of the information and software made available on this website / app rest with SKF or its licensors. All rights are reserved. All licensed material will reference the licensor that has granted SKF the right to use the material. The information and software made available on this website / app may not be reproduced, duplicated, copied, transferred, distributed, stored, modified, downloaded or otherwise exploited for any commercial use without the prior written approval of SKF. However, it may be reproduced, stored and downloaded for use by individuals without prior written approval of SKF. Under no circumstances may this information or software be supplied to third parties.

This website /app includes certain images used under license from Shutterstock, Inc.

Trademarks and Patents

All trademarks, brand names, and corporate logos displayed on the website / app are the property of SKF or its licensors, and may not be used in any way without prior written approval by SKF. All licensed trademarks published on this website / app reference the licensor that has granted SKF the right to use the trademark. Access to this website / app does not grant to the user any license under any patents owned by or licensed to SKF.

Changes

SKF reserves the right to make changes or additions to this website / app at any time.