PCMC Series: PCB Mounting Cans

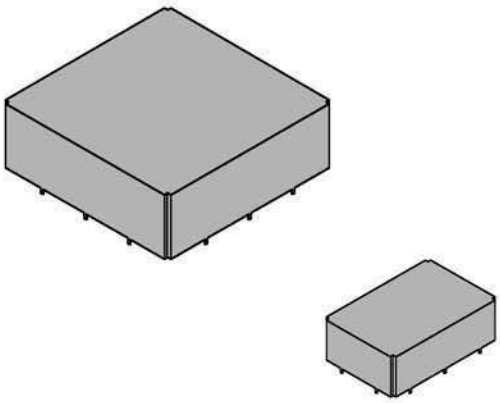

A low cost range of single piece PCB mounting cans giving good attenuation for applications where board level RFI/EMI screening is requiried, available in standard or custom options.

- **PCB Mounting Pins**
  tinplate finish for solderability
- **Locking Pins** *(optional)*
  for positive placement & retention *(see next page)*
  ideal for reflow soldering applications
- **Butt Jointed Corners**
  tinplate finish allows corners to be easily soldered for increased screening
- **Custom Sizes**
  can be manufactured without tooling charges making prototypes and low volumes viable
- **Additional Features**
  holes, cut outs, etc., can be incorporated during manufacture *(see back page)*
- **Alternative Materials**
  copper, brass, steel, nickel
- **Alternative Finishes**
  bright acid tin, nickel plate

Specification

Material/Finish:	Tinplate to BS EN 1202
Thickness:	0.54mm
Surface resistivity:	$20 \times 10^{-6} \Omega$ per square
Conductivity:	5×10^{4}S (mho)
Tolerance:	$^{+}/_{-}$ 0.25mm (general) $^{+}/_{-}$ 0.10mm (PCB pin pitch)
Pin Size:	1mm x 2.25mm

STOCK SIZES - Internal & overall dimensions (mm)

Part No.	Dim. A	Dim. B	Dim. C	Nominal overall size	Number of Pins	Pin Pitch
PCMC1	20	20	15	21 x 21 x 16	4	C/L
PCMC2	25	25	15	26 x 26 x 16	8	10.5
PCMC3	30	25	20	31 x 26 x 21	8	10.5
PCMC4	30	30	15	31 x 31 x 16	8	10.5
PCMC5	40	30	15	41 x 31 x 16	10	10.5
PCMC6	40	35	20	41 x 36 x 21	12	10.5
PCMC7	40	40	15	41 x 41 x 16	8	20
PCMC8	50	50	15	51 x 51 x 16	8	20
PCMC9	60	40	20	61 x 41 x 21	10	20
PCMC10	70	50	25	71 x 51 x 26	10	20
PCMC11	75	75	25	76 x 76 x 26	12	20
PCMC12	100	50	25	101 x 51 x 26	12	20

NOTE: A4 dimensioned drawings for each part are available on request.

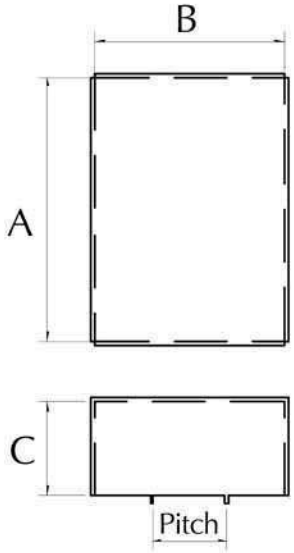

PERANCEA LTD

Telephone: 020-8365 2520
Fax: 020-8365 3727
Email: sales@perancea.com
Website: www.perancea.com

In line with our policy of continuous improvement we reserve the right to make design or product alterations without prior notice.