# AERASGARD® KLQ-CO2-W
# AERASGARD® KFTM-(LQ)-CO2-W / KTM-CO2-SD

**Multifunctional duct sensors and measuring transducers incl. mounting flange, for humidity, temperature, CO2 content and air quality (VOC), calibratable, with active/switching output**

S+S REGELTECHNIK

**Patented quality product (patent no. DE 10 2014 010 719.1)**

Maintenance-free duct sensor **AER**ASGARD® **KTM-CO2-SD** with active output, automatic calibration, in an impact-resistant plastic housing with quick-locking screws, for determining the CO2 content of the air (0...2000 ppm/0...5000 ppm) and the temperature (–35...+80 °C). The measuring transducer converts the measured values into a standard signal of 0-10 V.

Maintenance-free duct sensor **AER**ASGARD® **KFTM-LQ-CO2-W** with active/switching output, automatic calibration, in an impact-resistant plastic housing with quick-locking screws, optionally with/without Display, for determining the CO2 content of the air (0...2000 ppm/0...5000 ppm), the quality (0...100 % VOC), the temperature (–35...+80 °C) as well as the relative air humidity (0...100 % RH). The measuring transducer converts the measured values into a standard signal of 0-10 V or 4...20 mA (switchable).

The sensor is used in offices, hotels, convention centres, apartments, shops, etc. for the purpose of evaluating the indoor climate. This enables energy-saving room ventilation on an as-needed basis, thereby reducing operating costs and improving well-being. One sensor for every 30 m² of room area is recommended.

A long-term stable, **digital humidity and temperature sensor** guarantees exact measurement results. The CO2 measurement is performed using an optical **NDIR sensor** (non-dispersive infra-red technology). The detection range is calibrated for standard applications such as monitoring residential rooms and conference rooms. The air quality is detected by a **VOC sensor** (mixed gas sensor for volatile organic substances). This sensor determines the loading of the room air due to contaminated gases such as cigarette smoke, body perspiration, exhaled breathing air, solvent vapours, emissions etc. With regard to the expected air contamination, low, medium or high VOC sensitivity can be selected. As an alternative, use IAQ categories (from excellent to unhealthy) following the guidelines of the German Federal Environmental Agency to assess the room air.

## TECHNICAL DATA

| | |
|---|---|
| Voltage supply: | 24 V AC / DC (± 10 %) |
| Power consumption: | < 4.8 W / 24 V DC typical; < 6.8 VA / 24 V AC typical; peak current 200 mA |
| Outputs: | **KTM-CO2-SD** 0-10 V (fixed)<br>**Kxx-CO2-W** 0-10 V **or** 4...20 mA, working resistance < 800 Ω<br>(selectable via DIP switches, selected variant applies for all outputs),<br>with offset potentiometer (± 10 % of the measuring range) |
| Relay output: | **KTM-CO2-SD** without changeover contact<br>**Kxx-CO2-W** with potential-free **changeover contact** (24 V / 1 A)<br>(assignment selectable via DIP switches, switchpoint adjustable) |
| **HUMIDITY** | |
| Sensors: | **digital humidity sensor with integrated temperature sensor,**<br>low hysteresis, high long-term stability |
| Sensor protection: | plastic sinter filter, Ø 16 mm, L = 35 mm, exchangeable<br>(optional metal sinter filter, Ø 16 mm, L = 32 mm) |
| Measuring range, humidity: | 0...100 % RH |
| Operating range, humidity: | 0...95 % RH (without dew formation) |
| Deviation of humidity: | typically **± 2.0** % (20...80 % RH) at +25 °C, otherwise ± 3.0 % |
| Output, humidity: | 0-10 V **or** 4...20 mA (selectable via DIP switches) |
| **TEMPERATURE** | |
| Measuring range, temperature: | –35...+80 °C |
| Operating range, temperature: | –10...+60 °C |
| Temperature deviation: | typically ± 0.2 K at +25 °C |
| Output, temperature: | **KTM-CO2-SD** 0-10 V (fixed)<br>**Kxx-CO2-W** 0-10 V **or** 4...20 mA (selectable via DIP switches) |
| **AIR QUALITY (VOC)** | |
| Sensor, VOC: | VOC sensor (metal oxide)<br>(VOC = volatile organic compounds),<br>with manual calibration (using zero button) and<br>automatic calibration (permanently active) |
| Measuring range, VOC: | 0...100 % air quality; referred to calibrating gas;<br>**multi-range switching** (selectable via DIP switches)<br>VOC sensitivities (low/medium/high) or IAQ category (Indoor Air Quality) |
| Output, VOC: | 0-10 V (0 V = clean air, 10 V = polluted air) **or**<br>4...20 mA (selectable via DIP switches,<br>switchpoint can be adjusted from 0...100 % of the output signal) |
| Measuring accuracy, VOC: | typically ± 20 % of final value (referred to calibrating gas) |
| Service life: | > 60 months (under normal load conditions)<br>depending on the type of loading and gas concentration |
| **CARBON DIOXIDE (CO2)** | |
| Sensor, CO2: | **optical NDIR sensor** (non-dispersive infra-red technology),<br>with manual calibration (via zero button),<br>**KTM-CO2-SD** with automatic calibration (fixed)<br>**Kxx-CO2-W** with automatic calibration (can be deactivated via DIP switches) |
| Measuring range, CO2: | 0...2000 ppm **or** 0...5000 ppm (selectable via DIP switches) |
| Output, CO2: | **KTM-CO2-SD** 0-10 V (fixed)<br>**Kxx-CO2-W** 0-10 V **or** 4...20 mA (selectable via DIP switches) |
| Measuring accuracy, CO2: | typically ± 30 ppm ± 3 % of measured value |
| Temperature dependence, CO2: | ± 5 ppm per °C or ± 0.5 % of measured value per °C<br>(whichever is higher) |

continued on next page!

**SF-K**
Plastic sinter filter (standard)



**SF-M**
Metal sinter filter (optional)



**MFT-20-K**
Mounting flange, plastic



Dimensional drawing [mm] **MFT-20-K**

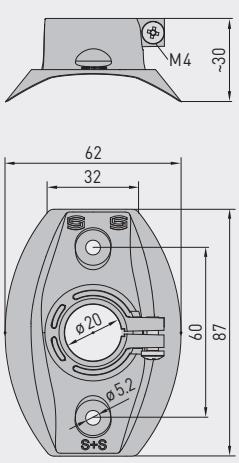

S+S REGELTECHNIK

# AERASGARD® KLQ-CO2-W
# AERASGARD® KFTM-(LQ)-CO2-W / KTM-CO2-SD

**Multifunctional duct sensors and measuring transducers incl. mounting flange, for humidity, temperature, CO2 content and air quality (VOC), calibratable, with active/switching output**

Dimensional drawing [mm]

**KFTM-LQ-CO2-W**

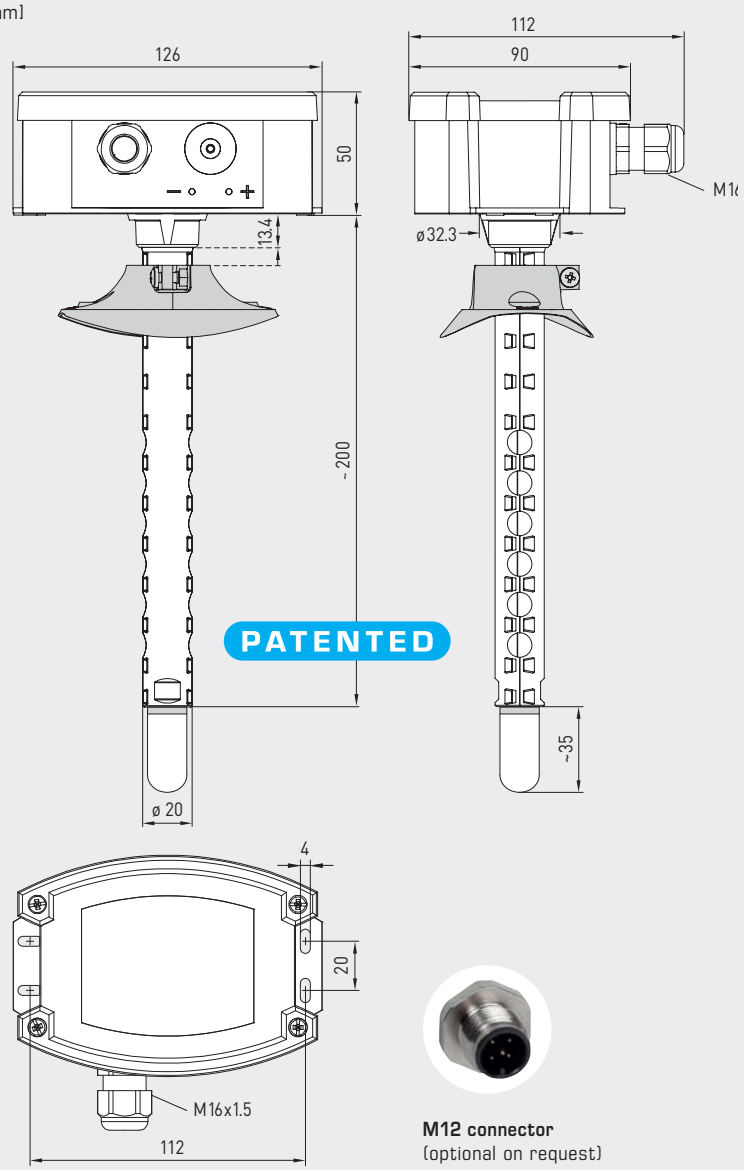




**M12 connector**
(optional on request)

**KFTM-LQ-CO2-W**
with plastic sinter filter (standard)




**KFTM-LQ-CO2-W**
with display and plastic sinter filter (standard)




| TECHNICAL DATA | (continued) |
|---|---|
| Pressure dependence: | ± 0.13 % per mm Hg |
| Long-term stability: | < 2 % in 15 years |
| Gas exchange: | by diffusion |
| Response time: | < 2 minutes, minimum flow rate 0.3 m/s (air) |
| Ambient temperature: | –10...+60 °C |
| Electrical connection: | 0.14 - 1.5 mm², via screw terminals |
| Cable connection: | **cable gland**, plastic (M 16 x 1.5; with strain relief, exchangeable, max. inner diameter 10.4 mm) **or** **M12 connector** according to DIN EN 61076-2-101 (optional on request) |
| Housing: | plastic, UV-resistant, material polyamide, 30 % glass-globe reinforced, with quick-locking screws (slotted / Phillips head combination), colour traffic white (similar to RAL 9016),,housing cover for display is transparent! |
| Housing dimensions: | 126 x 90 x 50 mm (Tyr 2) |
| Protective tube: | **PLEUROFORM**™, material polyamide (PA6), with torsion protection, $v_{max}$ = 30 m/s (air) Ø 20 mm, NL = 202.5 mm without filter, NL = 235 mm with plastic filter (optional 100 mm) |
| Process connection: | via flange made of plastic (included in scope of delivery) |
| Protection class: | III (according to EN 60 730) |
| Protection type: | **IP 65** (according to EN 60 529) Housing in the built-in state (permeable PLEUROFORM: IP 30) |
| Standards: | CE conformity, electromagnetic compatibility according to EN 61 326, EMC Directive 2014 / 30 / EU |
| Optional: | three-line **display with illumination,** cutout approx. 70 x 40 mm (W x H), for displaying actual humidity, actual temperature, air quality and/or the actual CO2 content |

# AERASGARD® KLQ-CO2-W
# AERASGARD® KFTM-(LQ)-CO2-W / KTM-CO2-SD

**Multifunctional duct sensors and measuring transducers incl. mounting flange, for humidity, temperature, CO2 content and air quality (VOC), calibratable, with active/switching output**

S+S REGELTECHNIK

Schematic diagram **KFTM-LQ-CO2-W**

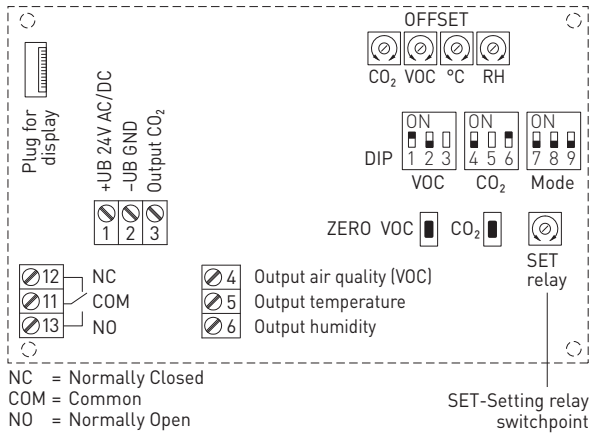


Schematic diagram **KTM-CO2-SD**

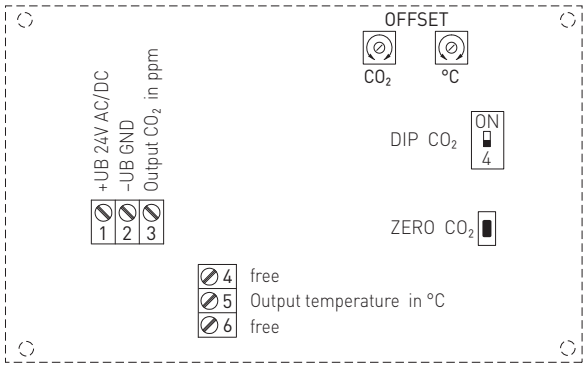


| DIP switches | KFTM-LQ-CO2-W | |
|---|---|---|
| **VOC sensitivity** | **DIP 1** | **DIP 2** |
| LOW | OFF | OFF |
| MEDIUM (default) | **ON** | OFF |
| HIGH | OFF | **ON** |
| **IAQ** (Indoor Air Quality) | **ON** | **ON** |
| **CO2 content** | | **DIP 4** |
| 0...2000 ppm (default) | | OFF |
| 0...5000 ppm | | **ON** |
| **CO2 automatic zero point** | | **DIP 6** |
| deactivated | | OFF |
| activated (default) | | **ON** |
| **Relay assignment** | **DIP 7** | **DIP 8** |
| CO2 (default): 600...1900 ppm / 900...4700 ppm | OFF | OFF |
| VOC: 10...95 % | **ON** | OFF |
| Temperature: –23...+74 °C | OFF | **ON** |
| Humidity: 10...95% RH | **ON** | **ON** |
| **Output** | | **DIP 9** |
| Voltage 0-10 V (default) | | OFF |
| Current 4...20 mA | | **ON** |
| Note: **DIP 3** and **DIP 5** are not assigned! | | |

| DIP switches | KTM-CO2-SD |
|---|---|
| **CO2 content** | **DIP 4** |
| 0...2000 ppm (default) | OFF |
| 0...5000 ppm | **ON** |

| Level | IAQ (Indoor Air Quality) | VOC |
|---|---|---|
| 1 | **excellent**<br>no action required | **0**...**19** % |
| 2 | **good**<br>prompt airing recommended | **20**...**39** % |
| 3 | **moderate**<br>airing recommended | **40**...**59** % |
| 4 | **poor**<br>increased airing required | **60**...**79** % |
| 5 | **unhealthy**<br>intense airing necessary | **80**...**100** % |

Table according to TVOC guidelines of the German Federal Environmental Agency to assess indoor air contamination
*(Bundesgesundheitsbl - Gesundheitsforsch - Gesundheitsschutz 2007, 50: 990–1005)*

S+S REGELTECHNIK

# AERASGARD® KLQ-CO2-W
# AERASGARD® KFTM-(LQ)-CO2-W / KTM-CO2-SD

**Multifunctional duct sensors and measuring transducers incl. mounting flange, for humidity, temperature, CO2 content and air quality (VOC), calibratable, with active/switching output**

**KFTM-LQ-CO2-W**
with display








**Humidity table**
MR: 0...100 % RH

| % RH | $U_A$ [V] | $I_A$ [mA] |
|---|---|---|
| **0** | 0 | 4.0 |
| **5** | 0.5 | 4.8 |
| **10** | 1.0 | 5.6 |
| **15** | 1.5 | 6.4 |
| **20** | 2.0 | 7.2 |
| **25** | 2.5 | 8.0 |
| **30** | 3.0 | 8.8 |
| **35** | 3.5 | 9.6 |
| **40** | 4.0 | 10.4 |
| **45** | 4.5 | 11.2 |
| **50** | 5.0 | 12.0 |
| **55** | 5.5 | 12.8 |
| Continued at the right ... | | |

| % RH | $U_A$ [V] | $I_A$ [mA] |
|---|---|---|
| **60** | 6.0 | 13.6 |
| **65** | 6.5 | 14.4 |
| **70** | 7.0 | 15.2 |
| **75** | 7.5 | 16.0 |
| **80** | 8.0 | 16.8 |
| **85** | 8.5 | 17.6 |
| **90** | 9.0 | 18.4 |
| **95** | 9.5 | 19.2 |
| **100** | 10.0 | 20.0 |

**Temperature table**
MR: –35...+80 °C

| °C | $U_A$ [V] | $I_A$ [mA] |
|---|---|---|
| **-35** | 0.0 | 4.0 |
| **-30** | 0.4 | 4.7 |
| **-25** | 0.9 | 5.4 |
| **-20** | 1.3 | 6.1 |
| **-15** | 1.7 | 6.8 |
| **-10** | 2.2 | 7.5 |
| **-5** | 2.6 | 8.2 |
| **0** | 3.0 | 8.9 |
| **+5** | 3.5 | 9.6 |
| **+10** | 3.9 | 10.3 |
| **+15** | 4.3 | 11.0 |
| **+20** | 4.8 | 11.7 |
| Continued at the right ... | | |

| °C | $U_A$ [V] | $I_A$ [mA] |
|---|---|---|
| **+25** | 5.2 | 12.3 |
| **+30** | 5.7 | 13.0 |
| **+35** | 6.1 | 13.7 |
| **+40** | 6.5 | 14.4 |
| **+45** | 7.0 | 15.1 |
| **+50** | 7.4 | 15.8 |
| **+55** | 7.8 | 16.5 |
| **+60** | 8.3 | 17.2 |
| **+65** | 8.7 | 17.9 |
| **+70** | 9.1 | 18.6 |
| **+75** | 9.6 | 19.3 |
| **+80** | 10.0 | 20.0 |

# AERASGARD® KLQ-CO2-W
# AERASGARD® KFTM-(LQ)-CO2-W / KTM-CO2-SD

**Multifunctional duct sensors and measuring transducers incl. mounting flange, for humidity, temperature, CO2 content and air quality (VOC), calibratable, with active/switching output**

S+S REGELTECHNIK

Dimensional drawing
[mm]

**KLQ-CO2-W**

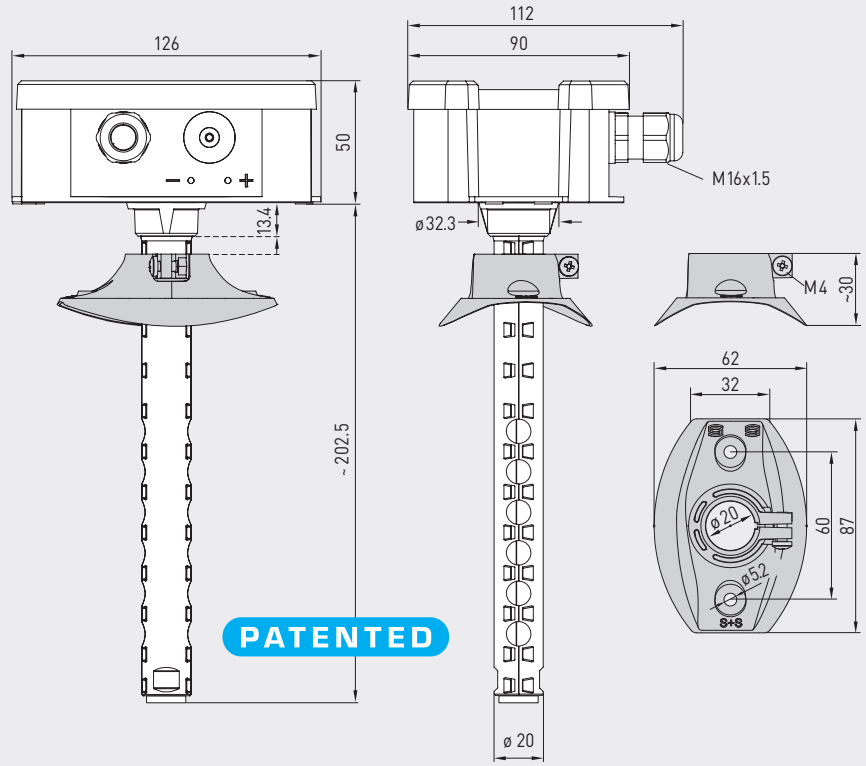


**KLQ-CO2-W**



Dimensional drawing
[mm]

**KFTM-CO2-W**
**KFTM-LQ-CO2-W**
**KTM-CO2-SD**

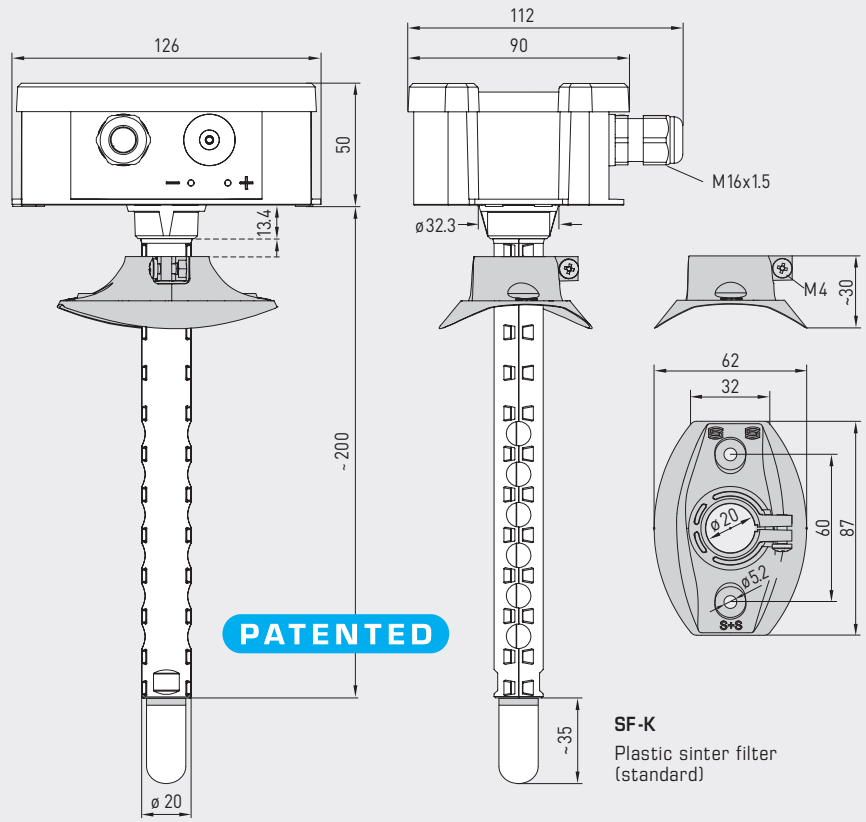


**SF-K**
Plastic sinter filter
(standard)

**KFTM-CO2-W**
**KFTM-LQ-CO2-W**
**KTM-CO2-SD**



**SF-M**
Metal sinter filter
(optional)

# AERASGARD® KLQ-CO2-W
# AERASGARD® KFTM-(LQ)-CO2-W / KTM-CO2-SD

**Multifunctional duct sensors and measuring transducers incl. mounting flange, for humidity, temperature, CO2 content and air quality (VOC), calibratable, with active/switching output**

Mounting diagram — **KLQ-CO2-W**, **KFTM-LQ-CO2-W**, **KTM-CO2-SD**

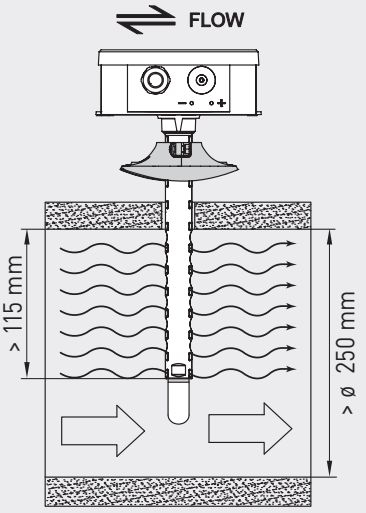


| | |
|---|---|
| **AER**ASGARD® **KTM-CO2-SD** | Duct sensor for temperature and CO2 content, *Standard* |
| **AER**ASGARD® **KLQ-CO2-W** | Duct sensor for air quality (VOC) and CO2 content, *Premium* |
| **AER**ASGARD® **KFTM-CO2-W** | Multifunctional duct sensor for humidity, temperature and CO2 content, *Deluxe* |
| **AER**ASGARD® **KFTM-LQ-CO2-W** | Multifunctional duct sensor for humidity, temperature, air quality (VOC) and CO2 content, *Deluxe* |

| Type / WG02 | Measuring Range Humidity | Temperature | CO2 | VOC | Equipment Display | Item No. | Price |
|---|---|---|---|---|---|---|---|
| **KTM-CO2-SD** | | | (switchable) | | | | |
| KTM-CO2-SD-U | – | –35…+80 °C | 0…2000 / 5000 ppm | – | – | 1501-8112-1001-200 | **314,14 €** |
| **KLQ-CO2-W** | | | (switchable) | | | | |
| KLQ-CO2-W | – | – | 0…2000 / 5000 ppm | 0…100 % | W | 1501-8111-7301-500 | **402,07 €** |
| KLQ-CO2-W **LCD** | – | – | 0…2000 / 5000 ppm | 0…100 % | W ■ | 1501-8111-7371-500 | **462,83 €** |
| **KFTM-CO2-W** | | | (switchable) | | | | |
| KFTM-CO2-W | 0…100 % RH | –35…+80 °C | 0…2000 / 5000 ppm | – | W | 1501-8116-7301-200 | **384,18 €** |
| KFTM-CO2-W **LCD** | 0…100 % RH | –35…+80 °C | 0…2000 / 5000 ppm | – | W ■ | 1501-8116-7371-200 | **421,12 €** |
| **KFTM-LQ-CO2-W** | | | (switchable) | | | | |
| KFTM-LQ-CO2-W | 0…100 % RH | –35…+80 °C | 0…2000 / 5000 ppm | 0…100 % | W | 1501-8118-7301-500 | **481,88 €** |
| KFTM-LQ-CO2-W **LCD** | 0…100 % RH | –35…+80 °C | 0…2000 / 5000 ppm | 0…100 % | W ■ | 1501-8118-7371-500 | **542,65 €** |
| Outputs: | **0-10 V or 4…20 mA** (selectable via DIP switches, selected variant applies for all outputs) – *Standard* duct sensor **KTM-CO2-SD** with fixed output 0-10 V! | | | | | | |
| Equipment: | **W = changeover contact** – *Standard* duct sensor **KTM-CO2-SD** without changeover contact! | | | | | | |
| Optional: | Cable connection with **M12 connector** according to DIN EN 61076-2-101 | | | | | on request | |
| | shortened protective tube **PLEUROFORM**™, NL = 100 mm | | | | | on request | |
| **Note:** | This unit **must not** be used as safety-relevant device! | | | | | | |

| ACCESSORIES | | | |
|---|---|---|---|
| **SF-M** | **Metal** sinter filter, Ø 16 mm, L = 32 mm, exchangeable stainless steel **V4A** (1.4404) | 7000-0050-2200-100 | **43,60 €** |