Shock-Safe Fuseholder, 5 x 20 mm, Slotted Cap, vertical, IP 40 / IP 54



Variant 1



Variant 2

250 VAC · 2 W / 6.3 A (VDE) 12 A (UL)

Description
- Vertical style
- IP 40 oder IP 54 from frontside

Standards
- IEC 60127-6
- UL 512
- CSA C22.2 no. 39

Approvals
- VDE Certificate Number: 129370
- UL File Number: E39328
- CSA File Number: 38456

Weblinks
pdf-datasheet, html-datasheet, General Product Information, Approvals, CE declaration of conformity, RoHS, CHINA-RoHS, REACH, e-Shop, SCHURTER-Stock-Check, Distributor-Stock-Check, Detailed request for product

Technical Data

Shock-Safe Category	PC2
Fuse-Link	5 x 20 mm
Mounting	PCB
Terminal	Solder THT
Rated Voltage	250 VAC
Rated current	6.3 A (VDE), 12 A (UL)
Rated Power Acceptance IEC	2 W / 6.3 A @ Ta 23 °C Admissible power acceptance at higher ambient temperature see derating curves
Degree of Protection	IP 40 / IP 54
Protection Class	Suitable for appliances with protection class I or II acc. to IEC 61140
Admissible Ambient Air Temp.	-40 °C to 85 °C
Climatic Category	40/085/21 acc. to IEC 60068-1
Material: Socket	Thermoplastic, black, UL 94V-0
Material: Cap	Thermoplastic, black, UL 94V-0
Material: Terminals	Tin-Plated Copper Alloy
Unit Weight	5.03 g
Storage Conditions	0 °C to 60 °C, max. 70% r.h.
Product Marking	SCHURTER, Type, Rated voltage, Rated current, Power Rating, Approvals

Soldering Methods	Wave
Solderability	245 °C / 3 sec acc. to IEC 60068-2-20, Test Ta, method 1
Resistance to Soldering Heat	260 °C / 10 sec acc. to IEC 60068-2-20, Test Tb, method 1
Contact Resistance	≤ 10 mΩ at 20 mV acc. to IEC 60127-6
Dielectric Strength	> 3 kV between Life parts (50 Hz; 1 min)
Impulse Withstand Voltage	> 4 kV between Life parts
Insulation Resistance	≥ 10 MΩ between Life parts (500 VDC; 1 min)
Overvoltage Category	III acc. to IEC 60664-1
Pollution Degree	3 acc. to IEC 60664-1
Resistance to Vibration	acc. to IEC 60068-2-6, test Fc

Dimension

38.4 mm

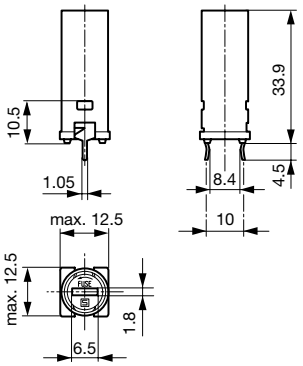

Variant 1: 0031.3701 and 0031.3703

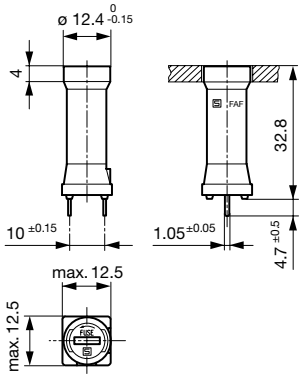

Variant 2: 0031.3751 and 0031.3753

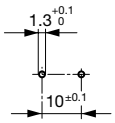

Drilling diagram

Derating Curves

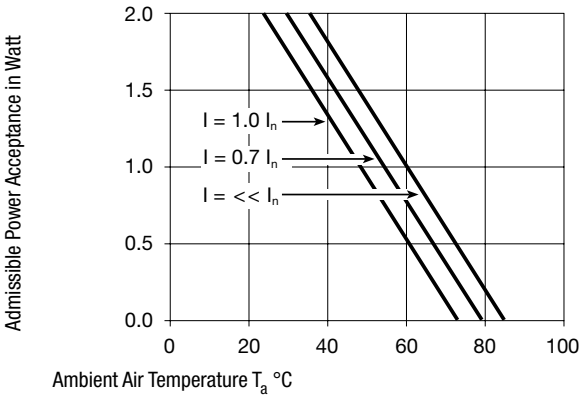

All Variants

Holder	Cap	Terminal	Degree of Protection	Order Number	
●	slotted	Straight	IP 40	0031.3701	▮
●	slotted	Kicked	IP 40	0031.3703	▮
●	slotted	Straight	IP 40	0031.3751	▮
●	slotted	Straight	IP 54	0031.3753	▮

▮ Most Popular.

Availability for all products can be searched real-time:http://www.schurter.com/en/Stock-Check/Stock-Check-SCHURTER

Packaging Unit Bulk (100 pcs.)

03.03.2015

The specifications, descriptions and illustrations indicated in this document are based on current information. All content is subject to modifications and amendments. Information furnished is believed to be accurate and reliable. However, users should independently evaluate the suitability and test each product selected for their own applications.