KI5052

Capacitive sensor

KIE3015-FPKG/NI/55V/US-100-DPX

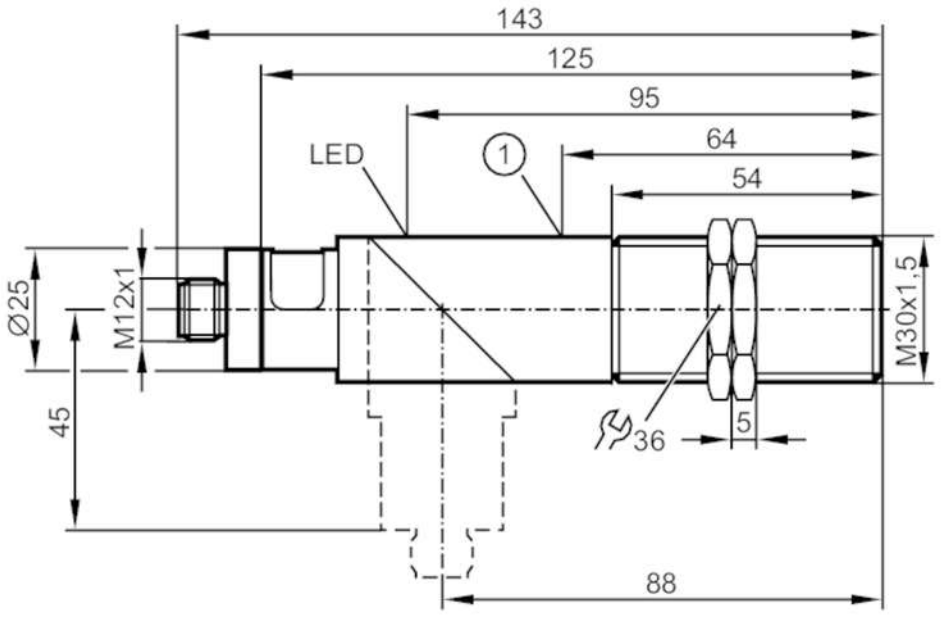

1 potentiometer

Product characteristics		
Electrical design		PNP
Output function		normally open / normally closed; (selectable)
Sensing range	[mm]	15
Housing		threaded type
Dimensions	[mm]	M30 x 1.5 / L = 143
Electrical data		
Operating voltage	[V]	10...55 DC; ("supply class 2" to cULus)
Current consumption	[mA]	14; (24 V)
Protection class		II
Reverse polarity protection		yes
Outputs		
Electrical design		PNP
Output function		normally open / normally closed; (selectable)
Max. voltage drop switching output DC	[V]	2.5
Permanent current rating of switching output DC	[mA]	250
Switching frequency DC	[Hz]	40
Short-circuit proof		yes
Overload protection		yes
Detection zone		
Sensing range	[mm]	15

KI5052

Capacitive sensor

KIE3015-FPKG/NI/55V/US-100-DPX

Operating conditions			
Ambient temperature	[°C]	-25...70	
Protection		IP 65	
Increased immunity		yes; (increased immunity to conducted radio frequency interference)	
Tests / approvals			
EMC		EN 60947-5-2	
MTTF	[years]	743	
Mechanical data			
Weight	[g]	146	
Housing		threaded type	
Mounting		non-flush mountable	
Dimensions	[mm]	M30 x 1.5 / L = 143	
Thread designation		M30 x 1.5	
Materials		PBT; end cap: PC	
Displays / operating elements			
Display		switching status	1 x LED, yellow
Accessories			
Items supplied		lock nuts: 2	
Remarks			
Pack quantity		1 pcs.	
Electrical connection - plug			

Connector: 1 x M12; coding: A



Connection

