8BCM0005.3034C-0

1 General information

- Extremely flexible
- itec - Innovative connector system for fast and secure connections

2 Order data

Model number	Short description	Figure
	Motor cables	
8BCM0005.3034C-0	Motor cable, length 5 m, 4x 0.75 mm² + 2x 2x 0.34 mm², 8-pin female series 915 power connector	

Table 1: 8BCM0005.3034C-0 - Order data

3 Technical data

Model number	8BCM0005.3034C-0
General information	
Cable cross section	4x 0.75 mm² + 2x 2x 0.34 mm²
Durability	Oil resistance TM5 per VDE 0281 Part 1 / HD21.1 Flame resistance per IEC 60332-1-2 / UL 2556 (VW-1) / CSA C22.2 No. 210.2 (FT-1) [1]
Certification	UL Style 2570 80°C 1000 V VW-1 E130266 and cUL AWM I/II A/B 80°C 1000 V FT-1 [1]
Certifications	
CE	Yes
UL	cULus E225616 Power conversion equipment
EAC	Yes
Cable construction	
Power lines	
Quantity	4
Wire insulation	PP
Wire colors	Black, brown, blue, yellow/green
Variant	Tinned copper stranded wire
Cross section	0.75 mm²
Shield	No
Stranding	No
Signal line	
Quantity	4
Wire insulation	PP
Wire colors	White, white/red, white/blue, white/green
Variant	Tinned copper stranded wire
Cross section	0.34 mm²
Shield	Individually shielded in pairs, tinned copper braiding, optical coverage >85% and foil shield
Stranding	White with white/red and white/blue with white/green
Cable stranding	With filler elements and foil shield
Cable shield	Tinned copper braiding, optical coverage >85% and foil shield
Outer jacket	
Material	PVC
Color	Orange, similar to RAL 2003 flat
Labeling	B&R 4x0.75+2x2x0.34 XX/YYYY E130266 cURus AWM STYLE 2570 I/II A/B 80°C 1000 V FT-1 [1][2]
Connector	
Type	8-pin female series 915 power connector
Mating cycles	<500
Contacts	8 (4 power and 4 signal contacts)
Degree of protection per EN 60529	IP66/67 when connected
Electrical properties [1]	
Test voltage	
Wire - Wire	4 kV
Wire - Shield	3 kV
Conductor resistance	
Power lines	≤58.3 Ω/km
Signal line	≤26.7 Ω/km

Table 2: 8BCM0005.3034C-0 - Technical data

Model number	8BCM0005.3034C-0
Insulation resistance	≥100 MΩ*km
Current-carrying capacity per DIN VDE 0298 part 4, table 11	
Wall mounting	9.8 A
Installed in conduit or cable duct	8.5 A
Installed in cable tray	10.4 A
Ambient conditions 1)	
Temperature	
Moving	-20°C to +80°C
Static	-20°C to +90°C
Mechanical properties 1)	
Dimensions	
Length	5 m
Diameter	10.6 mm ±0.4 mm
Bend radius	
Single bend	>55 mm
Moving	≥165 mm
Weight	1.2 kg

Table 2: 8BCM0005.3034C-0 - Technical data

1) Values refer to the raw cable being used.
2) XX ... Week of manufacture, YYYY ... Year of manufacture

4 Wiring

Construction

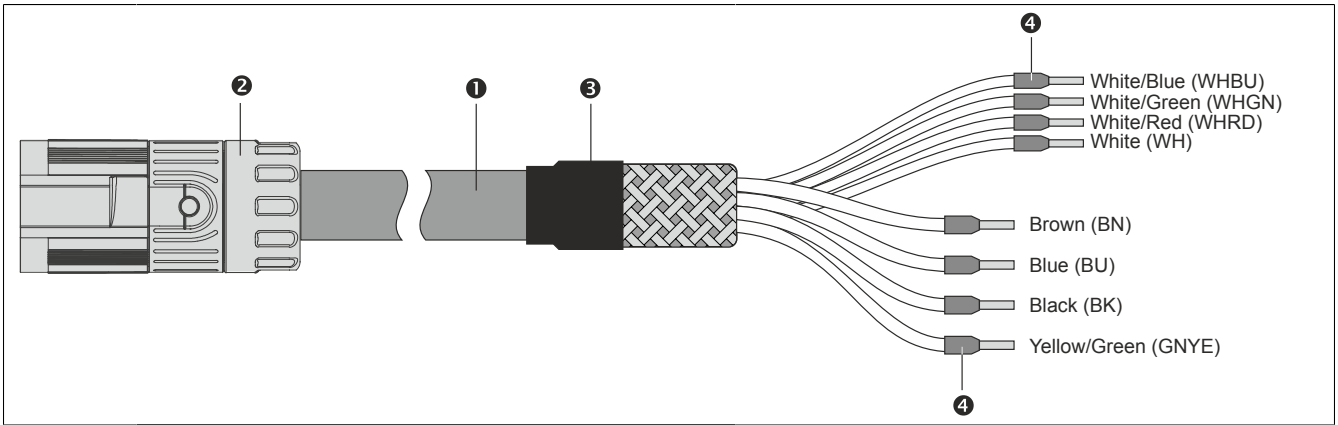

Pos.	Name	Note
1	Motor line	4x 0.75 mm² + 2x 2x 0.34 mm²
2	8-pin motor connector	
3	Heat shrink tubing	
4	Wire end sleeve	

Table 3: 8BCMxxxx.x034C-0 motor cables - Construction

Pinout

Circular connector	Pin	Name	Function
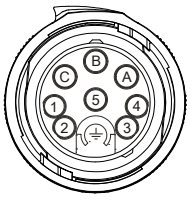	A	U	Motor connection U
	B	V	Motor connection V
	C	W	Motor connection W
	PE	PE	Protective ground conductor
	1	T+	Temperature +
	2	T-	Temperature -
	3	B+	Brake +
	4	B-	Brake -
	5	---	---

Table 4: 8BCMxxxx.x034C-0 motor cables - Pinout

Cable diagram

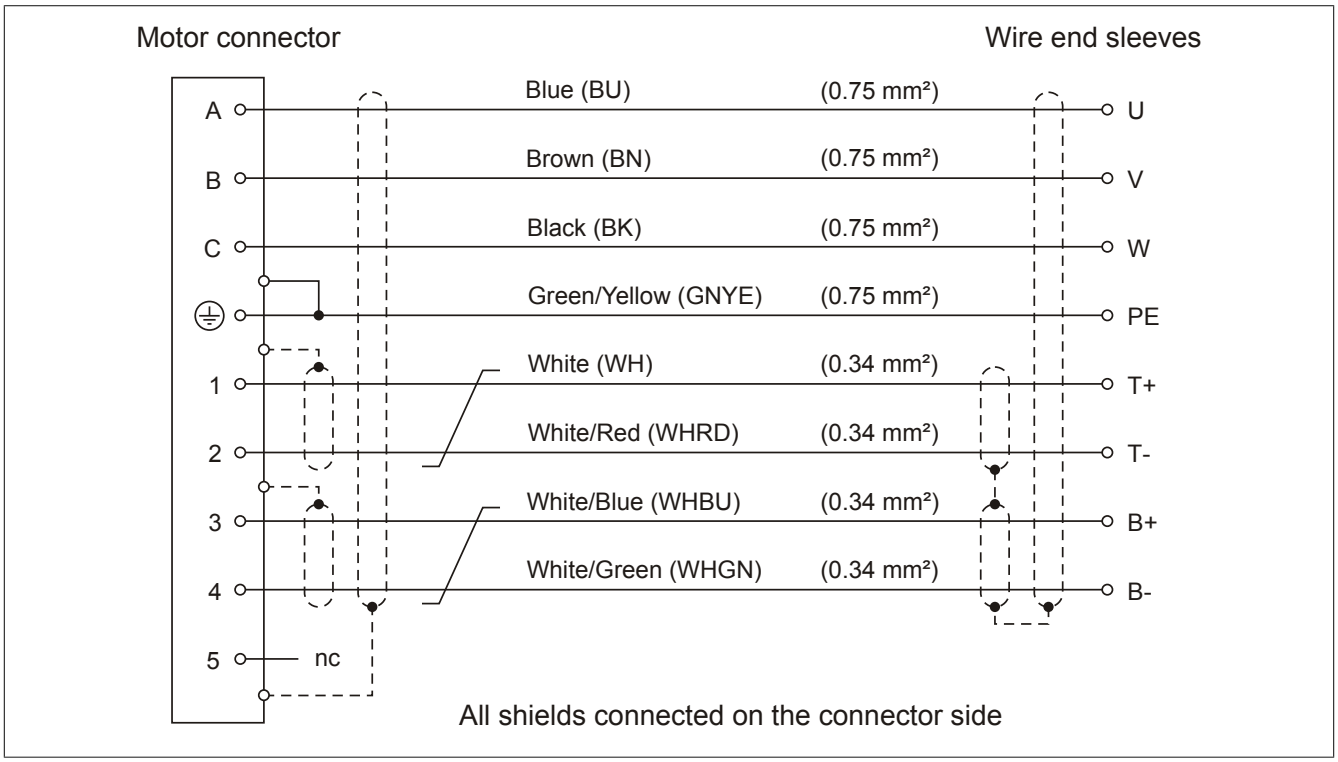

Figure 1: 8BCMxxxx.x034C-0 motor cables - Cable diagram