Product description



- Field mountable Industrial Ethernet Connector, M12 X-coded acc. to IEC 61076-2-109
- Suitable for industrial applications
- Robust and resistant to vibration
- No special tools needed

General characteristics

Ambient temperature	-40 to +85 °C
Protection degree	IP 67
Termination type	IDC
Outer diameter, cable	5.5 – 9.0 mm
Outer diameter, wire	0.9 – 1.6 mm
Termination cross section, stranded, 7 wires	AWG27/7 – AWG22/7
Termination cross section, solid	AWG24/1 – AWG22/1
Pollution degree	3
Overvoltage category	II

Mechanical properties

Insertion force	≤ 30 N
Mating cycles	≥ 100

Electrical properties

Rated voltage	50 V AC, 60 V DC
Current carrying capacity at 40°C	0,5 A
Insulation resistance	≥ 100 MΩ

Transmission characteristics

Suitable for 10 Gigabit Ethernet acc. to IEEE 802.3an	yes

Materials

Connector housing	Zinc diecast nickel-plated, brass nickel-plated
Contact surface	Ni + Au
Contact housing and clamp cage	PA UL94 V0
Sealings	NBR

Approvals

UL listed, E-File	E353543

Standards

Product standard	DIN EN 61076-2-109
UL standard for communication circuit accessories	UL 1863
Generic cabling systems	ISO/IEC 11801, DIN EN 50173-1
Salt-Spray	DIN EN 60068-2-11 02/48H

We reserve all rights according to DIN ISO 16016.

Drawings

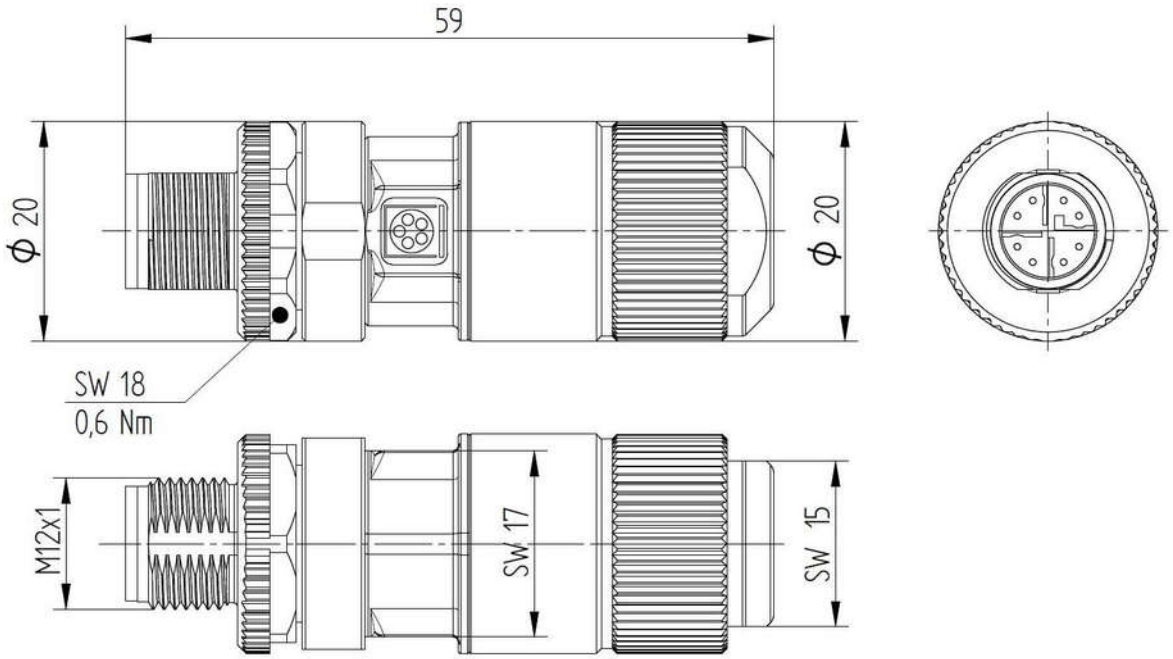

Application range

Automation, industrial machinery, and plant engineering.

Note

Photographs are not true to scale and do not represent detailed images of the respective products.

We reserve all rights according to DIN ISO 16016.