OGS700

Through-beam laser sensor transmitter

OGSLOOKG/US100

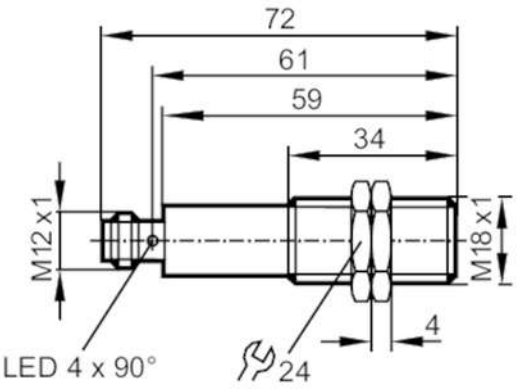

Product characteristics		
Type of light		red light
Laser protection class		1
Housing		threaded type
Application		
Function principle		Through-beam sensor
Electrical data		
Operating voltage	[V]	10...36 DC
Current consumption	[mA]	13
Protection class		II
Reverse polarity protection		yes
Type of light		red light
Wave length	[nm]	655
Typ. lifetime	[h]	50000
Detection zone		
Transmitter / receiver		transmitter
Range	[m]	< 60
Range adjustable		no
Diameter of the smallest detectable object	[mm]	3; (60 m)
Max. light spot diameter	[mm]	312
Light spot dimensions refer to		at maximum range
Operating conditions		
Ambient temperature	[°C]	-10...60
Protection		IP 65; IP 67
Tests / approvals		
EMC		EN 60947-5-2
Laser protection class		1

OGS700

Through-beam laser sensor transmitter

OGSLOOKG/US100

Notes on laser protection		Caution:	laser light
		laser class:	1
			EN / IEC60825-1:2007
			EN / IEC60825-1:2014
			Complies with 21 CFR 1040 except for deviations pursuant to Laser Notice No. 50, dated June 2007.
MTTF	[years]	1018	

Mechanical data			
Weight	[g]	64.3	
Housing		threaded type	
Dimensions	[mm]	M18 x 1 / L = 72	
Thread designation		M18 x 1	
Materials		stainless steel (316L/1.4404); PA; EPDM	
Lens material		PMMA	

Displays / operating elements			
Display		operation	1 x LED, green

Accessories		
Items supplied		lock nuts: 2

Remarks		
Remarks		operating voltage "supply class 2" according to cULus
Pack quantity		1 pcs.

Electrical connection

Connector: 1 x M12; coding: A



Connection

