Hi-Force HYDRAULIC TOOLS

TDS1316

HP110 AND HP145 SINGLE SPEED HAND PUMP OPERATING INSTRUCTIONS

INTRODUCTION

The HP110 AND HP145 single speed hand pumps are manually operated hand pumps suitable for a wide range of applications. Both pumps are supplied complete, with a pre-filled oil reservoir ready for immediate use. They features low handle effort characteristics for easy operation, a lightweight design and is of strong durable steel construction. The HP110 and HP145 have a max working pressure of 700 bar.

SAFETY NOTES

All equipment used must be rated for the same operating pressure i.e 700 bar. (10,000 psi). **DO NOT** mix high and low pressure components. If in doubt contact your local Hi-Force Distributor.

Sufficient time should be allocated to planning your hydraulic system. Make sure that all system components are adequate for the intended operation.

Ensure that the pump has sufficient oil capacity to operate the cylinder being used.

DO NOT exceed the rated pressure of the pump or rated capacity of the cylinder. Never tamper with the internal safety relief valve of the pump.

Whenever possible use a pressure gauge in the system to prevent overloading.

The pump must only be used on single acting cylinders

TEST, EXAMINATION AND SERVICE.

1. Visually inspect all equipment before use for signs of damage or wear and tear. Any defective or suspect equipment should be repaired or replaced immediately.

2. All high-pressure hydraulic equipment should be thoroughly examined and proof tested by a competent engineer at least once a year - more frequently for heavy use.

3. Ask your Hi-Force distributor about the full Hi-Force Repair facilities and the Hi-Force Test and Examination Service - available for all makes of high-pressure hydraulic equipment.

HOSE CONNECTION.

1. Hose connections are 3/8NPT and must be properly tightened using a quality pipe thread sealant or 1-2 turns of P.T.F.E tape taking care *NOT* to allow loose ends of the tape to enter the hydraulic system. **DO NOT** over tighten connections - it can cause premature failure or rupture of fittings at below rated capacity.

2. Connect the male couplers on the hose ends to the female couplers on the cylinder. Ensure that both halves of the coupler are completely clean so that no dirt can enter the system. Fully tighten the two halves of the coupler **by hand only – do not use tools.**

HP110 AND HP145 SETUP AND OPERATION

1. The pump may be used either horizontally or vertically with the hose end downwards. The pump is equipped with a pressure relief valve factory set at the maximum operating pressure. Before use unscrew transit plug and replace with breather on the top of the tank. This will maximise the oil volume available. (HP110 used in all diagrams.)
   See Figure 1.

FIGURE 1

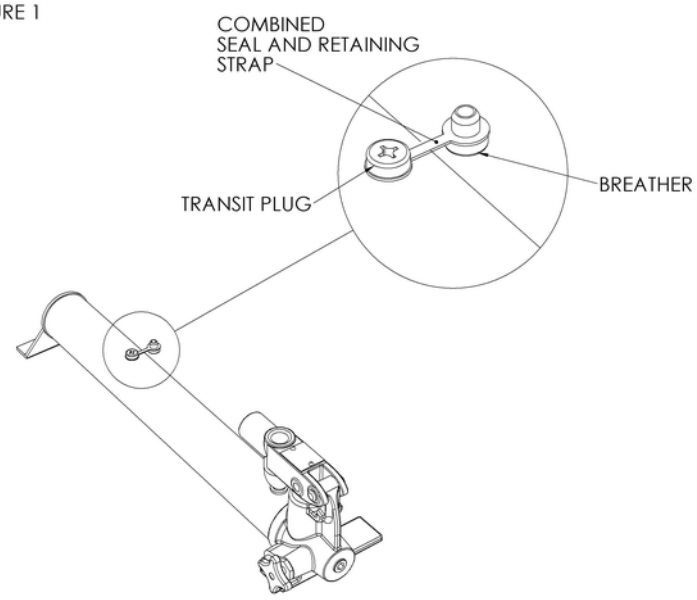

2. To advance the cylinder, turn the release knob fully clockwise. Operate pump handle. See Figure 2.

FIGURE 2.

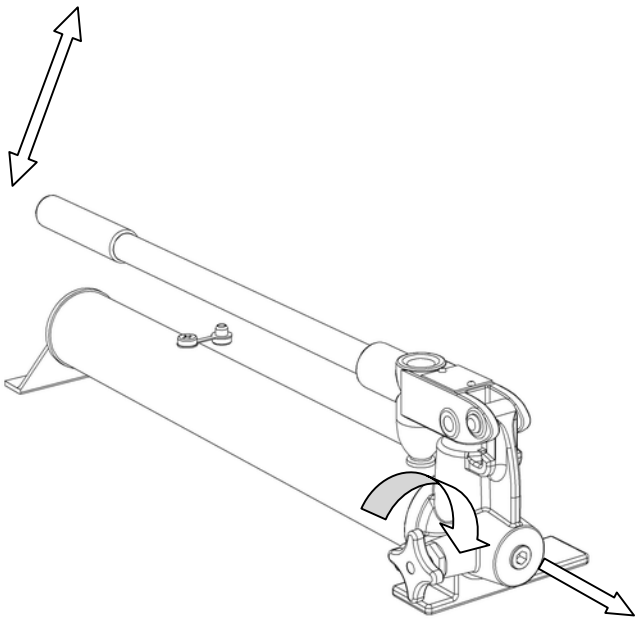

3. **Note: The cylinder will automatically be held in the advance position and will not retract of its own accord.**

4. To retract the cylinder turn release knob anti-clockwise slowly, ensuring that the cylinder does not retract too fast as to make the operation unsafe. See Figure 3.

FIGURE 3.

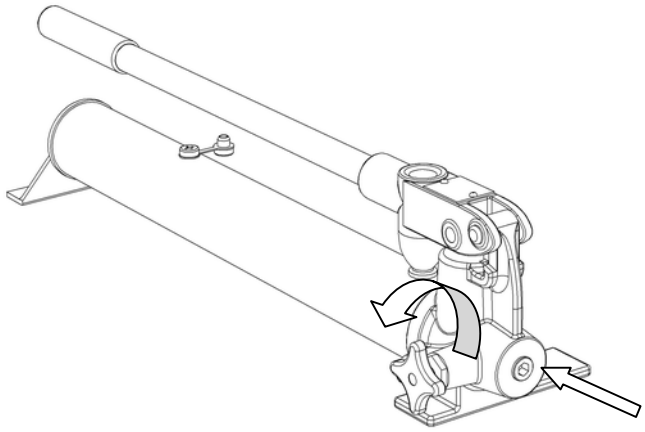

5. If pump is to be transported after use, replace the transit plug in tank.

WARNING: DO NOT RELY ON THE PUMP VALVE FOR POSITIVE LOAD HOLDING. IF IT IS REQUIRED TO LOCK THE LOAD IN POSITION USE A MANUAL SHUT OFF VALVE IN THE CIRCUIT. NEVER WORK UNDER A LOAD SUPPORTED ONLY BY HYDRAULIC MEANS.

FILLING WITH OIL.

Ensure cylinder is full retracted.
HP110: Position pump vertically with pump head downwards. Remove central plug on rear of pump and check oil level using dipstick fitted to plug.
Use only Hi-Force HF032 oil.

BLEEDING THE HYDRAULIC SYSTEM.

Connect a cylinder to the pump. Position the cylinder below the level of the pump with its pressure ports uppermost. Ensure the bleed screw on the pump is open. Operate the cylinder 3-4 times over its full stroke and all air should be forced back to the pump reservoir. **Warning**: when using a small cylinder with long hoses it is possible that air can remain trapped in the hose if the volume of the hose is greater than the volume of the cylinder. In this case the bleeding must be carried out using a shorter hose before use.
See Figure 4.



FIGURE 4.

