# IM5130

## Inductive sensor

IMC3035-BPKG/K1/US-100-DPS

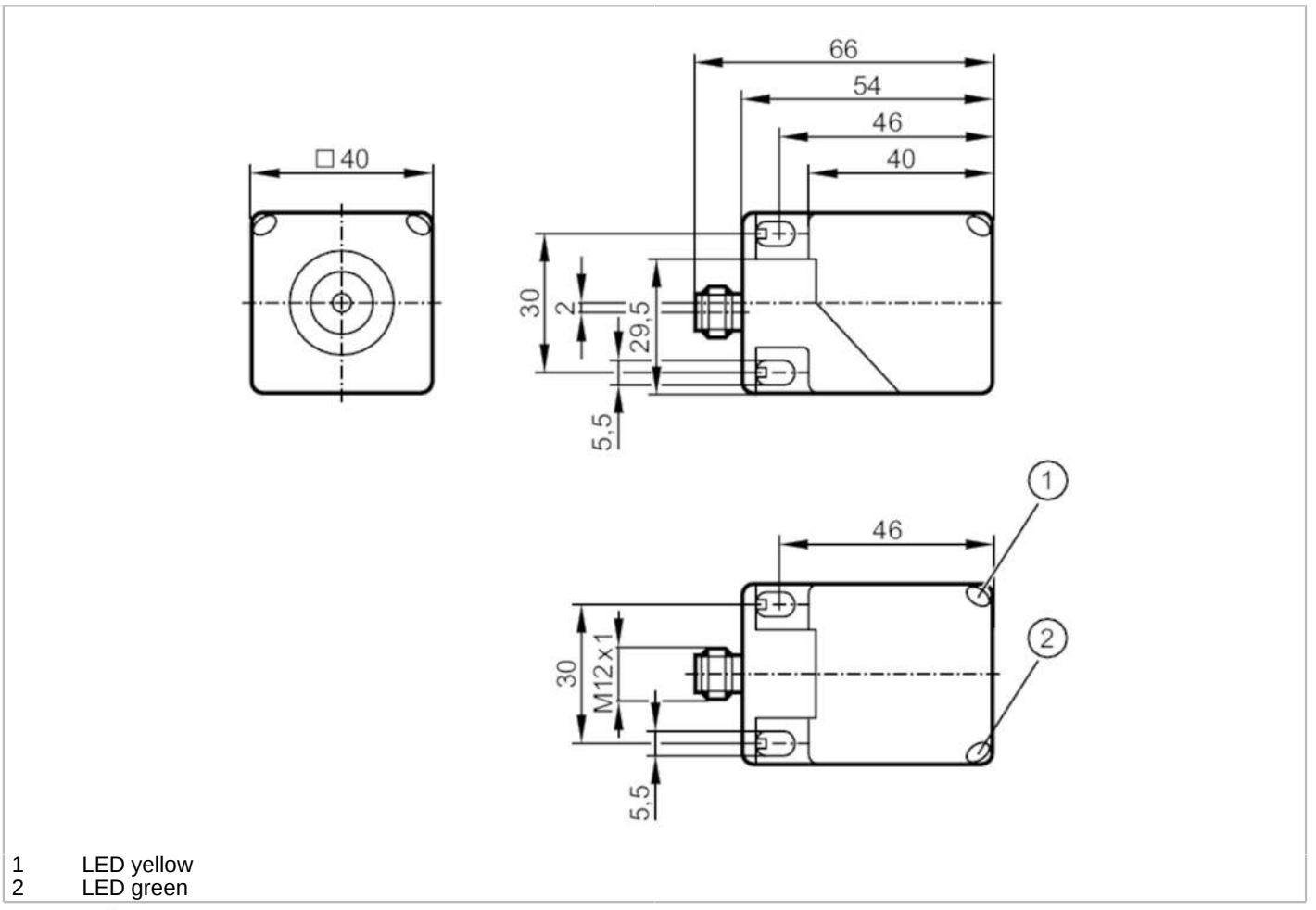


1 LED yellow
2 LED green

| | | |
|---|---|---|
| **Product characteristics** | | |
| Electrical design | | PNP |
| Output function | | normally open |
| Sensing range | [mm] | 35 |
| Housing | | rectangular |
| Dimensions | [mm] | 40 x 40 x 54 |
| **Application** | | |
| Special feature | | Correction factor K = 1; Magnetic-field immune |
| Magnetic-field immune | | yes |
| Max. magnetic field immunity | [mT] | 300 |
| **Electrical data** | | |
| Operating voltage | [V] | 10...36 DC |
| Current consumption | [mA] | < 20 |
| Protection class | | II |
| Reverse polarity protection | | yes |
| **Outputs** | | |
| Electrical design | | PNP |
| Output function | | normally open |

# IM5130

## Inductive sensor

IMC3035-BPKG/K1/US-100-DPS

| | | | |
|---|---|---|---|
| Max. voltage drop switching output DC | [V] | 2.5 | |
| Permanent current rating of switching output DC | [mA] | 200 | |
| Switching frequency DC | [Hz] | 200 | |
| Short-circuit protection | | yes | |
| Type of short-circuit protection | | pulsed | |
| Overload protection | | yes | |
| **Detection zone** | | | |
| Sensing range | [mm] | 35 | |
| Real sensing range Sr | [mm] | 35 ± 10 % | |
| Operating distance | [mm] | 0...28.3 | |
| **Accuracy / deviations** | | | |
| Correction factor | | steel: 1 / stainless steel: 1 / brass: 1 / aluminium: 1 / copper: 1 | |
| Hysteresis | [% of Sr] | 1...20 | |
| Switch point drift | [% of Sr] | -10...10 | |
| Correction factor K = 1 | | yes | |
| **Operating conditions** | | | |
| Ambient temperature | [°C] | -25...70 | |
| Protection | | IP 67 | |
| **Tests / approvals** | | | |
| EMC | | EN 61000-4-2 ESD | 8 kV CD / 6 kV AD |
| | | EN 61000-4-3 HF radiated | 10 V/m |
| | | EN 61000-4-4 Burst | 2 kV |
| | | EN 61000-4-5 Surge | 0,5 kV line to line, Ri: 2 Ohm |
| | | EN 61000-4-6 HF conducted | 10 V |
| | | EN 55011 | class B |
| MTTF | [years] | 1161 | |
| UL approval | | Ta | -25...70 °C |
| | | Enclosure type | Type 1 |
| | | power supply | Class 2 |
| | | File number UL | E174191 |
| **Mechanical data** | | | |
| Weight | [g] | 132.5 | |
| Housing | | rectangular | |
| Sensing face | | 5 positions selectable | |
| Mounting | | non-flush mountable | |
| Dimensions | [mm] | 40 x 40 x 54 | |
| Materials | | housing: PA; sensing face: PA black; end cap: PA;<br>clamp: orange; screw: stainless steel (1.4567 / 304Cu) | |
| **Displays / operating elements** | | | |
| Display | | switching status | 1 x LED, yellow |
| | | operation | 1 x LED, green |
| **Remarks** | | | |
| Pack quantity | | 1 pcs. | |

# IM5130

## Inductive sensor

**IMC3035-BPKG/K1/US-100-DPS**

### Electrical connection - plug

Connector: 1 x M12; coding: A; Locking: locking, rotatable, stainless steel (1.4404 / 316L)

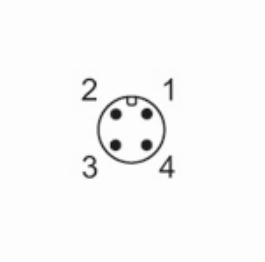


### Connection

