Distinctive features

Low profile
- The lowest case available in 2, 4, 6 and 8 pole versions
- Reduction of the shadow effect in IR soldering
- 30 % reduction of component volume

Two versions
Surface mount models
- Designed for reflow soldering
- UL 94-V0 high temperature materials
- Tin plated terminals

Through-hole models
- Same thermal specifications as SMT models, allowing mixed soldering process

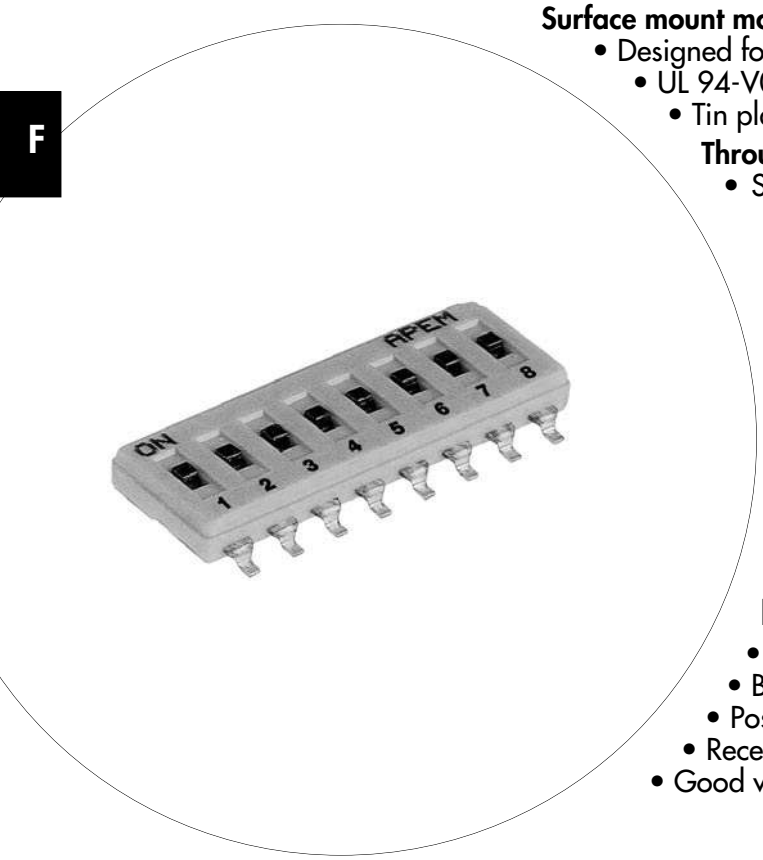

Washable by construction
- Moulded-in terminals
- Ultrasonic-welded case
- Two slots on case corners allowing removal of protection tape

Reliable contacts
- Anti-crush system on moving contact
- Bifurcated self-cleaning sliding contacts
- Positive detent actuation
- Recessed slide actuators preventing accidental actuation
- Good visibility of actuators : black slide on clear background

Two types of packaging
Surface mount models
- Tape and reel (1.000 pieces per reel) - IC tubes

Through-hole models
- IC tubes

IK SERIES
SURFACE MOUNT DIP SWITCHES

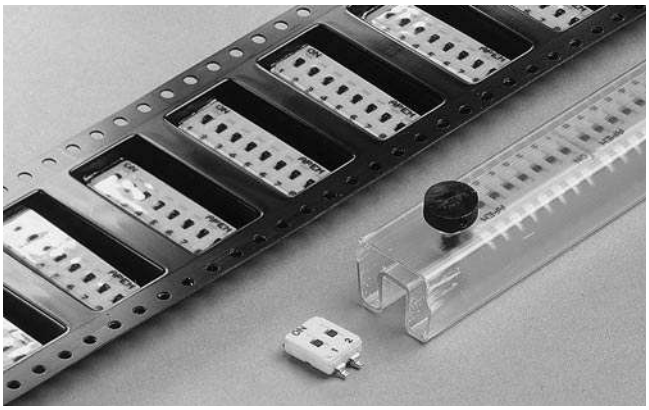

- **Very low profile : 2,85 mm (.112)**
- **Self-cleaning wiping contacts**
- **Recessed actuator with positive detent**
- **Tin plated terminals**
- **Process compatible - withstand IR and vapor phase reflow soldering**
- **Washable**

Tape & reel	IC tubes	No pos.	Dimension "A"
IKN0204000	**IKN0203000**	2	6 (.236)
IKN0404000	**IKN0403000**	4	11.10 (.437)
IKN0604000	**IKN0603000**	6	16.20 (.637)
IKN0804000	**IKN0803000**	8	21.30 (.838)

All switches are supplied in "ON" position.
Other models (3, 5 and 7 positions) : on request

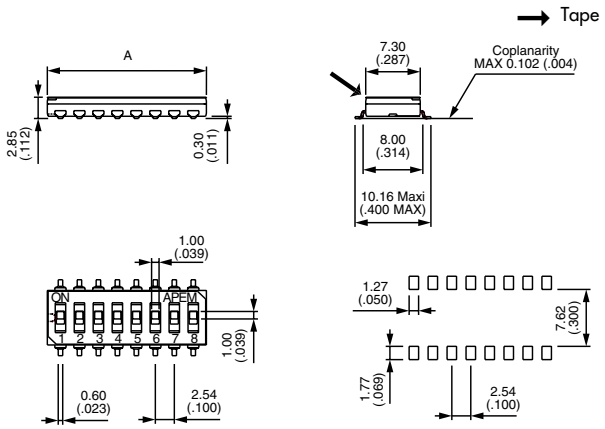

PACKAGING

Unrolling direction →

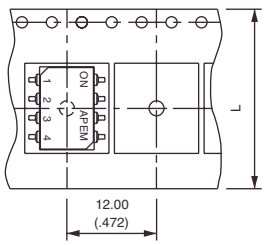

Pos.	Tape dim. "L"	Reel dim. "A"
2	16 (.629)	16.40 (.646)
4	24 (.944)	24.40 (.960)
6	24 (.944)	24.40 (.960)
8	32 (1.259)	32.40 (1.275)

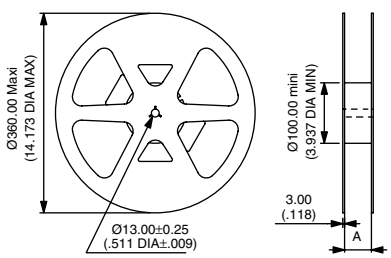

SPECIFICATIONS

- Max. current/voltage rating :
  - switching : 100mA 24VDC
  - non-switching : 100mA 48VDC
- Contact resistance :
  - initial : 30 mΩ max.
  - after 2.000 cycles : 100 mΩ max.
- Insulation resistance : 1.000 MΩ min. at 500VDC
- Dielectric strength : 500 VAC min.
- Electrical life : 2.000 cycles
- Travel : 0,67 mm (.026)
- Operating temperature : -40°C to +100°C
- Storage temperature : -40°C to +125°C

MATERIALS

- Case and actuator : UL 94-V0 thermoplastic
- Stationary contact : bronze, gold plated over nickel barrier
- Moving contact : beryllium copper, gold plated
- Terminals : tin plated over nickel barrier
- Protection tape : polyimide

Antistatic packaging - Standard packaging units :
- Reels of 1.000 pieces

Tape meeting international standard IEC - Publication 286-3 (EIA481A)
Start leader : 400 mm min. - End leader : 160 mm
- IC tubes : see next page.

IK SERIES
THROUGH-HOLE DIP SWITCHES

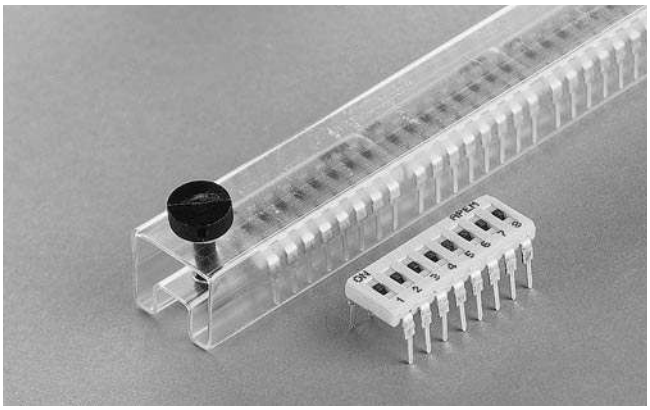

- **Low profile : 4 mm (.156)**
- **Self-cleaning wiping contacts**
- **Recessed actuator with positive detent**
- **Tin plated terminals**
- **Wave solderable**
- **Washable**

F

Model No	No pos.	Dimension "A"
IKN0200000	2	6 (.236)
IKN0400000	4	11.10 (.437)
IKN0600000	6	16.20 (.637)
IKN0800000	8	21.30 (.838)

All switches are supplied in "ON" position.
Other models (3, 5 and 7 positions) : on request

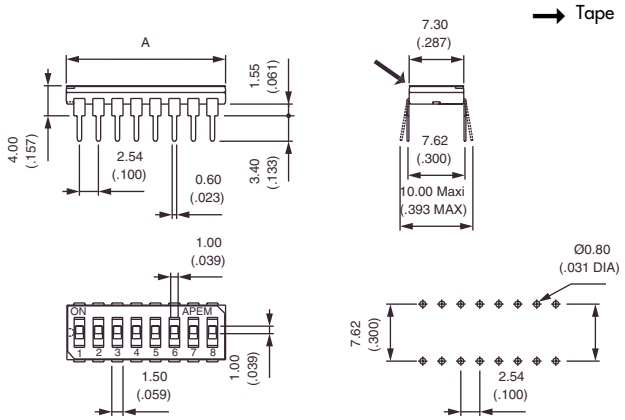

PACKAGING

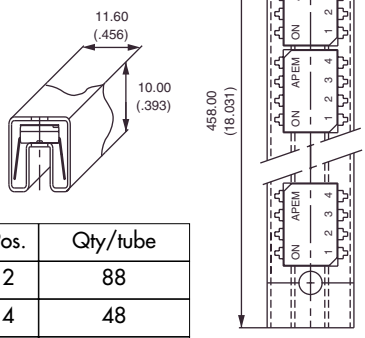

Pos.	Qty/tube
2	88
4	48
6	33
8	25

IC TUBES

SPECIFICATIONS

- Max. current/voltage rating :
  - switching : 100mA 24VDC
  - non-switching : 100mA 48VDC
- Contact resistance :
  - initial: 30 mΩ max.
  - after 2.000 cycles : 100 mΩ max.
- Insulation resistance : 1.000 MΩ min. at 500VDC
- Dielectric strength : 500 VAC min.
- Electrical life : 2.000 cycles
- Travel : 0,67 mm (.026)
- Operating temperature : -40°C to +100°C
- Storage temperature : -55°C to +125°C

MATERIALS

- Case and actuator : UL 94-V0 thermoplastic
- Stationary contact : bronze, gold plated over nickel barrier
- Moving contact : beryllium copper, gold plated
- Terminals : tin plated over nickel barrier
- Protection tape : polyimide

Dimensions : first dimensions are in mm while inches are shown as bracketted numbers.