Brand of NTN corporation

Technical data

UKF207H

Bearing units



Grey cast housing, radial insert ball bearing with adapter sleeve,seal with slinger

KIT CONTENT

UK207G2H, F207

VISUAL (S)

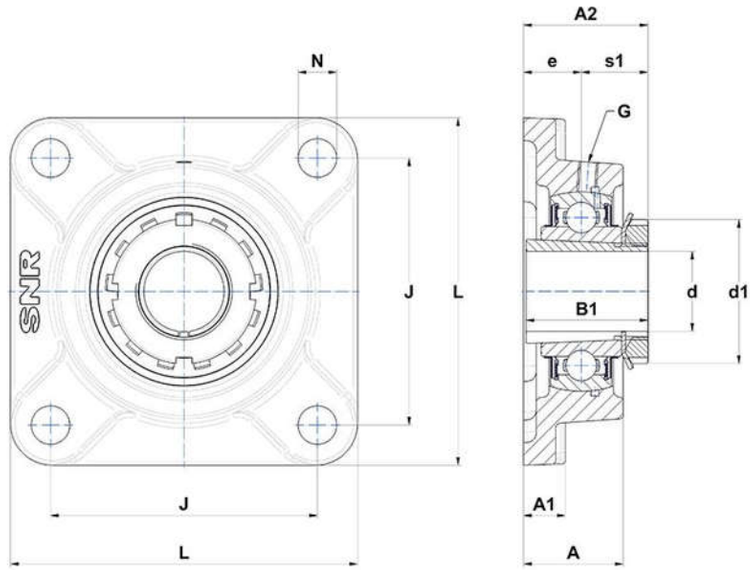

PRODUCT DEFINITION

Brand	SNR
A - Housing height	34 mm
A1 - Housing foot height / flange height	15 mm
A2 - Total height from mounting surface	41,5 mm
B - Width of Inner Ring	27 mm
B1 - Overall width Inner Ring	43 mm

PRODUCT DEFINITION	
d - Shaft diameter	30 mm
d1 - Outer dia of eccent. Lock. collar / nut of adapter sleeve	52 mm
e - Distance mounting surface to bearing center	19 mm
G - Grease fitting	M6x1
J - Mounting holes distance	92 mm
L - Housing width / diameter	117 mm
N - Mounting hole dimension	14 mm
s1 - Distance nut to middle of bearing raceway	22,5 mm

PRODUCT PERFORMANCE	
C - Dynamic load rating	25700000 mN
C0 - Static load rating	15200000 mN
Operating temperature min.	253,15 °K
Operating temperature max.	373,15 °K

OTHER FEATURES	
Mass	1,57 kg
Adapter sleeve designation	H2307