Profile cylinder ISO 15552, PRA series

R480079499

AVENTICS Series PRA Profile cylinders (ISO 15552)

The AVENTICS Series PRA (ISO 15552) cylinders have a compact design profile with integrated sensor slots. The Series PRA (ISO 15552) cylinders can be used for all industries. This includes general automation technology, machine and systems construction, as well as specific industry applications.



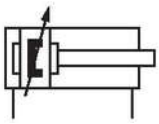

Technical data

Industry	Industrial
Standards	ISO 15552
Piston Ø	125 mm
Stroke	100 mm
Ports	G 1/2
Functional principle	Double-acting
Cushioning	Pneumatic adjustable cushioning
Magnetic piston	Piston with magnet
Environmental requirements	Industry standard ATEX optional
Piston rod thread - type	External thread
Piston rod thread	M27x2
Piston rod	single
Scraper	Standard Industry Scraper
Pressure for determining piston forces	6,3 bar
Retracting piston force	7220 N
Extracting piston force	7725 N
Min. ambient temperature	-20 °C
Max. ambient temperature	80 °C
Min. working pressure	1.5 bar

Max. working pressure	10 bar
Cushioning length	22 mm
Cushioning energy	140 J
Weight 0 mm stroke	6.72 kg
Weight +10 mm stroke	0.15 kg
Stroke max.	2750 mm
Medium	Compressed air
Min. medium temperature	-20 °C
Max. medium temperature	80 °C
Max. particle size	50 µm
Min. oil content of compressed air	0 mg/m³
Max. oil content of compressed air	5 mg/m³

Material

Piston rod	Stainless Steel
Scraper material	Polyurethane
Seal material	Polyurethane
Material, front cover	Die-cast aluminum
Cylinder tube	Aluminum
End cover	Die-cast aluminum
Nut for piston rod	Steel, chrome-plated
Part No.	R480079499

Technical information

ATEX-certified cylinders with identification II 2G Ex h IIC T4 Gb / II 2D Ex h IIIC T135°C Db_X can be generated in the Internet configurator.

The operating temperature range for ATEX-certified cylinders is -20°C ... 60°C.

The pressure dew point must be at least 15 °C less than ambient and medium temperature and may not exceed 3 °C.

The oil content of compressed air must remain constant during the life cycle.

Use only the approved oils from AVENTICS. Further information can be found in the “Technical information” document (available in https://www.emerson.com/en-us/support).

Profile cylinder ISO 15552, PRA series

R480079499

Dimensions

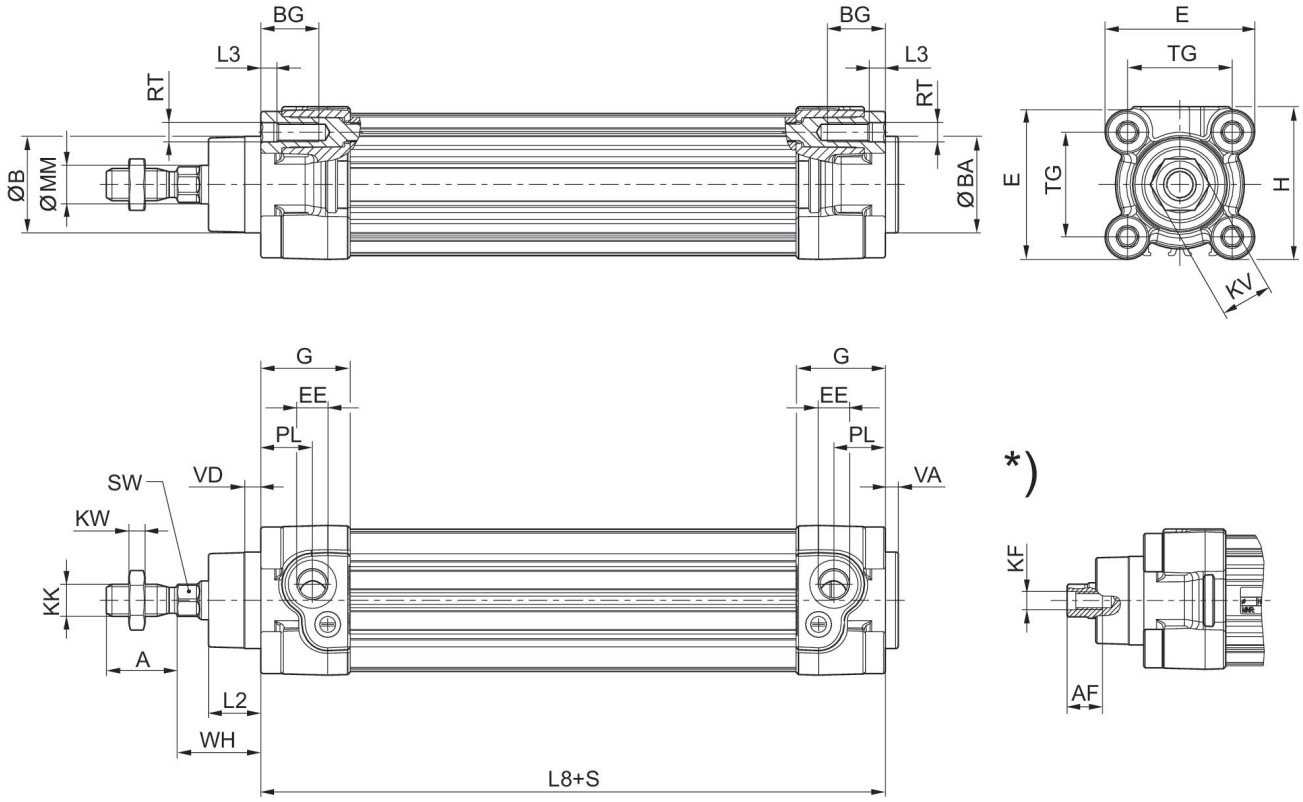

S = stroke

*) For cylinders with optional piston road with internal thread

Piston Ø	A -2	AF+1	ØB d11	ØBA d11	BG min.	E	EE	G	H
32	22	12	30	30	16	46.5	G 1/8	27.75	47.5
40	24	13.5	35	35	16	53	G 1/4	33.25	53
50	32	17	40	40	16	65	G 1/4	31	65
63	32	17	45	45	16	75	G 3/8	38.25	75
80	40	21	45	45	17	95	G 3/8	38.25	95
100	40	21	55	55	17	115	G 1/2	42.25	115
125	54	28	60	60	20	140	G 1/2	53.85	140

Piston Ø	KF	KK	KV	KW	ØMM f8	PL	L2	L3 ±0,5	L8
32	M6	M10x1,25	16	5	12	16	16.25	4.5	94±0,4
40	M8	M12x1,25	18	6	16	20	18.25	4.5	105±0,7
50	M10	M16x1,5	24	8	20	19	25	4.5	106±0,7
63	M10	M16x1,5	24	8	20	24	25	4.5	121±0,8
80	M12	M20x1,5	30	10	25	23.5	33	0	128±0,8
100	M12	M20x1,5	30	10	25	25	36	0	138±1
125	M16	M27x2	41	13.5	32	33	45	0	160±1

Piston Ø	RT	SW	TG	VA -1	VD	WH
32	M6	10	32,5±0,5	4	5	26±1,4

Profile cylinder ISO 15552, PRA series

R480079499

Piston Ø	RT	SW	TG	VA -1	VD	WH
40	M6	13	38±0,5	4	5	30±1,4
50	M8	17	46,5±0,6	4	5	37±1,4
63	M8	17	56,5±0,7	4	5	37±1,8
80	M10	22	72±0,7	4	5	46±1,8
100	M10	22	89±0,7	4	5	51±1,8
125	M12	27	110±1,1	6	7	65±2,2

Cushioning diagram

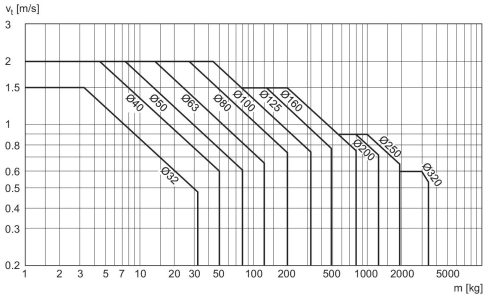

v_t = Piston velocity [m/s] m = Cushionable mass [kg]

Profile cylinder ISO 15552, PRA series

R480079499

