Part Number: **BU-25/BU-25C**
Description: **Automotive Clip**

4106

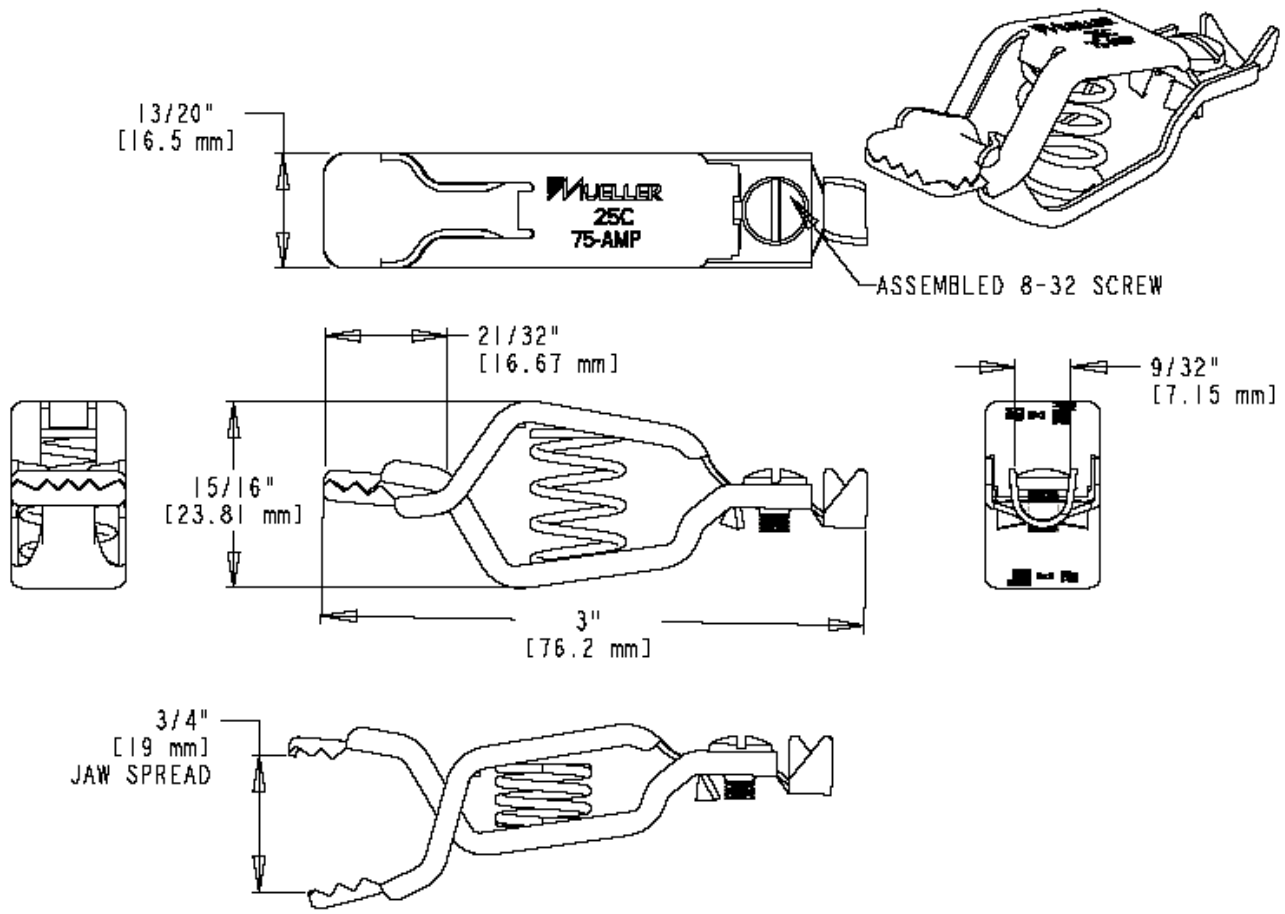

- Automotive clip
- Teeth mesh on three sides of jaw
- Can be attached by crimp or screw connection
- Material: BU-25 -- zinc-plated steel
  BU-25C -- solid copper
- Rating:
  - 40 Amps – BU-25
  - 75 Amps – BU-25C
- Use BU-26 PVC insulator for this clip
- Packaged in Bulk
- RoHS Compliant

Mueller Electric Company
1625 E. 31st Street
Cleveland, Ohio 44114

ISO 9001:2000
Over 95 Years Of Innovation
www.muellerelectric.com

TEL. 800-955-2629
TEL. 216-771-5225
FAX. 216-771-3068