Technical Data
Foot-switch

Series F1 UN

Description **F1-ZSD UN** Article number **6061000558**

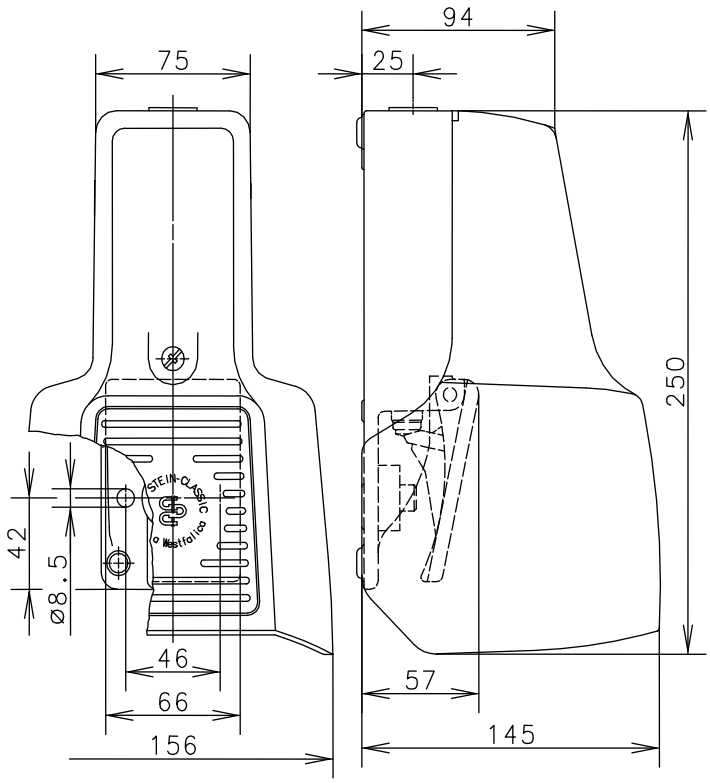

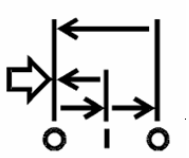

Switching symbol
(Three-Step-Safety Switch)

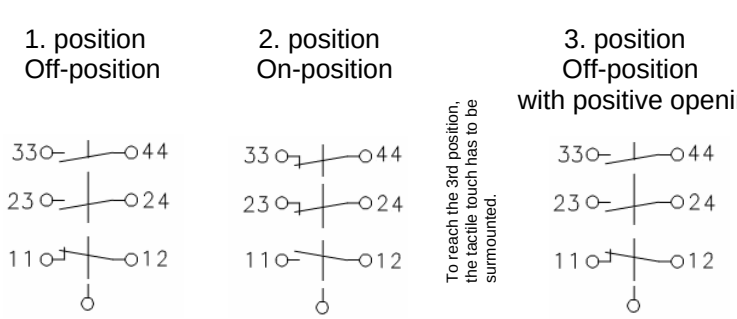

Operating diagramme

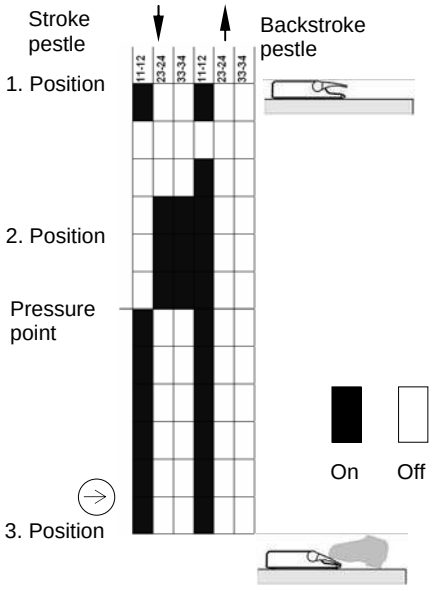

This document will not become the contractual basis; the details included herein do not constitute any descriptions of expected conditions, so that warranties/claims for defects on account of possible variations of the actual qualities from the qualities described herein are explicitly excluded. All rights reserved. Specifications subject to change without notice!

Technical Data
Foot-switch

Electrical data		
Rated insulation voltage	U_i	250 V
Conv. thermal current	I_{the}	5 A
Rated impulse withstand voltage	Uimp	2,5 KV
Rated operational voltage	U_e	240 V AC and 24 V DC
Utilization category		AC-15, U_e /I_e 240 V AC / 1,5 A 50-60 Hz DC-13, U_e /I_e 24 V DC/ 1,0 A
Direct opening action	⊖	acc. to IEC/EN 60947-5-1, Annex K
Short-circuit protective device		D-Fuse 4 A gG
Protection class		I
Mechanical data		
Enclosure		AL, die-cast
Protective guard (Accident protection cover UN)		AL, die-cast
Actuator		Foot lever (PA)
Ambient air temperature		Operating temperature range: -10 °C to +50 °C Storage temperature range: -25 °C to +70 °C
Contact type		1 NC, 2 NO. (Zb)
Operating force (pedal centre)	1. position	10 N
	2. position	25 N
Pressure point		≈ 200 N
Mechanical life		
Sequence of the switching position:	1 – 2 – 1	10 x 10^6 operating cycles
or:	1 – 2 – 3 – 1	1 x 10^6 operating cycles
Switching frequency		max. 30/min
Assembly		2 x M8
Connection		6 screw connections (M3,5) with square clamps
Protection ground		2 x M4
Conductor cross-sections		Solid: 0.5 ... 1.5 mm²
		Litz wire with ferrules: 0.5 ... 1.5 mm²
Cable entrance		1 x M20 x 1,5
Weight		Approx. 1,6 kg
Protection type		IP67 in accordance with IEC/EN 60529
ID for safety engineering		
B10d - value		1 x 10^5
Regulations		
		VDE 0660 T100, DIN EN 60947-1, IEC 60947-1
		VDE 0660 T200, DIN EN 60947-5-1, IEC 60947-5-1
		DIN EN 61326-3-1
		EN 13849
EU Conformity		acc. to directive 2006/95/EG
Approvals		$_cUL_{us}$

This document will not become the contractual basis; the details included herein do not constitute any descriptions of expected conditions, so that warranties/claims for defects on account of possible variations of the actual qualities from the qualities described herein are explicitly excluded. All rights reserved. Specifications subject to change without notice!

Function

Normally open contacts: 23 – 24, 33 – 44; Signalling contact: 11 – 12

- Position 1: OFF position of the operating contacts (the pedal is not actuated)
- Position 2: ON position of the operating contacts (the pedal is actuated to as far as the pressure point)
- Position 3: OFF position of the operating contacts (the pedal is fully actuated)

If the three-stage enable switch is actuated in position 2, it returns to position 1 when it is released. The three-stage enable switch changes from position 2 to position 3, if it gets further pressed unter after the resistance of the pressure point.
The actuation of the operating contacts is made by a positive opening.
Once the pedal is not pressed, the three-stage enable switch returns to position 1.
The operating contacts are opened in the return stroke.

Notes

The specified protection classification (IP code) applies only when the cover is closed and the appropriate cable is used, in accordance with the clamping range of the above mentioned cable gland.

This document will not become the contractual basis; the details included herein do not constitute any descriptions of expected conditions, so that warranties/claims for defects on account of possible variations of the actual qualities from the qualities described herein are explicitly excluded. All rights reserved. Specifications subject to change without notice!