THE INFORMATION CONTAINED IN THIS DRAWING IS THE SOLE PROPERTY OF L-COM, INC. ANY REPRODUCTION IN PART OR WHOLE WITHOUT THE WRITTEN PERMISSION OF L-COM, INC. IS PROHIBITED.

REVISIONS			
REV	DESCRIPTION	DATE	APPROVED
A	INITIAL RELEASE	07/24/06	MCCORMICK
B	ECN 5704: REMOVE WASHER, REVISE ALL NOTES, NEW FORMAT	9/8/11	D.FRISIELLO

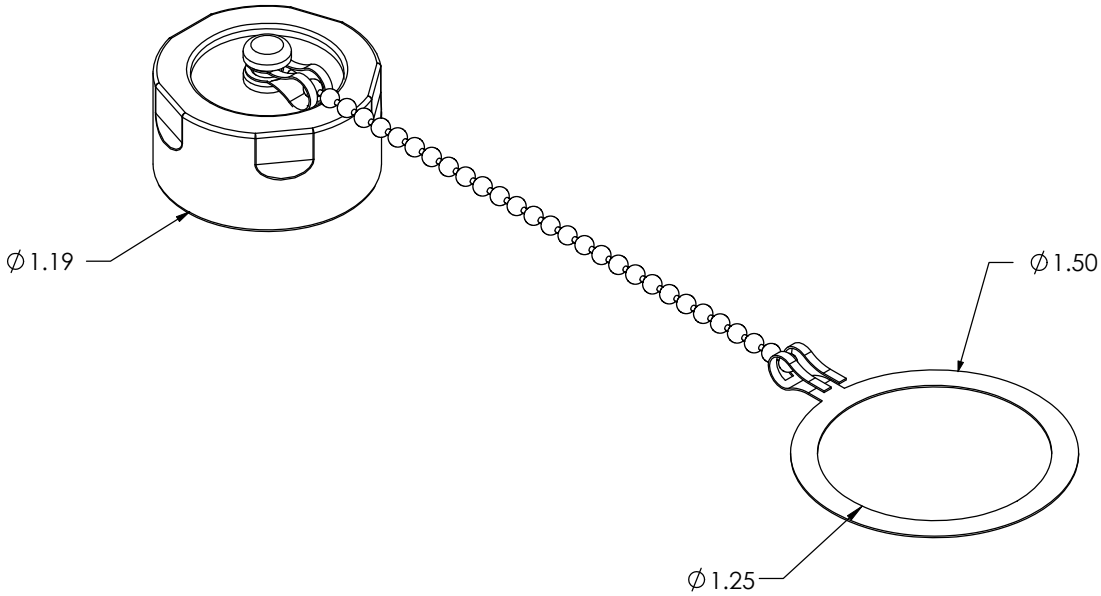

B

NOTES:

MATERIAL:
CAP: GLASS FILLED PBT
CHAIN AND RING: STAINLESS STEEL.

CHAIN LENGTH: APPROX. 6"

ALL DIMENSIONS ARE FOR REFERENCE ONLY.

COMPONENT ASSEMBLY SHALL BE INDIVIDUALLY PACKAGED IN ACCORDANCE WITH L-COM SPECIFICATION PS-0031.

B

UNLESS OTHERWISE SPECIFIED,
DIMENSIONS ARE IN INCHES [mm]
OVERALL CABLE LENGTH TOLERANCE:
≤12 [305] = +1 [25] / -0
>12 [305] ≤60 [1524] = +2 [51] / -0
>60 [1524] ≤120 [3048] = +4 [102] / -0
>120 [3048] ≤300 [7620] = +6 [152] / -0
>300 [7620] = +5% / -0%
ALL OTHER DIMENSIONAL TOLERANCES:
.X = ± .2
.XX = ± .02
.XXX = ±.005

PROJECTION

APPROVALS		DATE
DRAWN BY	C.MCCORMICK	07/24/2006
CHECKED BY	D.PARHAM	07/24/2006
APPROVED BY	P.MCNIEL	07/24/2006

CONFIGURATION DETAILS OF UNDIMENSIONED FEATURES MAY VARY

COLOR VARIATIONS MAY OCCUR

L-COM Global Connectivity
45 BEECHWOOD DRIVE
NORTH ANDOVER, MA
01845

CATEGORY
FIBER OPTICS

PRODUCT DESCRIPTION
IP67 IND OUTLET CAP w/CHAIN

SIZE	FSCM NO.	DWG. NO.	REV.
A	43321	X-CAP	B

SCALE: NONE | CAD FILE: X-CAP.SLDDRW | SHEET 1 OF 1