Tapered roller bearings, single row

Principal dimensions			Basic load ratings		Speed ratings		Designation
			dynamic	static	Reference speed	Limiting speed	
d	D	T	C	C0			* SKF Explorer bearing
mm			kN		r/min		-
44,45	88,9	30,162	95,2	127	5600	8000	HM 803149/2/110/2/QCL7C

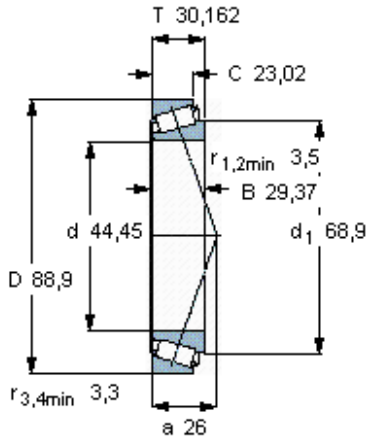

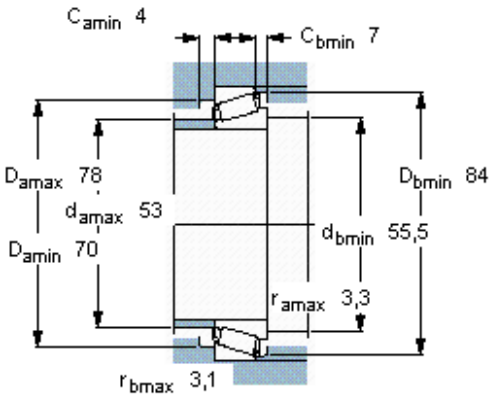

Calculation factors

e 0,54

Y 1,1

Y_0 0,6