

4-pole contactor,20A/AC-1,AC-operated

Part no. DILMP20(400V50HZ,440V60HZ)

Article no. 276972

Program

Product range			Contactors
Application			Contactors for 4 pole electric consumers
Subrange			Contactors up to 200 A, 4 pole
Connection technique			Screw terminals
Pole			4 pole
Rated operational current			
AC-1			
Conventional free air thermal current, 3 pole, 50 - 60 Hz			
at 40 °C	$I_{th} = I_e$	A	22
at 50 °C	$I_{th} = I_e$	A	21
at 60 °C	$I_{th} = I_e$	A	20
Contact sequence			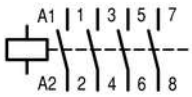
For use with			DILM32-XHI(C)… DILA-XHI(V)(C)…
Voltage AC/DC			AC operation

InstructionsContacts to EN 50012.

Approbationen

Product Standards	IEC/EN 60947-4-1; UL 508; CSA-C22.2 No. 14-05; CE marking
UL File No.	E29096
UL CCN	NLDX
CSA File No.	012528
CSA Class No.	2411-03, 3211-04
NA Certification	UL listed, CSA certified
Specially designed for NA	No

General

Standards			IEC/EN 60947, VDE 0660, UL, CSA
Lifespan, mechanical			
AC operated	Operations	x 10^6	10
DC operated	Operations	x 10^6	10
Operating frequency, mechanical			
AC operated	Operations/h		5000
DC operated	Operations/h		5000
Climatic proofing			Damp heat, constant to IEC 60068-2-3 Damp heat, cyclic to IEC 60068-2-30
Ambient temperature		°C	
Open		°C	- 25 - 60
Enclosed		°C	- 25 - 40
Storage		°C	- 40 - 80
Mounting position, AC- and DC operated			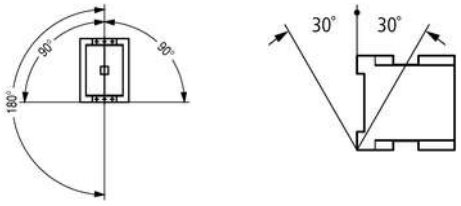
Mechanical shock resistance (IEC/EN 60068-2-27)			

Half-sinusoidal shock, 10 ms			
Main contacts			
N/O contact		g	10
Auxiliary contacts			
N/O contact		g	7
N/C contact		g	5
Protection type			IP20
Protection against direct contact when actuated from front (EN 90274)			Finger- and back-of-hand proof
Terminal capacity main cable			
Solid		mm^2	1 x (0.75 - 4) 2 x (0.75 - 2.5)
Flexible with ferrule		mm^2	1 x (0.75 - 2.5) 2 x (0.75 - 2.5)
Solid or stranded		AWG	18 - 14
Terminal capacity control circuit cables			
Solid		mm^2	1 x (0.75 - 4) 2 x (0.75 - 2.5)
Flexible with ferrule		mm^2	1 x (0.75 - 2.5) 2 x (0.75 - 2.5)
Solid or stranded		AWG	18 - 14
Main cable connection screw/bolt			M3.5
Tightening torque		Nm	1.2
Control circuit cable connection screw/bolt			M3.5
Tightening torque		Nm	1.2
Tool			
Main cable			
Pozidriv screwdriver		Size	2
Standard screwdriver		mm	0.8 x 5.5 1 x 6
Control circuit cables			
Pozidriv screwdriver		Size	2
Standard screwdriver		mm	0.8 x 5.5 1 x 6

Main conducting paths

Rated impulse withstand voltage	U_{imp}	V AC	8000
Overvoltage category/pollution degree			III/3
Rated insulation voltage	U_i	V AC	690
Rated operational voltage	U_e	V AC	690
Safe isolation to VDE 0106 Part 101 and Part 101/A1			
between coil and contacts		V AC	400
between the contacts		V AC	400
Making capacity (p.f. to IEC/EN 60947)			
	Up to 690 V	A	144
Breaking capacity			
220/230 V		A	120
380/400 V		A	120
500 V		A	100
660/690 V		A	70
Short-circuit rating			
Short-circuit protection maximum fuse			
Type “2” coordination			
400 V	gG/gL 500 V	A	20
690 V	gG/gL 690 V	A	20

Type “1” coordination			
400 V	gG/gL 500 V	A	35
690 V	gG/gL 690 V	A	25

AC

AC-1 duty			
Rated operational current			
Conventional free air thermal current, 3 pole, 50 - 60 Hz			
Open			
at 40 °C	$I_{th} = I_e$	A	22
at 50 °C	$I_{th} = I_e$	A	21
at 60 °C	$I_{th} = I_e$	A	20
enclosed	I_{th}	A	18
Conventional free air thermal current, 1 pole			
open	I_{th}	A	60
enclosed	I_{th}	A	54
Motor rating	P	kWh	
Motor rating AC-1 230 V		kW	8
Motor rating AC-1 240 V		kW	9
Motor rating AC-1 380/400 V		kW	14
Motor rating AC-1 415 V		kW	15
Motor rating AC-1 440 V		kW	16
Motor rating AC-1 500 V		kW	18
Motor rating AC-1 690 V		kW	24
AC-3 duty			
Rated operational current AC-3 open, 50 - 60 Hz, 3 pole	I_e		
220/230 V	I_e	A	12
240 V	I_e	A	12
380/400 V	I_e	A	12
415 V	I_e	A	12
440V	I_e	A	12
500 V	I_e	A	10
660/690 V	I_e	A	7
Motor rating	P	kWh	
220/230 V	P	kW	3.5
240V	P	kW	4
380/400 V	P	kW	5.5
415 V	P	kW	7
440 V	P	kW	7.5
500 V	P	kW	7
660/690 V	P	kW	6.5

DC

Rated operational current, open			
DC-1 operation			
60 V	I_e	A	22
110 V	I_e	A	22
220 V	I_e	A	6
440 V	I_e	A	1.3
DC-3 operation			
60 V	I_e	A	20
110 V	I_e	A	20
220 V	I_e	A	1.5
440 V	I_e	A	0.2
DC-5 operation			

60 V	I_e	A	20
110 V	I_e	A	20
220 V	I_e	A	1.5
440 V	I_e	A	0.2

Current heat loss (3 pole)

Current heat loss at I_{th}		W	4.7
Impedance per pole		mΩ	2.5

Magnet systems

Voltage tolerance		x U_c	
AC operated 50 Hz	Pick-up	x U_c	0.8 - 1.1
AC operated 50/60 Hz		x U_c	0.8 - 1.1
Drop-out voltage AC operated	Drop-out	x U_c	0.4 - 0.6
DC operated	Pick-up	x U_c	0.8 - 1.1
DC operated	Drop-out	x U_c	0.2 - 0.6
Power consumption of the coil in a cold state and 1.0 x U_c			
AC operated 50/60 Hz	Pick-up	VA	24
AC operated 50/60 Hz	Pick-up	W	19
AC operated 50/60 Hz	Sealing	VA	4
AC operated 50/60 Hz	Sealing	W	1.2
DC operated	Pick-up	W	4,5
DC operated	Sealing	W	4,5
Duty factor		% DF	100
Switching times at 100 % U_c (approximate values)			
Main contacts			
AC operated			
Closing delay		ms	15 - 21
Opening delay		ms	9 - 18
DC operated		ms	
Closing delay		ms	31
Opening delay		ms	12
Arcing time		ms	10
Permissible residual current with actuation of A1 - A2 by the electronics (with 0 signal).		mA	≤ 1

Notes

At least double-pulse bridge rectifier

Technical data according to ETIM 4.0

Number of main contacts as N/Os			4
Rated operation current Ie at AC-1, 400 V			22
Connection type main circuit			Screw connection
Rated control voltage Us at AC 60HZ		V	440
Number of auxiliary contacts as N/Os			0
Rated control voltage Us at AC 50HZ		V	400
Number of auxiliary contacts as N/Cs			0
Suitable for rail-mounting			No
Rated control voltage Us at DC		V	0
Voltage type for actuation			AC
Rated operation current Ie at AC-3, 400 V		A	12
Number of N/Cs as main contact			0
Motor rating at AC-3, 400 V		kWh	5.5

Characteristics

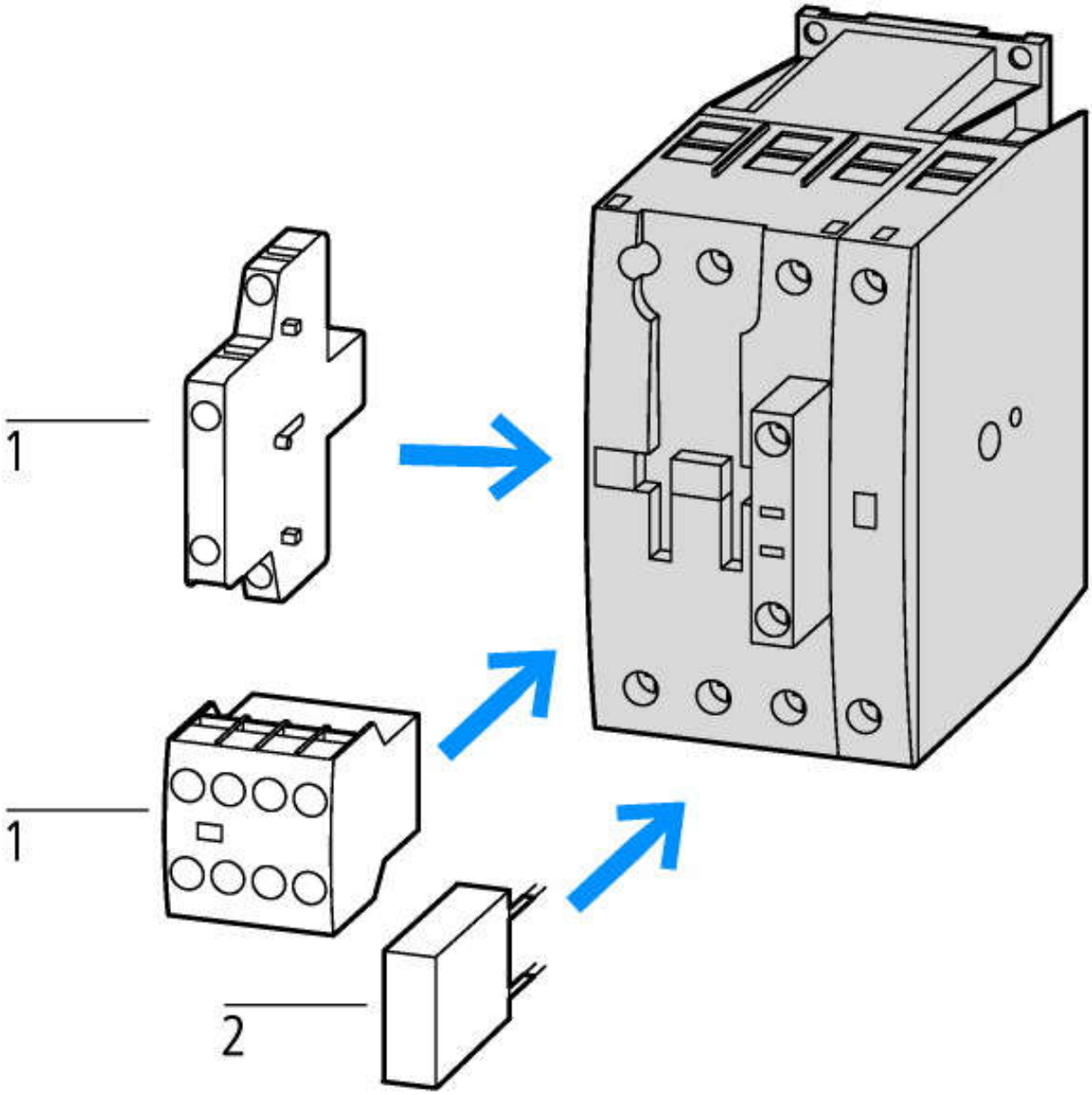

1: Auxiliary contact module
2: Suppressor

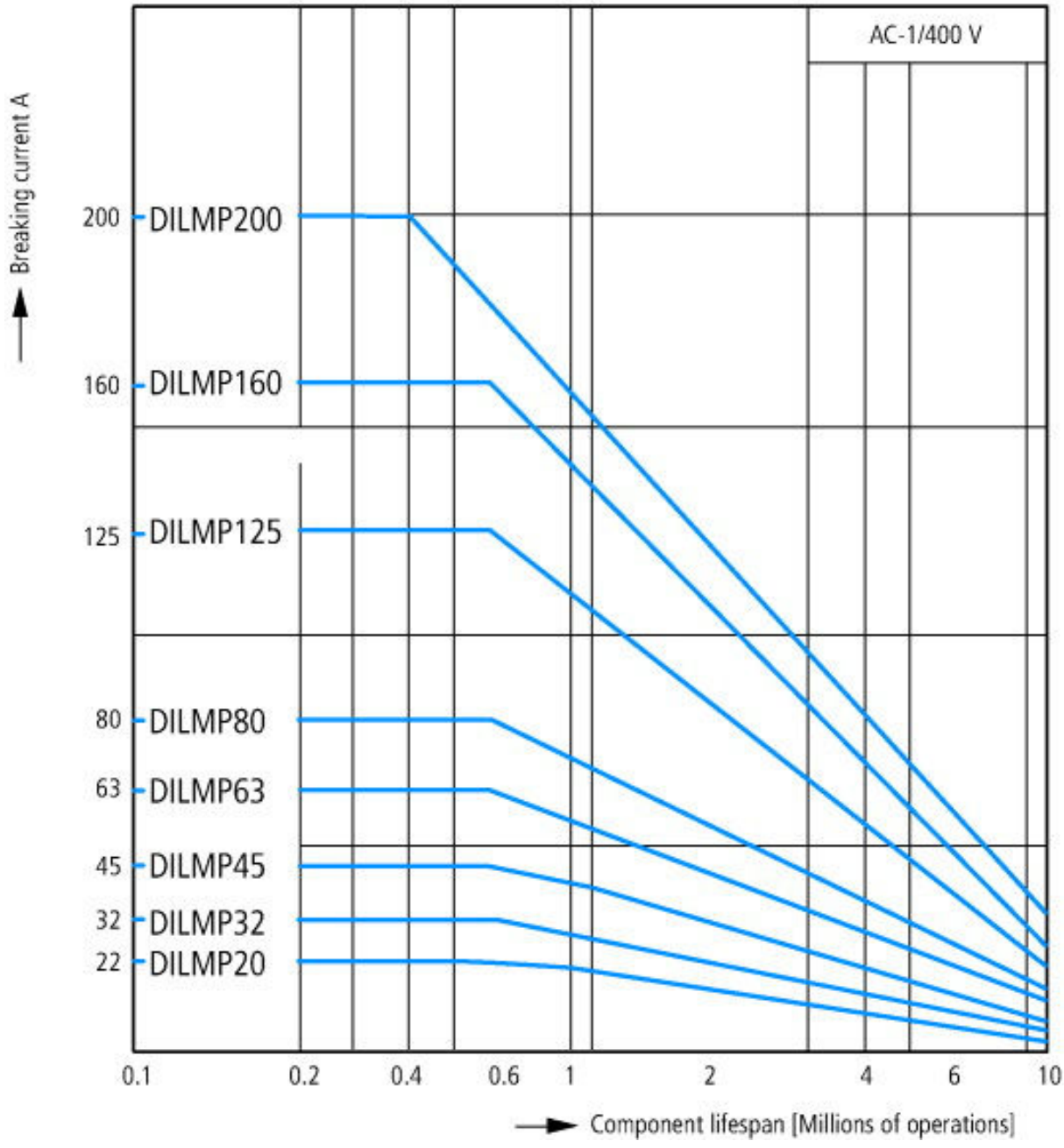

Operating characteristics
Non inductive and slightly inductive loads
Electrical characteristics
Switch on: 1 × rated operational current
Switch off: 1 × rated operational current
Utilization category
100 % AC-1
Typical examples of application
Electric heat

CAD-Data

Product standards CAD data:	http://eaton-moeller.partcommunity.com/PARTcommunity/Portal/eaton-moeller

Dimensions

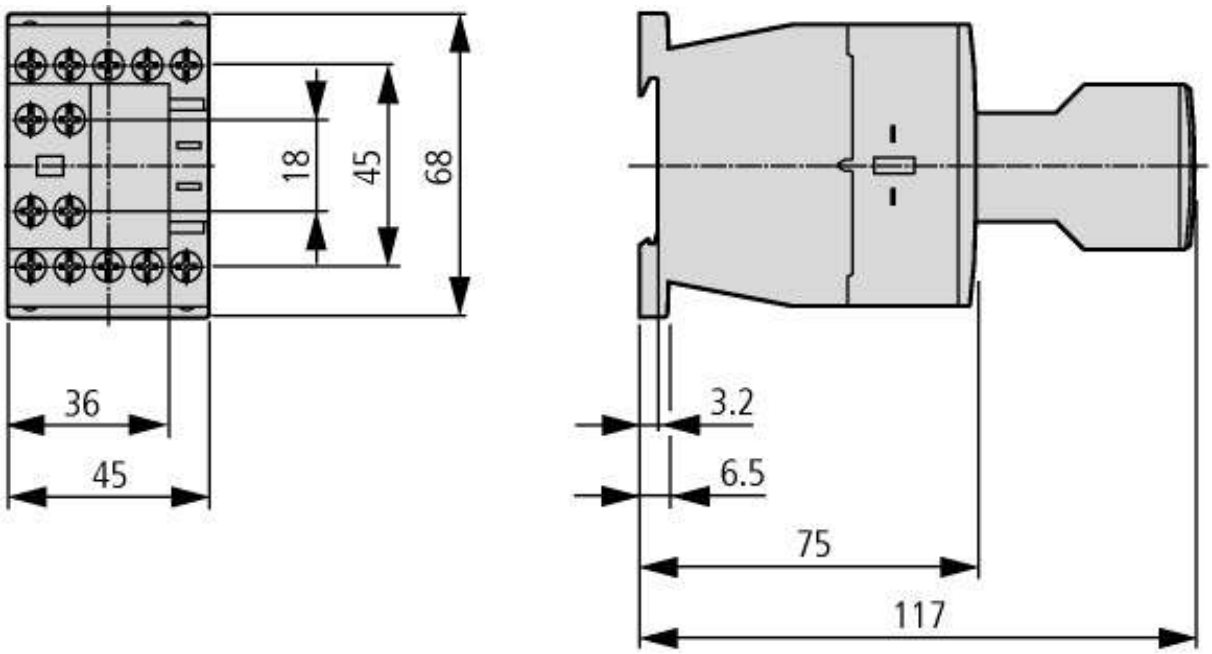

Contactor with auxiliary contact module

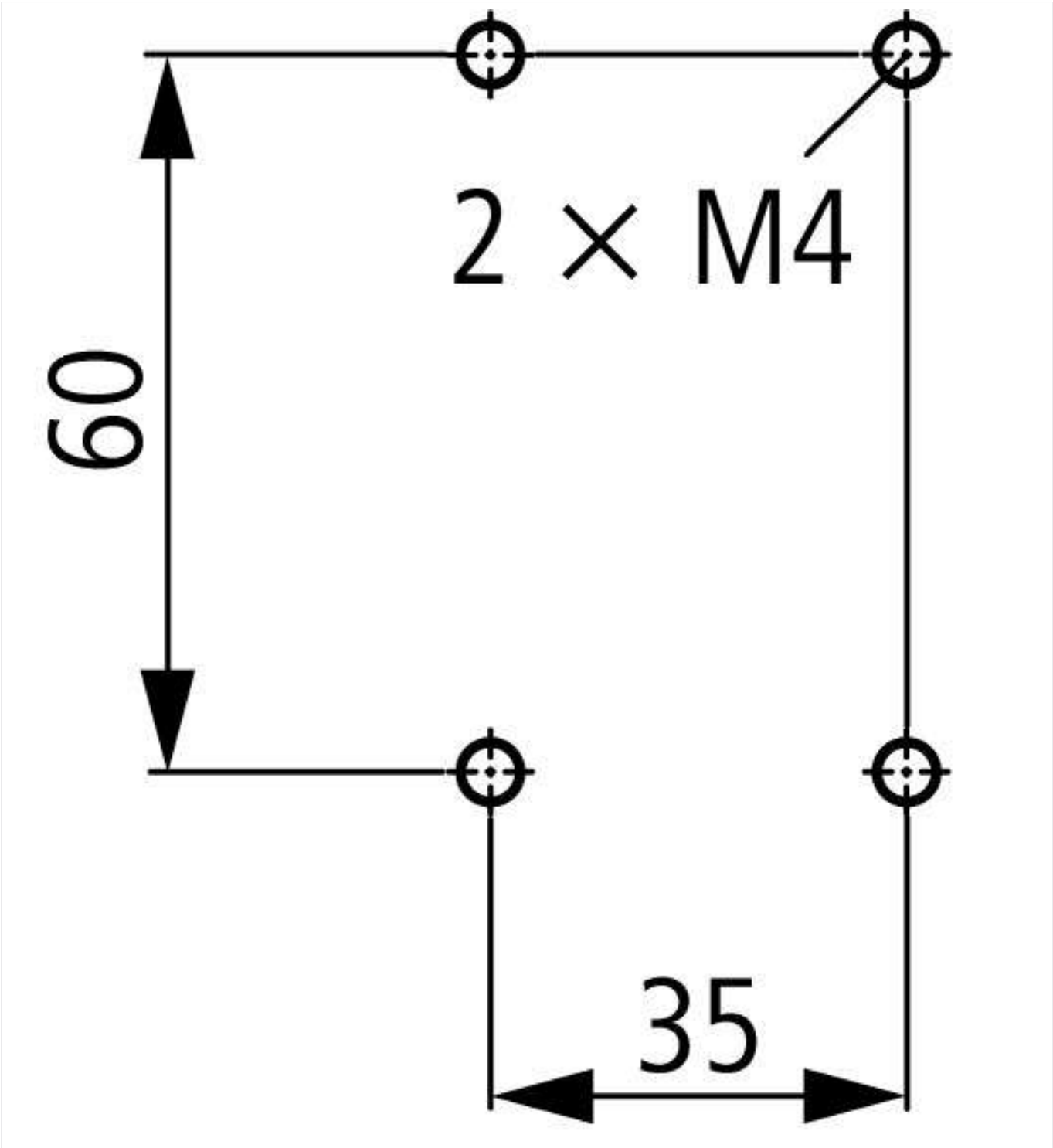

DILMP20

Additional product information (links)

AWA2100-2126 Contactors	ftp://ftp.moeller.net/DOCUMENTATION/AWA_INSTRUCTIONS/21261207.pdf
Installation Instructions	http://www.moeller.net/en/support/instructions_awa.jsp
Documentation	http://www.moeller.net/en/support/index.jsp
Motor starters and "Special Purpose Ratings" for the North American market	http://www.moeller.net/binary/ver_techpapers/ver953en.pdf
Busbar Component Adapters for modern Industrial control panels	http://www.moeller.net/binary/ver_techpapers/ver960en.pdf
The Interaction of Contactors with PLCs	http://www.moeller.net/binary/ver_techpapers/ver957en.pdf
Standard Compliant and Functionally Safe Engineering Design with Mechanical Auxiliary Contacts	http://www.moeller.net/binary/ver_techpapers/ver956en.pdf
Switchgear for Luminaires	http://www.moeller.net/binary/ver_techpapers/ver955en.pdf
Effect of the Cabel Capacitance of Long Control Cables on the Actuation of Contactors	http://www.moeller.net/binary/ver_techpapers/ver949en.pdf
X-Start - Modern Switching Installations Efficiently Fitted and Wired Securely	http://www.moeller.net/binary/ver_techpapers/ver938en.pdf
Mirror Contacts for Highly-Reliable Information Relating to Safety-Related Control Functions	http://www.moeller.net/binary/ver_techpapers/ver944en.pdf

X-Start - New Generation:100 years of Moeler contactors - Continous Progress-	http://www.moeller.net/binary/ver_techpapers/ver937en.pdf
Switchgear of Power Factor Correction Systems	http://www.moeller.net/binary/ver_techpapers/ver934en.pdf

© 07/2011 by Eaton Industries GmbH