DCRG8

Automatic power factor controller, DCRG series, 8 steps, expandable up to 24 steps



Product designation			Automatic power factor controller, 8 relay steps, graphic display
Product type designation			DCRG8
Auxiliary supply			
Rated auxiliary supply voltage Us			
AC			
	min	VAC	100
	Max	VAC	415
DC			
	min	VDC	110
	Max	VDC	250
Auxiliary operating range			90…484VAC / 93.5…300VDC
Auxiliary rated frequency		Hz	50/60 ±10%
Power consumption Max		VA	27 (with 4 EXP modules)
Power dissipation Max		W	10.5 (with 4 EXP modules), 5.5 (with no EXP modules)
Immunity time for microbreakings		ms	≥35ms (110VAC); ≥80ms (220…415VAC)
Voltage inputs			
Rated voltage (Ue)		VAC	600VAC L-L (rated max)
Operating range			50…720VAC L-L (415VAC L-N)
Frequency range		Hz	45…65 Hz / 360…440 Hz
Type of measure			True RMS value
No-voltage release		ms	≥8
Measurement input impedance		kΩ	>1.10MΩ L-L, >0.55MΩ L-N
Type of connection			Single phase, two phase, three phase with or without neutral or balanced three phase system
Current inputs			
Number of current input		Nr.	3

The characteristics described in this document are subject to updates or modifications at any time. The descriptions, technical and functional information, illustrations and instructions in this brochure are purely illustrative, and are consequently not contractually binding

Type of input			Shunt supplied by external current transformer (low voltage). Max 5A
Measurement range			0.025...6A~ for 5A scale; 0.025...1.2A~ for 1A scale
Measurement method			True RMS value
Constant overload		Ie	1.2 Ie
Overload peak		A	50A for 1s
Burden per phase		W	<0.6VA
Measurement data			
Type of voltage and current measurement			True RMS value
Power factor adjustment			0.5ind…0.5cap.
Type of temperature sensor			Internal + PT100 with EXP1004 + NTC with EXP1016
Temperature measurement range		°C	0…+212
Relay outputs			
Number of relay output		Nr.	8 (up to 18 with EXP10 06 - EXP10 07)
Contact arrangement			7 NO-SPST + 1 C/O-SPDT
Rated current			5A 250V AC1
UL/CSA and IEC/EN 60947-5-1 designation			B300
Maximum current at common contact terminal		A	10
Maximum switching voltage		VAC	415
Electrical life (with rated load)		cycles	105
Mechanical life		cycles	30 x 106
Static Outputs			
Number of static output			0 (up to 8 with EXP1001)
Insulations			
Rated insulation voltage Ui IEC/EN		V	600
Rated impulse withstand voltage Uimp		kV	9.5
Operating frequency withstand voltage		kV	5.2
Connections			
Type of terminal			Plug-in, removable
Conductor cross section			
	min	mm²	0.2
	Max	mm²	2.5
	min	AWG	24AWG (18AWG according to UL/CSA)
	Max	AWG	12
Tightening torque (Max)			
		Nm	0.56
		lbin	5lbin (4-5lbin according to UL/CSA)

The characteristics described in this document are subject to updates or modifications at any time. The descriptions, technical and functional information, illustrations and instructions in this brochure are purely illustrative, and are consequently not contractually binding

DCRG8

Automatic power factor controller, DCRG series, 8 steps, expandable up to 24 steps

Ambient conditions

Temperature			
	Operating temperature		
	min	°C	-20
	max	°C	+70
	Storage temperature		
	min	°C	-30
	max	°C	+80
Relative humidity		%	<80%
Maximum Pollution degree			2
Overvoltage category			3
Measurement category			III
Climatic sequence			Z/ABDM (IEC/EN 60068-2-61)
Shock resistance			15g (IEC/EN 60068-2-27)
Vibration resistance			0.7g (IEC/EN 60068-2-6)

Housing

Execution		Flush mount
Material		Polycarbonate
Mounting		Flush-mount 144x144mm (5.67x5.67”)
Degree of protection		IP65 on front, IP20 terminals
Dimensions (W x H x D)	mm	144 x 144 x 53.2
Weight	g	980

Dimensions

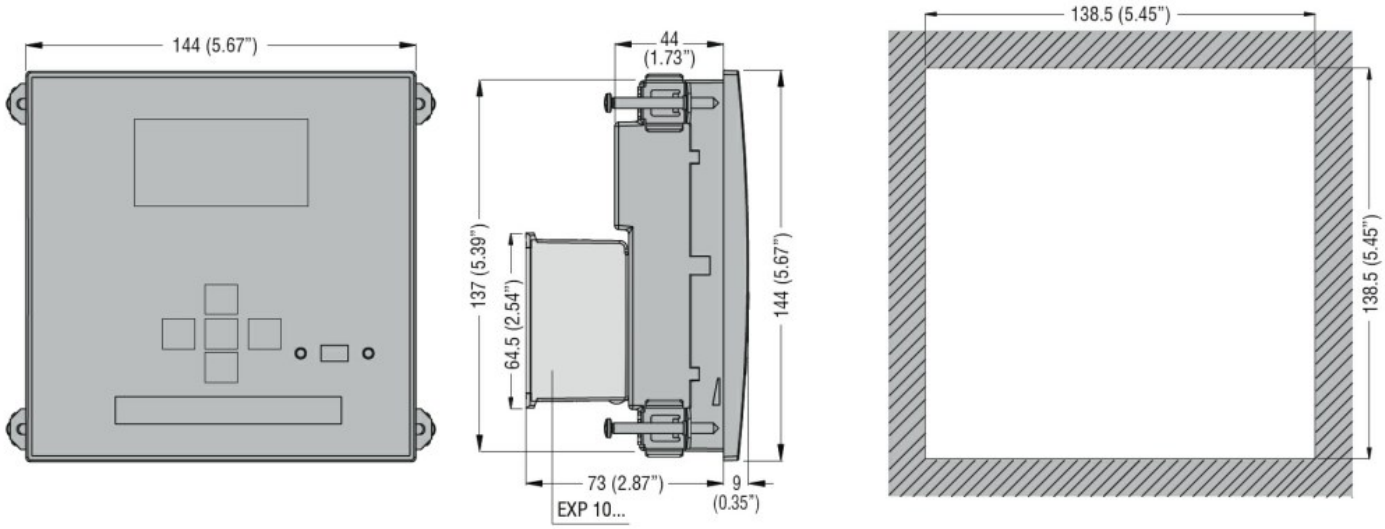

Wiring diagrams

The characteristics described in this document are subject to updates or modifications at any time. The descriptions, technical and functional information, illustrations and instructions in this brochure are purely illustrative, and are consequently not contractually binding

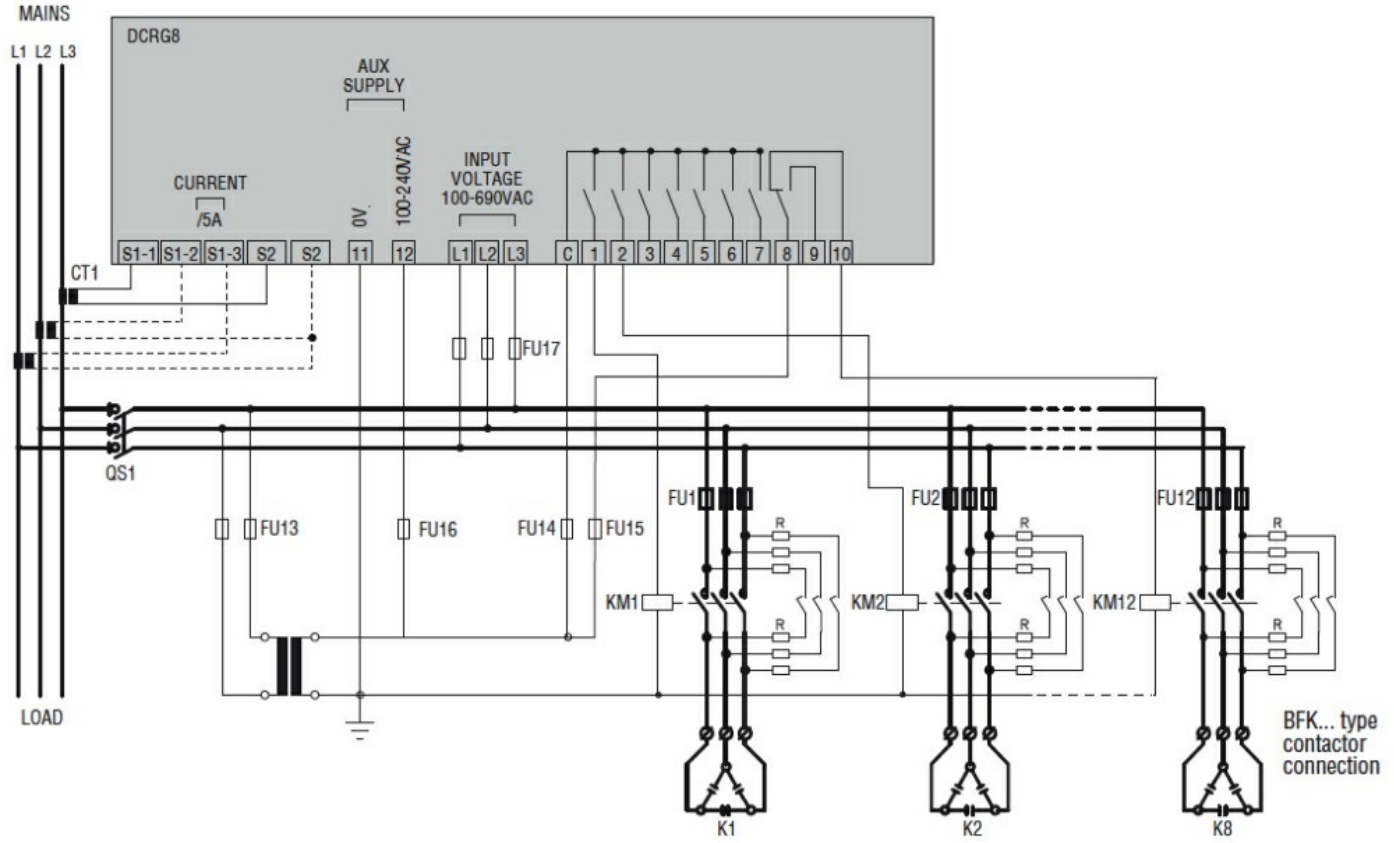

Certifications and compliance

Compliance

CSA C22.2 n°14
IEC 61010-1
IEC/EN 61000-6-2
IEC/EN 61000-6-3
UL 508

Certificates

cULus
EAC
RCM

ETIM classification

ETIM 8.0	EC001443 - Effective power (cos phi) monitoring relay

The characteristics described in this document are subject to updates or modifications at any time. The descriptions, technical and functional information, illustrations and instructions in this brochure are purely illustrative, and are consequently not contractually binding