DPDT MEDIUM PRESSURE ADJUSTABLE SWITCH 60 – 120 PSI

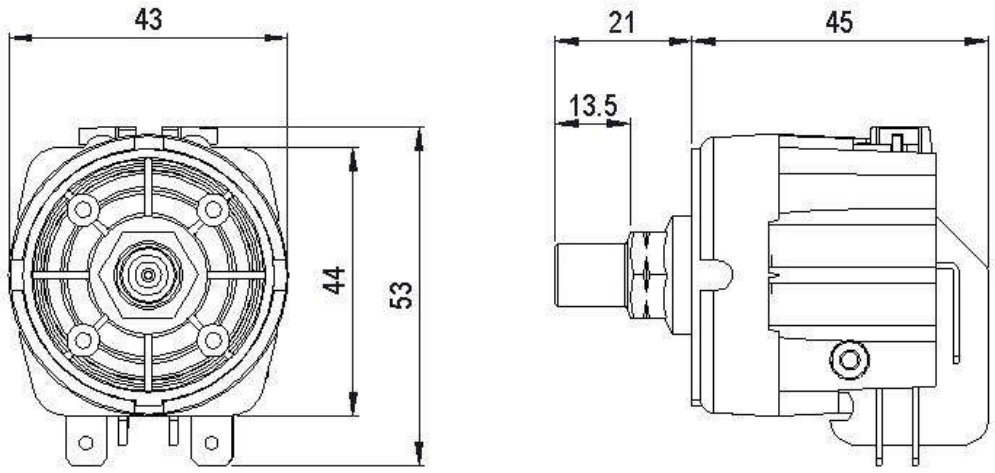

Model Number	6742-90
Pressure range	60 to 120 PSI (4.14 to 8.27 Bar)
Pressure setting	Factory set mid point of range
Withstand pressure	145psi (10 bar)
Pressure connection	1/8 " BSPT brass connector
Body material	Nylon 12
Diaphragm material	Neoprene
Electrical contacts	2 pole, change over contacts
Electrical rating	21 A @ 250 V AC
Temperature range	- 5 °C to 70 °C
Weight	50 grams

DPDT MEDIUM PRESSURE ADJUSTABLE SWITCH 60 – 120 PSI

SUITABLE FOR USE WITH THE FOLLOWING MEDIA:	
Acetone	☑
Ammonia (Liquid)	☑
Amyl Alcohol to 20°C	☑
Automotive Brake Fluid	☑
Beer	☑
Benzyl Alcohol	×
Butane	✓
Carbon Dioxide – Dry	✓
Citric Acid	✓
Copper Sulphate (Sol.)	☑
Compressed Air	✓
Cutting Oil	☑
Diesel Oil	☑
Detergent Solution	☑
Fuel Oil	☑
Glycol	✓
Hydraulic Oil	☑
Hydrogen	✓
Lubricating Oil	☑
Milk	☑
Mineral Oil	☑
Natural Gas	✓
Nitric Acid (Dil.)	×
Oxygen to 70°C	✓
Petrol	☑
Plating Solution (Chrome)	☑
Salt Water	☑
Sewage	☑
Sulphur Dioxide	×
Turpentine	☑
Vinegar	☑
Water	✓

✓ = Recommended

☑ = Suitable with modification

× = Not suitable