EXCELON® Series 74
Solenoid Operated Valve with Lockout Feature
Unthreaded Ports, 1/2" Basic Size

- **Modular installation only**
- **High-flow, 3-port/2-position, normally closed**
- **Manually operated lockout slide can be locked in the closed position with a customer supplied padlock.**
- **Coloured yellow for easy identification as a lockout valve**
- **Cushioned poppets for long life**



Technical Data

Fluid: filtered and lubricated compressed air
Main valve inlet pressure range: 2 to 10 bar
Standard internal pilot supply requires a main valve inlet pressure of 2 to 10 bar, although momentary drops below 2 bar are allowed by a check valve in the internal pilot passage.
Temperature Range*: -30° to 55°C
* Air supply must be dry enough to avoid ice formation at temperatures below 2°C.
Average Flow Factor (Cv):
In-Out Ports: 3,2
Out-Exhaust Ports: 5,3
Exhaust Port: G1/2
Materials:
Body: zinc
Pistons, Poppets: aluminium
Elastomers: Nitrile
Operator Housing: PPS plastic
Operator Base: aluminium
Plunger & Spring: stainless steel

Solenoid Operator Electrical Specifications

Voltage and power requirements

Voltage	Power
12 V d.c.	2 W
24 V d.c.	2 W
24 V 50/60 Hz	4/2,5 VA
48 V 50/60 Hz	4/2,5 VA
110/120 V 50/60 Hz	4/2,5 VA
220/240 V 50/60 Hz	9/5 VA

Electrical details for solenoid operators

Voltage tolerance:	+10/-15%
Rating:	100% ED
Inlet orifice:	1 mm
Electrical connection:	DIN 43650 Form B
Protection class	IP65 (DIN 40050)

Ordering Information

See *Ordering Information* on following pages.

ISO Symbols

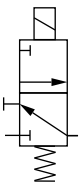

3-Port/2-Position
Normally Closed

Our policy is one of continued research and development. We therefore reserve the right to amend, without notice, the specifications given in this document.

Ordering Information. Model listed includes 2 W solenoid with shrouded push button manual operator, no coil.

Installation Type	3 Port/2 Position Normally Closed	Weight kg
Modular*	P74C-NND-PZN	0,92

* Valve ports are unthreaded. To install in air line use Quikclamp™ and Quikclamp™ pipe adaptors or connect to other Excelon 74 units.

Alternative Models

P 7 4 C - N N D - ★ ★ ★

Solenoid Manual Operator	Substitute
Shrouded push button	P
None	N

Connectors	Substitute
3 pin with cable gland	A
As above with indicator light and surge protection	B
None	N

Coil Voltage	Nominal Power Rating	Substitute
6 V d.c.	2 W	D
12 V d.c.	2 W	E
24 V d.c.	2 W	F
110/120 V 50/60 Hz	4/2,5 VA	A
220/240 V 50/60 Hz	4/2,5 VA	B
No coil	2W	Z
No solenoid	-	N

Accessories

 Quikmount® Pipe Adaptors (each kit contains one adaptor)	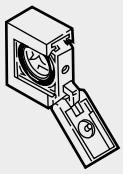 Quikclamp™	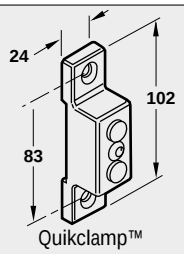 Quikclamp™ Wall Mounting Bracket	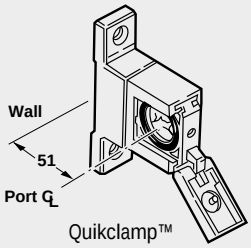 Quikclamp™ and Wall Mounting Bracket
G1/4 4315-09 G3/8 4315-10 G1/2 4315-11 G3/4 4315-12	4314-51	4313-89	4314-52

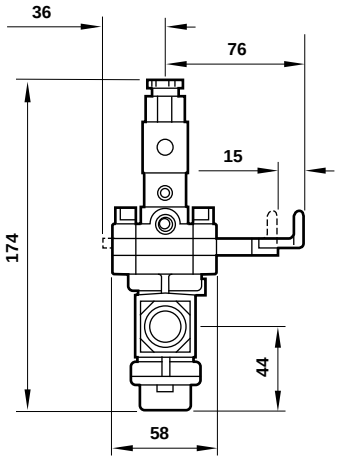

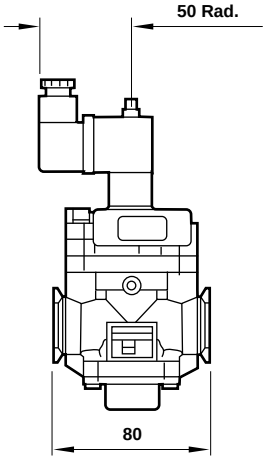

Service Kits

Item	Part Number
Seal & Gasket kit	53474-40

Service kit includes all o-rings, spring, head gasket and seals.

Warning

These products are intended for use in industrial compressed air systems only. Do not use these products where *pressures* and *temperatures* can exceed those listed under **'Technical Data'**.
Before using these products with fluids other than those specified, for non-industrial applications, life-support systems, or other applications not within published specifications, consult NORGREN.
Through misuse, age, or malfunction, components used in fluid power systems can fail in various modes. The system designer is warned to consider the failure modes of all component parts used in fluid power systems and to provide adequate safeguards to prevent personal injury or damage to equipment in the event of such failure.
System designers must provide a warning to end users in the system instructional manual if protection against a failure mode cannot be adequately provided.
System designers and end users are cautioned to review specific warnings found in instruction sheets packed and shipped with these products.

Our policy is one of continued research and development. We therefore reserve the right to amend, without notice, the specifications given in this document.