- Novelties

ProMinent® Equipment Catalogue

Products for:

- Storage
- Transfer
- Dosing
- Measurement and Control

ProMaqua® Equipment Catalogue

Products:

- For Disinfection
- For Oxidation
- Membrane Technology
- Gravity Filters

Annex

- Service
- Sales

Heidelberg, January 2011

ProMinent New Products 2011

Solenoid Metering Pumps (Chapter 1)

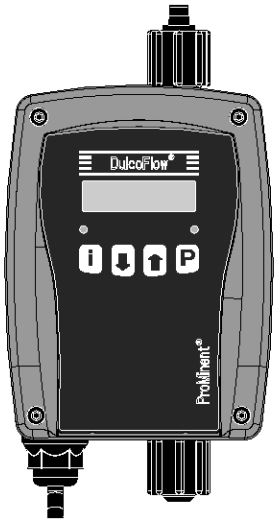

P_DFI_0002_SW1

Flow Meter DulcoFlow®

The new flow meter DulcoFlow® can be used to monitor and control pulsing liquids. The unit reliably detects non-continuous flows and the pulsing volume of liquids that have flowed through. The new flow meter is based on the ultrasonic measurement method. Parts that come into contact with the media are manufactured using chemically resistant PVDF/PTFE ensuring that aggressive media can also be measured without a problem. The device is installed directly in the line of the medium to be measured with a nominal width of 6/4, 8/5 or 12/9 mm.

Motor Diaphragm Metering Pumps (Chapter 2)

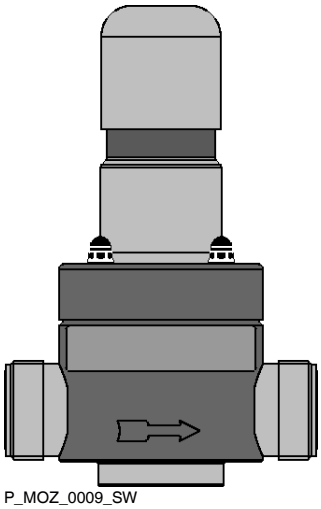

P_MOZ_0009_SW

Back Pressure Valve / Relief Valve DHV-U

The new all-purpose DHV-U series back pressure valves complement all existing back pressure valves. These virtually back pressure-free piston diaphragm valves with an internal flow are used to create a constant back pressure to ensure precise feed rates and to protect against over-metering or to increase metering precision if the back pressure is fluctuating or when metering into atmospheric pressure or a vacuum. Used as relief valves in the bypass, they limit the pump operating pressure.

ProMinent New Products 2011

Metering Systems (Chapter 4)

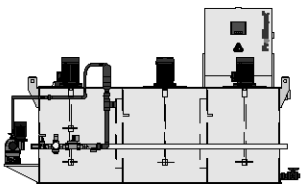

P_UL_0024_SW

The Ultromat® series are fitted as standard with a Siemens Simatic control. Unit names then change. Ultromat® systems have been designed specially for the production of stock solutions and process solutions of synthetic polyelectrolytes and have been well proven in the field. There are 3 different system concepts available:

- Continuous flow system (identcode **ULFa** with a discharge volume of up to 8,000 l/h)
- Two-chamber batch system (identcode **ULPa** with a discharge volume of up to 4,000 l/h)
- Double-deck system (identcode **ULDa** with a discharge volume of up to 2,000 l/h)

The systems can now be controlled by a touch screen and have integral process visualisation. The speed of the dry feeder or liquid concentrate pumps used can be controlled to save energy by means of a frequency converter. The following functions are included as standard:

- Control S7-1200 + Touch panel KTP 400
- Pressure sensor to measuring the filling level
- Pause function/operating alert
- Monitoring of dilution unit
- Lifting lugs for transportation
- Socket for feed unit FG205 (only if the dry feeder is selected)

DULCOTEST® Sensor Technology (Chapter 7)

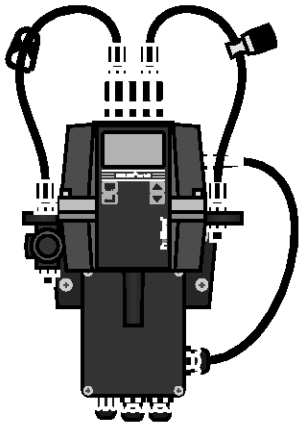

P_DMZ_0002_SW

DULCOTEST® Measuring Stations for Turbidity

The new DULCOTEST® measuring stations for turbidity in the DULCO turb C range, versions TUC1, TUC2, TUC3 and TUC4, are compact online turbidity measuring stations. consisting of a sensor, inline flow fitting and measuring device. The intended application is the treatment of drinking water, for all treatment stages, from the monitoring of raw water and filter monitoring to the measurement of fine turbidity in dispensed drinking water. It is also possible to monitor the turbidity of slightly contaminated process water and waste water and treated water from the food and beverage industry up to a turbidity value of 1,000 NTU. The measuring stations are available with and without sample cell ultrasound cleaning. Depending on the individual version, they meet the globally applicable standard ISO 7027 and the European standard DIN EN 2702 or US standard USEPA 180.1.

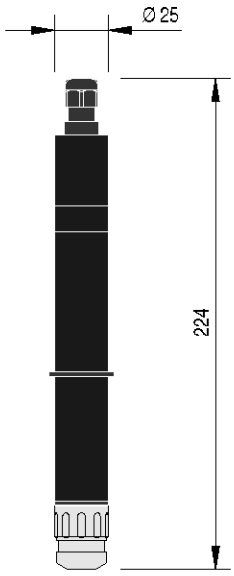

P_DT_0072_SW1

DULCOTEST® Sensor CBR 1

The DULCOTEST® sensor CBR 1 is the only sensor in the world to guarantee the reliable measurement of free chlorine up to a pH value of 9.5 with significantly reduced cross-sensitivity to bonded chlorine in contaminated water and it can also measure free bromine. The intended application of the diaphragm-covered sensor is the treatment of cooling water and slightly polluted process and waste water. The sensor delivers reliable measured values even with the presence of common cooling water conditioning agents and with film-forming, biologically active water.

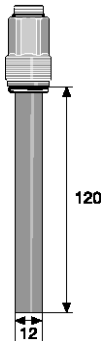

pk_6_095

DULCOTEST® Sensor CLB2

The DULCOTEST® sensor CLB2 is a cost-effective, low-maintenance, compact sensor for the measurement of free chlorine in marginally polluted water, such as drinking water and swimming pool water. It is pressure stable up to 8 bar, enabling it to be installed directly in pipework. The open amperometric sensor does not need the electrolytes to be changed and is simply replaced after a service life of around two years. The CLB2 is compatible with all common fittings for pH electrodes and is solely used on the new Compact Control Chlorine.

ProMinent New Products 2011

Measuring and Control Technology (Chapter 8)



P_DM_0025_SW1

Single-channel measuring and control device DULCOMETER® Compact

The new measuring and control device DULCOMETER® Compact for pH and redox measured variables is equipped with the standard functions for use in water treatment plants, allowing the operator to switch between the measured variables pH and redox, and between P and PID control characteristics. The direction of control can also be selected and raised or lowered for specific measured values.

A Pt 1000 can be connected to the temperature sensor input for temperature compensation of the pH value and a digital input can be connected to switch off the control or process a sample water limit contact by remote control. Ease of operation is ensured in any language thanks to the use of abbreviations, such as CAL, PARAM, CONFIG or ERROR. The DULCOMETER® Compact comes pre-configured and can be used for the treatment of waste water, drinking water and swimming pool water.

Also available for chlorine from the end of the 2nd quarter.

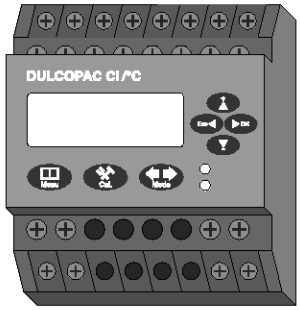

P_DM_0023_SW

Transducer and Single-Channel Control DULCOPAC®

The new single-channel measuring and control device DULCOPAC® is designed to measure the variables pH, redox, chlorine, bromine, peracetic acid, hydrogen peroxide and conductivity in aqueous solutions and has one sensor input for each measured variable.

The transducer and single-channel control is particularly suitable for water and waste water treatment applications in which measured values seldom have to be recorded or adjusted. The device is therefore designed to be installed on a top hat rail in a control cabinet and is operated and configured by push buttons and the integrated LCD display.

Several modules are available to operate the transducer and single-channel control: DULCOPAC ® voltage supply for up to 10 DULCOPAC® transducers/controls.

ProMaqua New Products 2011

UV Systems - Dulcodes S (Chapter 1)

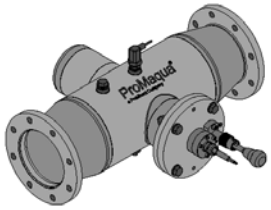

P_PMA_DS_0018_SW1

Three new UV systems Dulcodes S complete the existing range. The new multi-lamp systems available in three capacities, 4, 6 and 9 kW, can treat pool water with a maximum flow of 240, 330 and 500 m^3/h and photochemically decompose combined chlorine. These exceptionally compact systems are fitted with Powerline S medium-pressure lamps and can be installed in any location. All systems with a capacity of between 1 and 9 kW can be fitted or retrofitted with manual or motorised wipers.

Ozone Generation Plants - OZONFILT® OZMa (Chapter 2)

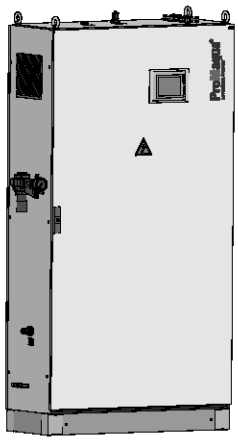

P_PMA_OF_0010_SW

There are now three new additions to each of the ozone generation systems OZONFILT® series OZMa 4-6 A and 4-6 O that generate up to 735 g of ozone per hour from compressed air or oxygen. Its lower energy and cooling water consumption and compact design are key features of the new ozone generation plant OZONFILT® OZMa. The ozone volume can be set reproducibly and independently of voltage and pressure fluctuations. There is minimal compressed air consumption due to the use of self-optimising pressure swing adsorption. Ozone can be directly fed into the water, even at back pressure of up to 2 bar, without the need for additional investment in booster pumps, injectors etc.

Chlorine Dioxide Plants - Bello Zon® (Chapter 3)

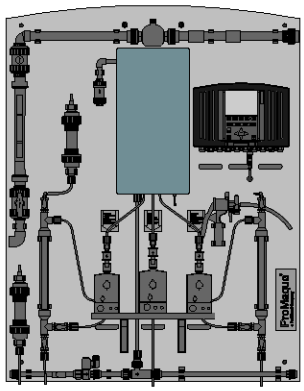

P_PMA_BEZ_0023_SW

CDKc 420 (figure shows optional configuration)

The chlorine dioxide systems Bello Zon® CDVc and CDKc are wired ready for connection and are used for the production, metering and monitoring of 20 to 7,500 g/h of chlorine dioxide. An innovative and completely newly developed reactor concept ensures the efficient production and metering of chlorine dioxide. Improved operating safety thanks to the use of PVDF and online monitoring of the metering pumps' stroke lengths. The extremely high level of safety guarantees the integral measurement, documentation and visualisation of ClO_2, chlorite, pH, redox potential and the automatic monitoring of operating parameters and maintenance intervals. The systems operate on the basis of the chlorite acid process in accordance with DVGW (German Technical and Scientific Association for Gas and Water) guidelines (Specifications W 224 and W 624).

ProMaqua New Products 2011

Electrolysis Plants - CHLORINSITU® compact (Chapter 4)

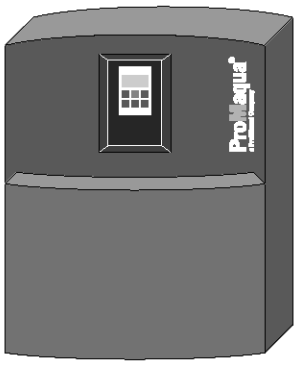

P_PMA_EL_0007_SW

Membrane electrolysis systems of the CHLORINSITU® IV compact type are new additions to the range of electrolysis systems CHLORINSITU®. They operate as safe negative pressure systems and are designed to be compact as well as space-saving. The negative pressure in the system ensures that no chlorine gas can escape into the environment at any time. A fully automatic softener unit is incorporated in the system and it is possible to set the time and water hardness level for regeneration. Defining the regeneration time reliably ensures that regeneration is only performed when disinfection is not needed. Only as much regeneration salt is used as is required, as regeneration takes place according to the hardness of the water, thus saving on regeneration salt. The CHLORINSITU® IV compact can optionally be used to adjust the pH level with the sodium hydroxide produced, as well as disinfecting the water with hypochlorous acid.

ProMinent® Equipment Catalogue

Products for:

- Storage
- Transfer
- Dosing
- Measurement and Control

Issued by:
ProMinent Dosiertechnik GmbH

ProMinent Dosiertechnik GmbH
Im Schuhmachergewann 5-11
69123 Heidelberg · Germany
Telephone: +49 6221 842-0
Fax: +49 6221 842-617
info@prominent.com
www.prominent.com

Subject to technical amendments.

This product catalogue replaces
all previous catalogues and
price lists.

Heidelberg, January 2011

Table Of Contents

ProMinent® Equipment Catalogue

Overview Chemical Fluid Handling

Capacity Data
Data Required For Specification Of Metering Pump And Accessories
ProMinent® Chemical Resistance List

1 Solenoid-Driven Metering Pumps

1.0	Overview Of Solenoid-Driven Metering Pumps	1-1
1.1	alpha Motor Driven Diaphragm Metering Pumps	1-7
1.2	Beta® b Solenoid Diaphragm Metering Pumps	1-11
1.3	gamma/ L Solenoid Diaphragm Metering Pumps	1-17
1.4	delta® Solenoid-Driven Diaphragm Metering Pumps	1-23
1.5	mikro delta® Precision Piston Metering Pumps	1-27
1.6	Pneumados b Metering Pumps	1-32
1.7	DULCO®flex Peristaltic Pumps	1-37
1.8	Mechanical-Hydraulic Accessories	1-43
1.9	Mechanical/Hydraulic Special Accessories	1-85
1.10	Application Examples	1-96

2 Motor Driven Metering Pumps

2.0	Overview Motor Driven Metering Pumps	2-1
2.1	Vario C Diaphragm Metering Pumps	2-6
2.2	Sigma/ 1 Diaphragm Metering Pumps	2-9
2.3	Sigma/ 2 Diaphragm Metering Pumps	2-15
2.4	Sigma/ 3 Diaphragm Metering Pumps	2-21
2.5	Hydraulic/Mechanical Accessories	2-27
2.6	Electrical Accessories	2-50
2.7	Special Accessories	2-55
2.8	Application Examples	2-58

3 Process Metering Pumps

3.0	Overview Process Metering Pumps	3-1
3.1	ProMinent EXtronic® Metering Pumps	3-5
3.2	Makro TZ Diaphragm Metering Pumps	3-13
3.3	Makro/ 5 Diaphragm Metering Pumps	3-19
3.4	Hydro Hydraulic Diaphragm Metering Pumps	3-23
3.5	Makro TZ Hydraulic Diaphragm Metering Pumps	3-31
3.6	Makro/ 5 Hydraulic Diaphragm Metering Pumps	3-35
3.7	Orlita® MF Hydraulic Diaphragm Metering Pumps	3-41
3.8	Orlita® MH Hydraulic Diaphragm Metering Pumps	3-56
3.9	Sigma/ 2 Plunger Metering Pumps	3-58
3.10	Meta Plunger Metering Pumps	3-63
3.11	Makro TZ Plunger Metering Pumps	3-67
3.12	Makro/ 5 Plunger Metering Pumps	3-71
3.13	Orlita® PS Plunger Metering Pumps	3-76
3.14	Orlita® DR Plunger Metering Pumps	3-78
3.15	Process Diaphragm Pump TriPower® MF	3-79
3.16	Hydraulic/Mechanical Accessories	3-80

4 Dosing Systems

4.0	Overview Dosing Systems DULCODOS® And Ultromat®	4-1
4.1	Dosing Systems DULCODOS® eco	4-7
4.2	Dosing Systems DULCODOS® panel	4-15
4.3	Hydrazin Dosing Systems DULCODOS® Hydrazin	4-23
4.4	Liquid Enzyme Dosing Systems DULCODOS® PPLA	4-25
4.5	Swimming Pool Dosing Systems DULCODOS® Pool	4-27
4.6	Customized Dosing Systems DULCODOS® custom	4-37
4.7	Polymer Preparation and Dosing Systems Ultromat®	4-39
4.8	Application Examples	4-54

Table Of Contents

ProMinent® Equipment Catalogue

5 Tanks And Transfer Pumps

5.0	Overview Of Tanks And Transfer Pumps	5-1
5.1	Dosing Tanks And Collecting Pans PE	5-3
5.2	Accessories For Dosing Tanks	5-7
5.3	Storage Tanks PP/PE	5-11
5.4	Spectra Eccentric Screw Pump	5-20
5.5	von Taine® Centrifugal Pump	5-22
5.6	Duodos Air Operated Diaphragm Pump	5-27
5.7	DULCO®Trans Barrel Pump	5-30
5.8	DULCO®flex	5-32
5.9	Application Examples	5-55

6 Panel-Mounted Measuring/Control Stations

6.0	Overview Panel-Mounted Measuring/Control Stations	6-1
6.1	DULCOTROL® Drinking Water/F&B	6-5
6.2	DULCOTROL® Cooling Water	6-15
6.3	DULCOTROL® Waste Water	6-25
6.4	DULCOTROL® Free Chlorine – pH-independent	6-35

7 Sensor Technology DULCOTEST®

7.0	Overview of Sensor Technology DULCOTEST®	7-1
7.1	Sensor Technology DULCOTEST® Measuring principles	7-5
7.2	Sensors DULCOTEST® pH, ORP, fluoride and temperature	7-9
7.3	DULCOTEST® Amperometric Sensors	7-26
7.4	DULCOTEST® Conductivity Sensors	7-48
7.5	DULCOTEST® Measuring Points for Turbidity	7-60
7.6	Sensor Technology Accessories	7-62
7.7	Application Examples	7-78

8 Measuring And Control Technology

8.0	Overview Measuring And Control Technology	8-1
8.1	DULCOMETER® Measuring And Control Technology	8-6
8.2	DULCOMETER® Single-channel Measuring and Control Unit, Compact for pH, Redox and Chlorine	8-8
8.3	DULCOMETER® Single-channel Measuring and Control Unit, D1Cb/c, for all Measured Variables	8-9
8.4	DULCOMETER® Single-Channel Measuring And Control Unit, Type D1Ca	8-13
8.5	DULCOMETER® Two-channel measuring and control unit for the treatment of pool water, type DSRa	8-28
8.6	DULCOMETER® Two-Channel Measuring And Control Unit, Type D2Ca	8-30
8.7	Multi-Channel Measuring And Control System For Drinking Water And Swimming Pool Water Treatment	8-33
8.8	Controller with integral metering pump	8-62
8.9	Cooling Tower And Boiler Controller	8-63
8.10	DULCOMETER® Transmitters	8-71
8.11	Measuring And Test Systems	8-76
8.12	Accessories For Measurement And Control Devices	8-81
8.13	Application Examples	8-83

9 Domestic Water Plant

9.0	Systems For Domestic Water Installations	9-1
9.1	Promatik proportional metering unit	9-2
9.2	DULCODOS® domestic Water Meter Controlled Dosing Plant	9-4
9.3	Chemicals For Water Treatment	9-6

Overview Chemical Fluid Handling

Optimum Interaction Of All Components

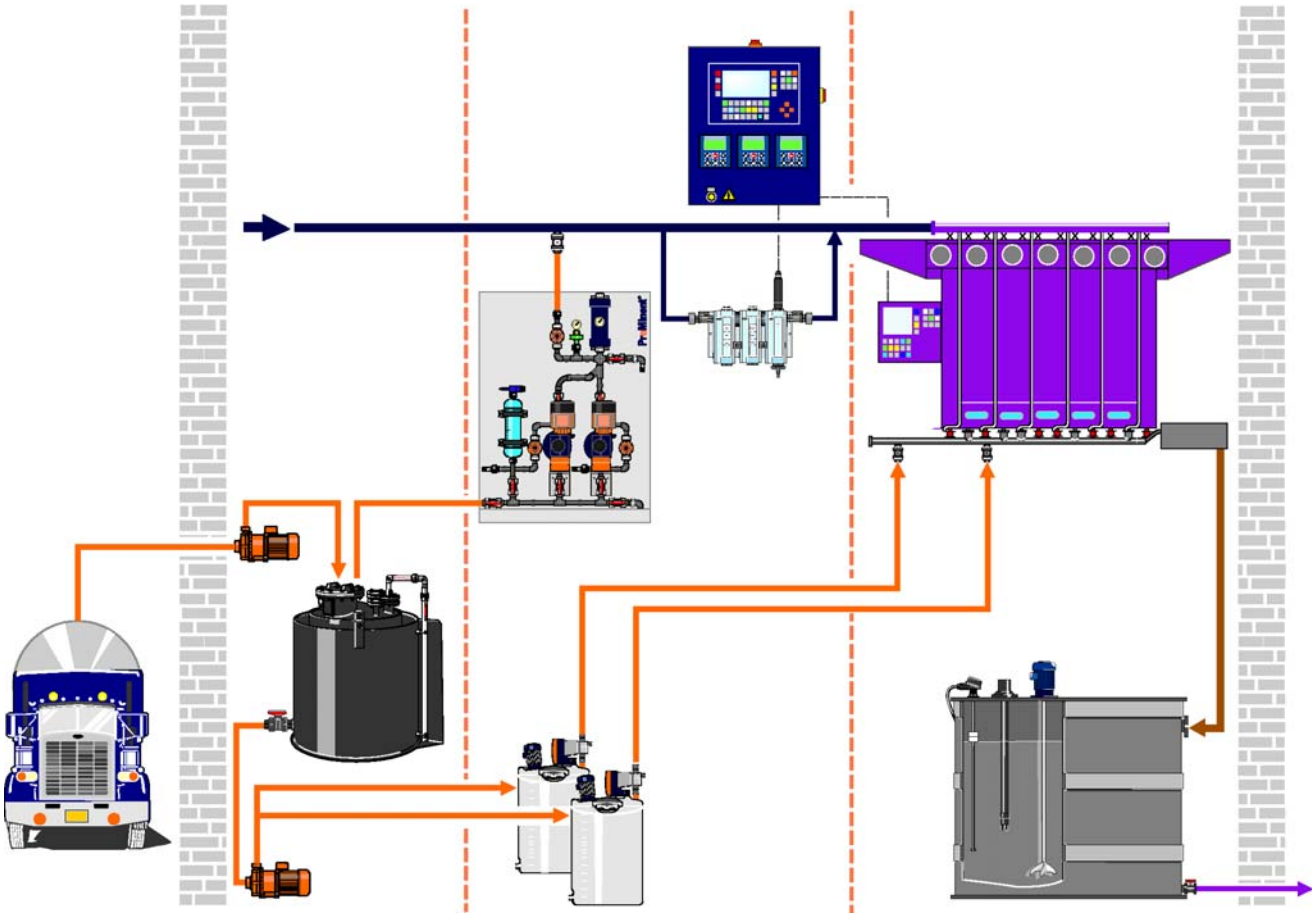

pk_0_001

ProMinent® solutions store, transfer and meter chemicals – in amounts ranging from 0.1 l/h to 40,000 l/h at pressures of 2 to 3,000 bar. In every industrial environment: whether in a simple control loop or a complex field bus application – solutions from ProMinent are simple and efficient.

Automated systems improve the quality of your processes thanks to reliable metering. This increases the quality of your products, saves chemicals, improves environmental compatibility and lowers the costs of wastewater disposal. You also need fewer operating personnel.

Three criteria determine the design of a chemical fluid handling solution: The chemical being handled, the required level of reproducibility and the system control requirements.

- **Storage and transfer**
  ProMinent® storage and metering tanks make chemicals available wherever they are required. Matching transfer pumps ensure problem-free transference.
- **Metering/Measuring/Controlling**
  ProMinent offers dosing systems with maximum levels of resistance against practically all types and concentrations of chemicals. The accuracy of the metering is determined not just by the pump but also by their interaction with selected accessories. Whether the pump is calibrated once and then meters continuously or whether simple measured variable-dependant metering or integration into a field bus environment is required: thanks to its broad product range ProMinent offers the right pumps, the optimum measurement and control systems and perfectly interacting accessories for all industry requirements.
- **Wastewater treatment**
  pH-correction or specialist detoxification ensures that wastewater can be safely disposed of via the public drainage system.

Capacity Data

Capacity Data Metering Pumps

The following summary of the capacity data for the comprehensive ProMinent® metering pump range facilitates pump selection based on a given back pressure (bar) and feed rate (l/h).

When selecting a pump type, please specify the co-ordinate of the back pressure (bar) and feed rate (l/h).

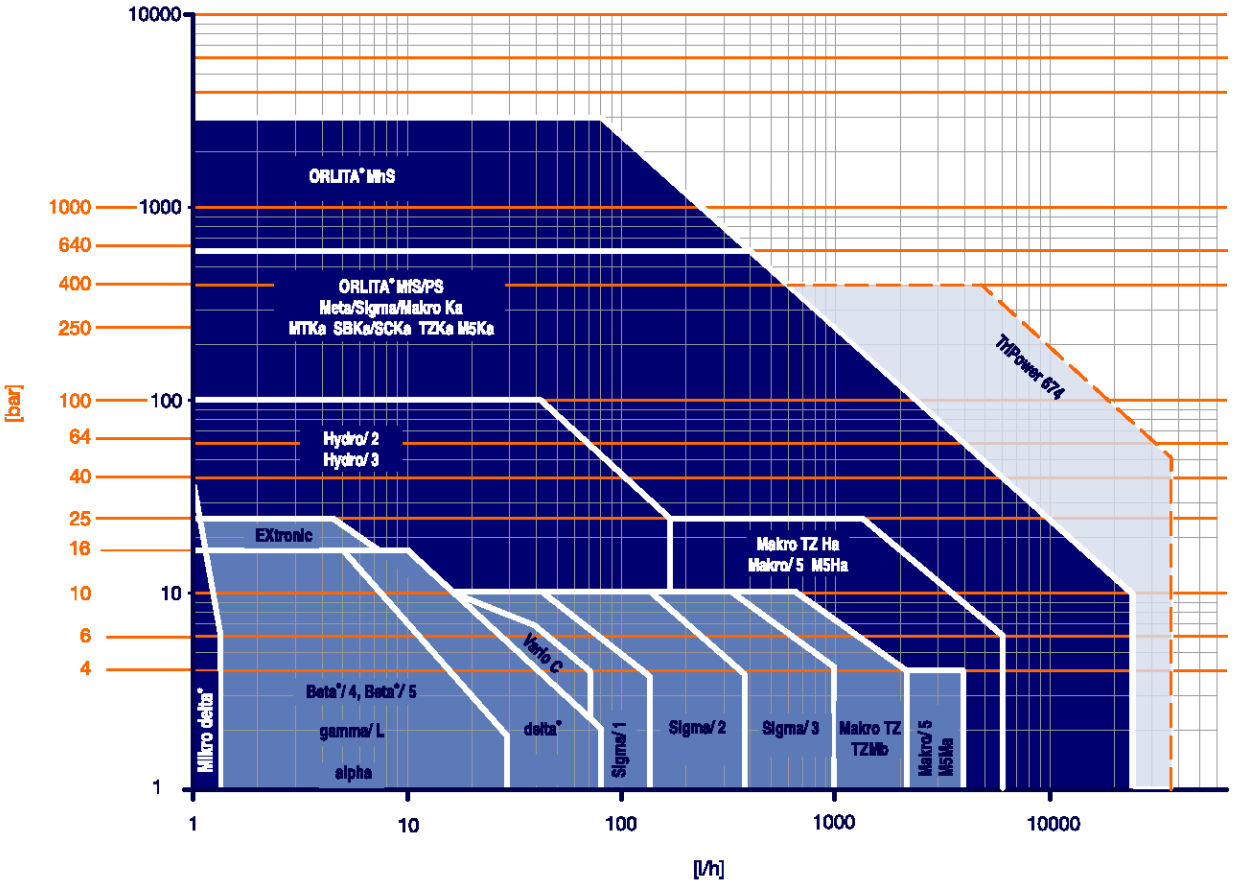

pk_0_001_4_4c

pressure [bar] over Feed quantity [l/h]

Data Required For Specification Of Metering Pump And Accessories

Pump Specification Data

Min./max. required feed rate	l/h _____
Available power supply	_____ V, _____ Hz
Min./max. operating temperature	°C _____
Properties of process chemical	_____
Name, concentration %	_____
Solids content %	_____
Dynamic viscosity mPa (= cP)	_____
Vapour pressure at operating temperature	bar _____
Remarks, e.g. abrasive,	_____
gaseous, flammable,	_____
corrosive towards	_____

Suction conditions:

Min./max. suction lift	m _____
Min./max. positive suction head	m _____
Pressure in chemical tank	bar _____
Suction line length	m _____
Suction line diameter	mm _____

Discharge conditions:

Min./max. back pressure	bar _____
Min./max. discharge head	m _____
Min./max. negative discharge head	m _____
Discharge line length	m _____
Discharge line diameter	mm _____
Number of valves and fittings in suction and discharge line	_____

Data required for proportional dosing:

Water flow Q min./max.	m^3/h _____
Required final concentration	g/m^3, ppm _____

Example:

A required dose in mg/l = g/m^3 = ppm

(Water flow Q max. 50 m^3/h)

Pulse spacing (flow volume per pulse) of water meter 5 l.

Process fluid = sodium hypochlorite solution Na OCl with 12 % chlorine (by weight) = 120 g/kg = 150 g/l = 150 mg/ml

Selected dosing pump GALa 1005 NPB2 with 0.41 ml/per stroke volume, at max. 10800 strokes/h.

Variables: pump type, pulse spacing and concentration. The stroke rate (max. throughput l/h: pulse spacing l/pulse = 50,000 l/h : 5 l/pulse = 10000 pulses/h) must not exceed the max. stroke frequency (10800 strokes/h) of the dosing pump.

$$\text{Feed quantity} = \frac{\text{water throughput Q max. (l/h) x stroke volume (l)}}{\text{pulse spacing (l)}} = \frac{\text{50,000 l x 0.00041 l}}{\text{h x 5 l}} = 4.1 \text{ l/h}$$

$$\text{Final dose} = \frac{\text{concentration (mg/ml) x stroke volume (l)}}{\text{pulse spacing (l)}} = \frac{\text{150 mg x 0.41 ml}}{\text{ml x 5 l}} = 12.3 \text{ mg/l}$$

$= 12.3\ g/m^3$

$= 12.3$ ppm chlorine Cl_2

pk_0_002

ProMinent® Chemical Resistance List

Resistance of Materials Used in Liquid Ends to the Chemicals Most Frequently Used

The data apply to standard conditions (20 °C, 1,013 mbar).

s	=	saturated solution in water
+	=	resistant
+/o	=	largely resistant
o	=	conditionally resistant
-	=	not resistant
n	=	resistance not known
=>	=	see
*	=	For bonded connections, the resistance of the adhesive (e.g. Tangit) is to be considered. (Materials of the types 'o' and '-' are not recommended !)
**	=	does not apply to glass fibre reinforced material

Concentration data are stated in weight percent, referred to aqueous solutions. If percentages are stated for the level of resistance, this level of resistance is only valid up to this concentration.

NOTE:

The elastomers **CSM (Hypalon®)** and I**IR (butyl rubber)** used as diaphragm materials in pulsation dampers have properties similar to **EPDM**.

PTFE is resistant to all chemicals in this list.

PFTE filled with carbon,however, is attacked by strong oxidants such as bromine (anhydrous) or concentrated acids (phosphoric acid, sulphuric acid, chromic acid).

The resistance of PVC-U adhesive joints with Tangit deviates from the list below with regard to the following chemicals:

Medium	Concentration range
Sulfochromic acid	≥ 70 % H_2SO_4+ 5 % $K_2Cr_2O_7$/$Na_2Cr_2O_7$
Chromic acid	≥ 10 % CrO_3
Hydrochloric acid	≥ 25 % HCl
Hydrogen peroxide	≥ 5 % H_2O_2
Hydrofluoric acid	≥ 0 % HF

Explanation of abbreviations used as column headings:

Acrylic:	Acrylic resistance
PVC:	PVC, rigid, (PVC-U) resistance
PP:	Polypropylene resistance
PVDF:	PVDF resistance
1.4404:	Stainless steel 1.4404 & 1.4571 resistance
FPM:	Fluorine Rubber (e.g. Viton® A & B) resistance
EPDM:	Ethylene-Propylene-Dien-rubber resistance
Tygon:	Tygon® R-3603 resistance
Pharmed:	Pharmed® resistance
PE:	Polyethylene resistance
2.4819:	Hastelloy C-276 resistance
WGK:	Wassergefährdungsklasse

Viton® is a registered trademark of DuPont Dow Elastomers

Water pollution classes (WPC):

1	=	slightly hazardous to water
2	=	hazardous to water
3	=	severely hazardous to water
(X)	=	No classification. Classification according to conclusion by analogy. To be used under reserve.

Safety data sheets

NEW

Safety data sheets on our products in a number of different languages are provided on our website.

www.prominent.com/MSDS

ProMinent® Chemical Resistance List

The data has been taken from relevant manufacturer´s documentation and our own tests. Resistance of materials is also dependant on other factors, e.g. operating conditions, conditions of surfaces etc., and so this list must be treated as an initial guide only. It cannot claim to offer any guarantees. It should be taken into consideration in particular that usual dosing media are compounds for the most part, and their corrosiveness cannot be deducted simply by adding the corrosiveness of each single component. In such cases the chemical producers' data of the material compatibility are to be considered as a matter of prime importance for the material choice. A safety data sheet does not give these data and therefore cannot take the place of the technical documentation on the application.

Chemical	Formula	Conc	Acryl	PVC	PP	PVDF	1.4404	FPM	EPDM	Tygon	PharMed	PE	HastelloyC	WPC
Acetaldehyde	CH_3CHO	100%	-	-	o	-	+	-	+/o	-	-	+	+	2
Acetamide	CH_3CONH_2	s	+	+	+	+	+	o	+	-	+/o	+	+	1
Acetic Acid	CH_3COOH	100%	-	50%	+	+	+	-	o	60%	60%	70%	+	1
Acetic Anhydride	$(CH_3CO)_2O$	100%	-	-	o	-	+	-	+/o	-	+	o	+	1
Acetic Ether => Ethyl Acetate														
Acetone	CH_3COCH_3	100%	-	-	+	-	+	-	+	-	-	+	+	1
Acetophenone	$C_6H_5COCH_3$	100%	-	n	+	-	+	-	+	n	n	+	+	
Acetyl Chloride	CH_3COCl	100%	-	+	n	-	o	+	-	-	o	n	+	1
Acetylacetone	$CH_3COCH_2COCH_3$	100%	-	-	+	-	+	-	+	n	n	+	+	1
Acetylene Dichloride => Dichloro Ethylene														
Acetylene Tetrachloride => Tetrachloro Ethane														
Acrylonitril	CH_2=CH-CN	100%	-	-	+	+	+	-	-	-	-	+	+	3
Adipic Acid	$HOOC(CH_2)_4COOH$	s	+	+	+	+	+	+	+	-	+/o	+	+	1
Allyl Alcohol	CH_2CHCH_2OH	96%	-	o	+	+	+	-	+	-	o	+	+/o	2
Aluminium Acetate	$Al(CH_3COO)_3$	s	+	+	+	+	+	+	+	+	+	+	+/o	1
Aluminium Bromide	$AlBr_3$	s	+	+	+	+	n	+	+	+	+	+	+	2
Aluminium Chloride	$AlCl_3$	s	+	+	+	+	-	+	+	+	+	+	+	1
Aluminium Fluoride	AlF_3	10%	+	+	+	+	-	+	+	+	+	+	+/o	1
Aluminium Hydroxide	$Al(OH)_3$	s	+	+	+	+	+	+	+	+	+	+	+	1
Aluminium Nitrate	$Al(NO_3)_3$	s	+	+	+	+	+	+	+	+	+	+	+	1
Aluminium Phosphate	$AlPO_4$	s	+	+	+	+	+	+	+	+	+	+	+	1
Aluminium Sulphate	$Al_2(SO_4)_3$	s	+	+	+	+	+	+	+	+	+	+	+	1
Ammonium Acetate	CH_3COONH_4	s	+	+/o	+	+	+	+	+	+	+	+	+	1
Ammonium Bicarbonate	NH_4HCO_3	s	+	+	+	+	+	+	+	+	+	+	+	1
Ammonium Carbonate	$(NH_4)_2CO_3$	40%	+	+	+	+	+	+	+	+	+	+	+	1
Ammonium Chloride	NH_4Cl	s	+	+	+	+	-	+	+	+	+	+	+/o	1
Ammonium Fluoride	NH_4F	s	+	o	+	+	o	+	+	+	+	+	+	1
Ammonium Hydroxide	"NH_4OH"	30%	+	+	+	+ (25 °C)	+	-	+	+	+	+	+	2
Ammonium Nitrate	NH_4NO_3	s	+	+	+	+	+	+	+	+	+	+	+	1
Ammonium Oxalate	$(COONH_4)_2 * H_2O$	s	+	+	+	+	+	+	+	+	+	+	+	1
Ammonium Perchlorate	NH_4ClO_4	10%	+	+	+	+	+	+	+	+	+	+	+	1
Ammonium Peroxodisulphate	$(NH_4)_2S_2O_8$	s	+	+	+	+	5%	+	+	+	+	+	5%	2
Ammonium Phosphate	$(NH_4)_3PO_4$	s	+	+	+	+	10%	+	+	+	+	+	10%	1
Ammonium Sulphate	$(NH_4)_2SO_4$	s	+	+	+	+	10%	+	+	+	+	+	10%	1
Ammonium Sulphide	$(NH_4)_2S$	s	+	+	+	+	n	+	+	n	n	+	n	2
Ammoniumaluminium Sulphate	$NH_4Al(SO_4)_2$	s	+	+	+	+	+	+	+	+	+	+	+	1
Amyl Alcohol	$C5H_{11}OH$	100%	+	+	+	+	+	-	+	-	-	+	+	1
Aniline	$C_6H_5NH_2$	100%	-	-	+	+	+	-	+/o	-	o	+	+	2
Aniline Hydrochloride	$C_6H_5NH_2 * HCl$	s	n	+	+	+	-	+/o	+/o	-	o	+	+	2
Antimony Trichloride	$SbCl_3$	s	+	+	+	+	-	+	+	+	+	+	n	2
Aqua Regia	$3\ HCl + HNO_3$	100%	-	+	-	+	-	-	o	-	-	-	-	2
Arsenic Acid	H_3AsO_4	s	+	+	+	+	+	+	+	20%	o	+	+	3
Barium Carbonate	$BaCO_3$	s	+	+	+	+	+	+	+	+	+	+	+	1
Barium Chloride	$BaCl_2$	s	+	+	+	+	-	+	+	+	+	+	+	1
Barium Hydroxide	$Ba(OH)_2$	s	+	+	+	+	+	+	+	+	+	+	+	1
Barium Nitrate	$Ba(NO_3)_2$	s	+	+	+	+	+	+	+	+	+	+	+	1
Barium Sulphate	$BaSO_4$	s	+	+	+	+	+	+	+	+	+	+	+	1
Barium Sulphide	BaS	s	+	+	+	+	+	+	+	+	+	+	+	(1)
Benzaldehyde	C_6H_5CHO	100%	-	-	+	-	+	+	+	-	-	o	+	1
Benzene	C_6H_6	100%	-	-	o	+	+	o	-	-	-	o	+	3
Benzene Sulphonic Acid	$C_6H_5SO_3H$	10%	n	n	+	+	+	+	-	-	-	n	+	2
Benzoic Acid	C_6H_5COOH	s	+	+	+	+	+	+	+	-	+/o	+	+	1
Benzoyl Chloride	C_6H_5COCl	100%	-	n	o	n	o	+	+	n	n	o	+	2
Benzyl Alcohol	$C_6H_5CH_2OH$	100%	-	-	+	+	+	+	-	-	+	+	+	1
Benzyl Benzoate	$C_6H_5COOC_7H_7$	100%	-	-	+	o	+	+	-	-	-	+	+	2

ProMinent® Chemical Resistance List

Chemical	Formula	Conc	Acryl	PVC	PP	PVDF	1.4404	FPM	EPDM	Tygon	PharMed	PE	HastelloyC	WPC
Benzyl Chloride	$C_6H_5CH_2Cl$	90%	-	n	o	+	+	+	-	-	-	o	+	2
Bitter Salt => Magnesium Sulphate														
Bleach => Sodium Hypochlorite														
Blue Vitriol => Copper Sulphate														
Borax => Sodium Tetraborate														
Boric Acid	H_3BO_3	s	+	+	+	+	+	+	+	+	+	+	+	1
Brine		s	+	+/o	+	+	+/o	+	+	+	+	+	+	1
Bromine (dry)	Br_2	100%	-	-	-	+	-	-	-	-	-	-	+	2
Bromine Water	$Br_2 + H_2O$	s	-	+	-	+	-	-	-	n	n	-	n	(2)
Bromo Benzene	C_6H_5Br	100%	n	n	o	+	+	o	-	-	-	o	+	2
Bromochloro Methane	CH_2BrCl	100%	-	-	-	+	+	n	+/o	-	-	o	+	2
Bromochlorotrifluoro Ethane	$HCClBrCF_3$	100%	-	-	o	+	+	+	-	+	+	o	+	(3)
Butanediol	HOC_4H_8OH	10%	n	+	+	+	+	o	+	+	+	+	+	1
Butanetriol	$C_4H_{10}O_3$	s	+	+	+	+	+	o	+	+	+	+	+	1
Butanol	C_4H_9OH	100%	-	+	+	+	+	o	+/o	-	-	+	+	1
Butyl Acetate	$C_7H_{13}O_2$	100%	-	-	+	+	+	-	-	-	+/o	+	+	1
Butyl Acetate	$CH_3COOC_4H_9$	100%	-	-	o	+	+	-	+/o	-	+/o	-	+	1
Butyl Alcohol => Butanol														
Butyl Amine	$C_4H_9NH_2$	100%	n	n	n	-	+	-	-	n	n	+	+	1
Butyl Benzoate	$C_6H_5COOC_4H_9$	100%	-	-	o	n	+	+	+	-	-	o	+	2
Butyl Mercaptane	C_4H_9SH	100%	n	n	n	+	n	+	-	n	n	n	n	3
Butyl Oleate	$C_{22}H_{42}O_2$	100%	n	n	n	+	+	+	+/o	n	n	n	+	1
Butyl Stearate	$C_{22}H_{44}O_2$	100%	o	n	n	+	+	+	-	n	n	n	+	1
Butyraldehyde	C_3H_7CHO	100%	-	n	+	n	+	-	+/o	-	-	+	+	1
Butyric Acid	C_3H_7COOH	100%	5%	20%	+	+	+	+	+	-	+/o	+	+	1
Calcium Acetate	$(CH_3COO)_2Ca$	s	+	+	+	+	+	+	+	+	+	+	+	1
Calcium Bisulphite	$Ca(HSO_3)_2$	s	+	+	+	+	+	+	+	+	+	+	+	(1)
Calcium Carbonate	$CaCO_3$	s	+	+	+	+	+	+	+	+	+	+	+	1
Calcium Chloride	$CaCl_2$	s	+	+	+	+	-	+	+	+	+	+	+	1
Calcium Cyanide	$Ca(CN)_2$	s	+	+	+	+	n	+	+	+	+	+	n	3
Calcium Hydroxide	$Ca(OH)_2$	s	+	+	+	+	+	+	+	+	+	+	+	1
Calcium Hypochlorite	$Ca(OCl)_2$	s	+	+	o	+	-	o	+	+	+	+	+	2
Calcium Nitrate	$Ca(NO_3)_2$	s	+	50%	50%	+	+	+	+	+	+	+	+	1
Calcium Phosphate	$Ca_3(PO_4)_2$	s	+	+	+	+	+	+	+	+	+	+	+	1
Calcium Sulphate	$CaSO_4$	s	+	+	+	+	+	+	+	+	+	+	+	1
Calcium Sulphide	CaS	s	+	+	+	+	n	+	+	+	+	+	+	(2)
Calcium Sulphite	$CaSO_3$	s	+	+	+	+	+	+	+	+	+	+	+	(1)
Calcium Thiosulphate	CaS_2O_3	s	+	+	+	+	-	+	+	+	+	+	+	1
Carbolic Acid => Phenole														
Carbon Disulphide	CS_2	100%	-	-	o	+	+	+	-	-	-	o	+	2
Carbon Tetrachloride	CCl_4	100%	-	-	-	+	+	+	-	-	-	o	+	3
Carbonic Acid	"H_2CO_3"	s	+	+	+	+	+	+	+	+	+	+	+	1
Caustic Potash => Potassium Hydroxide														
Caustic Soda => Sodium Hydroxide														
Chloric Acid	$HClO_3$	20%	+	+	-	+	-	o	o	+	+	10%	+	2
Chlorinated Lime => Calcium Hypochlorite														
Chlorine Dioxide Solution	$ClO_2 + H_2O$	0.5%	o	+	o	+	-	o	-	o	-	o	+	
Chlorine Water	$Cl_2 + H_2O$	s	+	+	o	+	-	+	+	o	-	o	+	
Chloro Benzene	C_6H_5Cl	100%	-	-	+	+	+	+	-	-	-	o	+	2
Chloro Ethanol	$ClCH_2CH_2OH$	100%	-	-	+	o	+	-	o	-	+	+	+	3
Chloro Ethylbenzene	$C_6H_4ClC_2H_5$	100%	-	-	o	n	+	o	-	-	-	o	+	(2)
Chloro Phenole	C_6H_4OHCl	100%	-	n	+	+	+	n	-	-	-	+	+	2
Chloro Toluene	C_7H_8Cl	100%	-	-	n	+	+	+	-	-	-	n	+	2
Chloroacetone	$ClCH_2COCH_3$	100%	-	-	n	n	+	-	+	-	-	n	+	3
Chlorobutadiene	C_4H_5Cl	100%	-	-	n	n	+	+	-	-	-	n	+	1
Chloroform	$CHCl_3$	100%	-	-	o	+	+	+	-	-	o	-	+	2
Chlorohydrin	C_3H_5OCl	100%	-	n	+	-	+	+	o	-	+	+	+	3
Chloroprene => Chlorobutadiene														
Chlorosulphonic Acid	$SO_2(OH)Cl$	100%	-	o	-	+	-	-	-	-	-	-	o	1
Chrome-alum => Potassium Chrome Sulphate														
Chromic Acid	H_2CrO_4	50%	-	+*	o	+	10%	+	-	o	o	+	10%	3
Chromic-Sulphuric Acid	$K_2CrO_4 + H_2SO_4$	s	-	+*	-	+	n	n	n	-	-	-	n	3
Chromium Sulphate	$Cr_2(SO_4)_3$	s	+	+	+	+	+	+	+	+	+	+	+	1
Citric Acid	$C_6H_8O_7$	s	+	+	+	+	+	+	+	+	+	+	+	1
Cobalt Chloride	$CoCl_2$	s	+	+	+	+	-	+	+	+	+	+	+	2

ProMinent® Chemical Resistance List

Chemical	Formula	Conc	Acryl	PVC	PP	PVDF	1.4404	FPM	EPDM	Tygon	PharMed	PE	HastelloyC	WPC
Copper-II-Acetate	$Cu(CH_3COO)_2$	s	+	+	+	+	+	+	+	+	+	+	+	3
Copper-II-Arsenite	$Cu_3(AsO_3)_2$	s	+	+	+	+	+	+	+	+	+	+	+	3
Copper-II-Carbonate	$CuCO_3$	s	+	+	+	+	+	+	+	+	+	+	+	2
Copper-II-Chloride	$CuCl_2$	s	+	+	+	+	1%	+	+	+	+	+	+	2
Copper-II-Cyanide	$Cu(CN)_2$	s	+	+	+	+	+	+	+	+	+	+	+	(3)
Copper-II-Fluoride	CuF_2	s	+	+	+	+	+	+	+	+	+	+	+	(2)
Copper-II-Nitrate	$Cu(NO_3)_2$	s	+	+	+	+	+	+	+	+	+	+	+/o	2
Copper-II-Sulphate	$CuSO_4$	s	+	+	+	+	+	+	+	+	+	+	+	2
Cresols	$C_6H_4CH_3OH$	100%	o	o	+	+	+	+	-	-	-	+	+	2
Crotonaldehyde	$CH_3C_2H_2CHO$	100%	n	-	+	+	+	-	+	-	-	+	+	3
Cubic Nitre => Sodium Nitrate														
Cumene => Isopropyl Benzene														
Cyclo Hexane	C_6H_{12}	100%	+	-	+	+	+	+	-	-	-	+	o	1
Cyclohexanole	$C_6H_{11}OH$	100%	o	+/o	+	+	+	+	-	-	-	+	+	1
Cyclohexanone	$C_6H_{10}O$	100%	-	-	+	-	+	-	+/o	-	-	+	+	1
Cyclohexyl Alcohol => Cyclohexanol														
Cyclohexylamine	$C_6H_{11}NH_2$	100%	n	n	n	n	+	-	n	n	n	n	+	2
Decahydronaphthaline	$C_{10}H_{18}$	100%	-	+/o	o	+	n	o	-	-	-	o	+	2
Decaline => Decahydronaphthalene														
Dextrose => Glucose														
Diacetonalcohol	$C_6H_{12}O_2$	100%	-	-	+	o	+	-	+	-	-	+	+	1
Dibromoethane	$C_2H_4Br_2$	100%	-	-	n	+	+	+	-	-	-	-	+	3
Dibutyl Ether	$C_4H_9OC_4H_9$	100%	-	-	+	+	+	-	o	-	-	+	+	2
Dibutyl Phthalate	$C_{16}H_{22}O_4$	100%	-	-	+	+	+	+	+/o	o	+	o	+	2
Dibutylamine	$(C_4H_9)_2NH$	100%	n	n	+	+	+	-	-	n	n	+	+	1
Dichloro Acetic Acid	$Cl_2CHCOOH$	100%	-	+	+	+	+	-	+	-	o	+	+	1
Dichloro Benzene	$C_6H_4Cl_2$	100%	-	-	o	+	+	+	-	-	-	o	+	2
Dichloro Butan	$C_4H_8Cl_2$	100%	-	-	o	+	+	+	-	-	-	o	+	3
Dichloro Butene	$C_4H_6Cl_2$	100%	-	-	o	+	+	o	-	-	-	o	+	3
Dichloro Ethane	$C_2H_4Cl_2$	100%	-	-	o	+	+	+	-	-	o	-	+	3
Dichloro Ethylene	$C_2H_2Cl_2$	100%	-	-	o	+	+	o	-	-	o	-	+	2
Dichloro Methane	CH_2Cl_2	100%	-	-	o	o	o	+	-	-	o	-	+	2
Dichloroisopropyl Ether	$(C_3H_6Cl)_2O$	100%	-	-	o	n	+	o	o	-	-	o	+	(2)
Dicyclohexylamine	$(C_6H_{12})_2NH$	100%	-	-	o	n	+	-	-	-	-	o	+	2
Diethyleneglycol	$C_4H_{10}O_3$	s	+	+	+	+	+	+	+	+	+	+	+	1
Diethyleneglycolethyl Ether	$C_8H_{18}O_3$	100%	n	n	+	+	+	n	+/o	-	o	+	+	1
Diethylether	$C_2H_5OC_2H_5$	100%	-	-	o	+	+	-	-	-	o	o	+	1
Diglycolic Acid	$C_4H_6O_5$	30%	+	+	+	+	+	+	n	+	+/o	+	+	3
Dihexyl Phthalate	$C_{20}H_{26}O_4$	100%	-	-	+	+	+	-	n	o	+	+	+	(1)
Diisobutylketone	$C_9H_{18}O$	100%	-	-	+	+	+	-	+	-	-	+	+	1
Di-iso-nonyl Phthalate	$C_{26}H_{42}O_4$	100%	-	-	+	+	+	n	n	o	+	+	+	1
Diisopropylketone	$C_7H_{14}O$	100%	-	-	+	+	+	-	+	-	-	+	+	1
Dimethyl Carbonate	$(CH_3O)_2CO$	100%	n	n	+	+	+	+	-	n	n	+	+	1
Dimethyl Ketone => Acetone														
Dimethyl Phthalate	$C_{10}H_{10}O_4$	100%	-	-	+	+	+	-	+/o	o	+	+	+	1
Dimethylformamide	$HCON(CH_3)_2$	100%	-	-	+	-	+	-	+	-	+/o	+	+	1
Dimethylhydrazine	$H_2NN(CH_3)_2$	100%	n	n	+	n	+	-	+	n	n	+	+	3
Dioctyl Phthalate	$C_4H_4(COOC_8H_{17})_2$	100%	-	-	+	+	+	-	+/o	o	+	+	+	1
Dioxane	$C_4H_8O_2$	100%	-	-	o	-	+	-	+/o	-	-	+	+	1
Disodium Hydrogenphosphate	Na_2HPO_4	s	+	+	+	+	+	+	+	+	+	+	+	1
Disulfur Acid -- Oleum														
Disulphur Dichloride	S_2Cl_2	100%	n	n	n	+	n	+	-	-	-	n	n	
DMF => Dimethylformamide														
Engine Oils		100 %	n	+/o	+	+	+	+	-	-	-	+	+	2
Epsom salts => Magnesium Sulphate														
Ethanol	C_2H_5OH	100%	-	+	+	+	+	-	+	-	+	+	+	1
Ethanol Amine	$HOC_2H_4NH_2$	100%	o	n	+	-	+	-	+/o	-	o	+	+	1
Ethyl Acetate	$CH_3COOC_2H_5$	100%	-	-	35%	+	+	-	+/o	-	+/o	+	+	1
Ethyl Acrylate	$C_2H_3COOC_2H_5$	100%	-	-	+	o	+	-	+/o	-	-	+	+	2
Ethyl Benzene	C_6H_5-C_2H_5	100%	-	-	o	+	+	o	-	-	-	o	+	1
Ethyl Benzoate	$C_6H_5COOC_2H_5$	100%	n	-	+	o	+	+	-	-	-	+	+	1
Ethyl Bromide	C_2H_5Br	100%	-	n	+	+	n	+	-	-	o	+	+	2
Ethyl Chloroacetate	$ClCH_2COOC_2H_5$	100%	-	o	+	+	+	+	-	-	-	+	+	2
Ethyl Chlorocarbonate	$ClCO_2C_2H_5$	100%	n	n	n	n	n	+	-	n	n	n	n	(2)
Ethyl Cyclopentane	$C5H_4C_2H_5$	100%	+	+	+	+	+	+	-	-	-	+	+	(1)

ProMinent® Chemical Resistance List

Chemical	Formula	Conc	Acryl	PVC	PP	PVDF	1.4404	FPM	EPDM	Tygon	PharMed	PE	HastelloyC	WPC
Ethylacetoacetate	$C_6H_{10}O_3$	100%	n	-	+	+	+	-	+/o	-	+/o	+	+	1
Ethylacrylic Acid	C_4H_7COOH	100%	n	n	+	+	+	n	+/o	n	n	+	+	(1)
Ethylene Diamine	$(CH_2NH_2)_2$	100%	o	o	+	-	o	-	+	n	n	+	o	2
Ethylene Dibromide => Dibromoethane														
Ethylene Dichloride => Dichloro Ethane														
Ethylene Glycol => Glycol														
Ethylenglycol Ethylether	$HOC_2H_4OC_2H_5$	100%	n	n	+	+	+	n	+/o	-	o	+	+	1
Ethylhexanol	$C_8H_{16}O$	100%	n	+/o	+	+	+	+	+	-	-	+	+	2
Fatty Acids	R-COOH	100%	+	+	+	+	+	+	o	-	o	+	+	1
Ferric Chloride	$FeCl_3$	s	+	+	+	+	-	+	+	+	+	+	+/o	1
Ferric Nitrate	$Fe(NO_3)_3$	s	+	+	+	+	+	+	+	+	+	+	+	1
Ferric Phosphate	$FePO_4$	s	+	+	+	+	+	+	+	+	+	+	+	1
Ferric Sulphate	$Fe_2(SO_4)_3$	s	+	+	+	+	o	+	+	+	+	+	+	1
Ferrous Chloride	$FeCl_2$	s	+	+	+	+	-	+	+	+	+	+	+/o	1
Ferrous Sulphate	$FeSO_4$	s	+	+	+	+	+	+	+	+	+	+	+	1
Fixing Salt => Sodium Thiosulphate														
Fluoro Benzene	C_6H_5F	100%	-	-	+	+	+	o	-	-	-	o	+	2
Fluoroboric Acid	HBF_4	35%	+	+	+	+	o	+	+	+	-	+	+	1
Fluorosilicic Acid	H_2SiF_6	100%	+	30%	30%	+	o	+	+	25%	o	40%	+/o	2
Formaldehyde	CH_2O	40%	+	+	+	+	+	-	+/o	-	-	+	+	2
Formalin => Formaldehyde														
Formamide	$HCONH_2$	100%	+	-	+	+	+	+	+	n	n	+	+	1
Formic Acid	HCOOH	s	-	+/o	+	+	+	-	-	+/o	+/o	+	+	1
Furane	C_4H_4O	100%	-	-	+	-	+	-	n	-	-	+	+	3
Furane Aldehyde	$C_5H_5O_2$	100%	n	n	n	o	+	-	+/o	-	-	n	n	2
Furfuryl Alcohol	$OC_4H_3CH_2OH$	100%	-	-	+	o	+	n	+/o	-	-	+	+	1
Gallic Acid	$C_6H_2(OH)_3COOH$	5%	+	+	+	+	+	+	+/o	+	+	+	+	1
Gasoline		100 %	-	-	+	+	+	+	-	-	-	+	+	2
Glauber´s Salt => Sodium Sulphate														
Glucose	$C_6H_{12}O_6$	s	+	+	+	+	+	+	+	+	+	+	+	1
Glycerol	$C_3H_5(OH)_3$	100%	+	+	+	+	+	+	+	+	+	+	+	1
Glycerol Triacetate	$C_3H_5(CH_3COO)_3$	100%	n	n	+	+	+	-	+	n	n	+	+	1
Glycine	NH_2CH_2COOH	10%	+	+	+	+	+	+	+	+	+	+	+	1
Glycol	$C_2H_4(OH)_2$	100%	+	+	+	+	+	+	+	+	+	+	+	1
Glycolic Acid	$CH_2OHCOOH$	70%	+	37%	+	+	+	+	+	+	+/o	+	+	1
Gypsum => Calcium Sulphate														
Heptane	C_7H_{16}	100%	+	+	+	+	+	+	-	-	-	+	+	1
Hexachloroplatinic Acid	H_2PtCl_6	s	n	+	+	+	-	n	+	n	n	+	-	
Hexanal	$C_5H_{11}CHO$	100%	n	n	+	+	+	-	+/o	-	-	+	+	1
Hexane	C_6H_{14}	100%	+	+	+	+	+	+	-	-	-	+	+	1
Hexanol	$C_6H_{13}OH$	100%	-	-	+	+	+	n	+	-	o	+	+	1
Hexantriol	$C_6H_9(OH)_3$	100%	n	n	+	+	+	+	+	n	n	+	+	1
Hexene	C_6H_{12}	100%	n	+	+	+	+	+	-	-	-	+	+	1
Hydrazine Hydrate	$N_2H_4 * H_2O$	s	+	+	+	+	+	n	+	-	o	+	+	3
Hydrobromic Acid	HBr	50%	+	+	+	+	-	-	+	+	-	+	o	1
Hydrochloric Acid	HCl	38%	32%	+ *	+	+	-	+	o	+	o	+	o	1
Hydrofluoric Acid	HF	80%	-	40% *	40% **	+	-	+	o	40%	-	40%	+/o	1
Hydrogen Cyanide	HCN	s	+	+	+	+	+	+	+	+	+	+	+	3
Hydrogen Peroxide	H_2O_2	90%	40%	40%*	30%	+	+	30%	30%	30%	+	+	+	1
Hydroiodic Acid	HI	s	+	+	+	+	-	-	n	+	-	+	n	1
Hydroquinone	$C_6H_4(OH)_2$	s	o	+	+	+	+	+	-	+	+/o	+	+	2
Hydroxylamine Sulphate	$(NH_2OH)_2 * H_2SO_4$	10%	+	+	+	+	+	+	+	+	+	+	+	2
Hypochlorous Acid	HOCl	s	+	+	o	+	-	+	+/o	+	+	o	+	(1)
Iodine	I_2	s	o	-	+	+	-	+	+/o	+	+	o	+/o	
Iron Vitriol => Ferrous Sulphate														
Isobutanol => Isobutyl Alcohol														
Isobutyl Alcohol	$C_2H_5CH(OH)CH_3$	100%	-	+	+	+	+	+	+	-	o	+	+	1
Isopropanol => Isopropyl Alcohol														
Isopropyl Acetate	$CH_3COOCH(CH_3)_2$	100%	-	-	+	+	+	-	+/o	-	+/o	+	+	1
Isopropyl Alcohol	$(CH_3)_2CHOH$	100%	-	+/o	+	+	+	+	+	-	o	+	+	1
Isopropyl Benzene	$C_6H_5CH(CH_3)_2$	100%	-	-	o	+	+	+	-	-	-	o	+	1
Isopropyl Chloride	$CH_3CHClCH_3$	80%	-	-	o	+	+	+	-	-	o	o	+/o	2
Isopropyl Ether	$C_6H_{14}O$	100%	-	-	o	+	+	-	-	-	o	o	+	1
Kitchen Salt => Sodium Chloride														
Lactic Acid	$C_3H_6O_3$	100%	-	+	+	+	+/o	+	10%	-	+/o	+	+	1

ProMinent® Chemical Resistance List

Chemical	Formula	Conc	Acryl	PVC	PP	PVDF	1.4404	FPM	EPDM	Tygon	PharMed	PE	HastelloyC	WPC
Lead Acetate	$Pb(CH_3COO)_2$	s	+	+	+	+	+	+	+	+	+	+	+	2
Lead Nitrate	$Pb(NO_3)_2$	50%	+	+	+	+	+	+	+	+	+	+	+	2
Lead Sugar => Lead Acetate														
Lead Sulphate	$PbSO_4$	s	+	+	+	+	+	+	+	+	+	+	+	(2)
Lead Tetraethyl	$Pb(C_2H_5)_4$	100%	+	+	+	+	+	+	-	n	n	+	+	3
Lime Milk => Calcium Hydroxide														
Liquid Ammonia => Ammonium Hydroxide														
Lithium Bromide	LiBr	s	+	+	+	+	+	+	+	+	+	+	+	1
Lithium Chloride	LiCl	s	+	+	+	+	-	+	+	+	+	+	n	1
Lunar Caustic => Silver Nitrate														
Magnesium Carbonate	$MgCO_3$	s	+	+	+	+	+	+	+	+	+	+	+/o	1
Magnesium Chloride	$MgCl_2$	s	+	+	+	+	o	+	+	+	+	+	+	1
Magnesium Hydroxide	$Mg(OH)_2$	s	+	+	+	+	+	+	+	+	+	+	+	1
Magnesium Nitrate	$Mg(NO_3)_2$	s	+	+	+	+	+	+	+	+	+	+	+	1
Magnesium Sulphate	$MgSO_4$	s	+	+	+	+	+	+	+	+	+	+	+/o	1
Maleic Acid	$C_4H_4O_4$	s	+	+	+	+	+	+	+	-	o	+	+	1
Malic Acid	$C_4H_6O_5$	s	+	+	+	+	+	+	+	+	+	+	+	1
Manganese-II-Chloride	$MnCl_2$	s	+	+	+	+	-	+	+	+	+	+	+	1
Manganese-II-Sulphate	$MnSO_4$	s	+	+	+	+	+	+	+	+	+	+	+	1
MEK => Methyl Ethyl Ketone														
Mercury	Hg	100%	+	+	+	+	+	+	+	+	+	+	+	3
Mercury-II-Chloride	$HgCl_2$	s	+	+	+	+	-	+	+	+	+	+	+	3
Mercury-II-Cyanide	$Hg(CN)_2$	s	+	+	+	+	+	+	+	+	+	+	+	3
Mercury-II-Nitrate	$Hg(NO_3)_2$	s	+	+	+	+	+	+	+	+	+	+	+	3
Mesityl Oxide	$C_6H_{10}O$	100%	-	-	n	n	+	-	+/o	-	-	n	+	1
Methacrylic Acid	C_3H_5COOH	100%	n	n	+	+	+	o	+/o	-	+/o	+	+	1
Methanol	CH_3OH	100%	-	-	+	+	+	o	+	-	+/o	+	+	1
Methoxybutanol	$CH_3O(CH_2)_4OH$	100%	-	-	+	+	+	+	o	-	o	+	+	(1)
Methyl Acetate	CH_3COOCH_3	60%	-	-	+	+	+	-	+/o	-	+/o	+	+	2
Methyl Acrylate	$C_2H_3COOCH_3$	100%	-	-	+	+	+	-	+/o	-	o	+	+	2
Methyl Benzoate	$C_6H_5COOCH_3$	100%	-	-	+	o	+	+	-	-	-	+	+	2
Methyl Catechol	$C_6H_3(OH)_2CH_3$	s	+	+	+	+	+	+	-	+	+o	+	+	(1)
Methyl Cellulose		s	+	+	+	+	+	+	+	+	+	+	+	1
Methyl Chloroacetate	$ClCH_2COOCH_3$	100%	-	o	+	+	+	o	-	-	-	+	+	2
Methyl Cyclopentane	$C_5H_9CH_3$	100%	+	+	+	+	+	+	-	-	-	+	+	(1)
Methyl Dichloroacetate	$Cl_2CHCOOCH_3$	100%	-	-	+	n	+	-	n	-	-	+	+	2
Methyl Ethyl Ketone	$CH_3COC_2H_5$	100%	-	-	+	-	+	-	+	-	-	+	+	1
Methyl Glycol	$C_3H_8O_2$	100%	+	+	+	+	+	-	+/o	+	+	+	+	1
Methyl Isobutyl Ketone	$CH_3COC_4H_9$	100%	-	-	+	-	+	-	o	-	-	+	+	1
Methyl Isopropyl Ketone	$CH_3COC_3H_7$	100%	-	-	+	-	+	-	+/o	-	-	+	+	1
Methyl Methacrylate	$C_3H_5COOCH_3$	100%	-	-	+	+	+	-	-	-	-	+	+	1
Methyl Oleate	$C_{17}H_{33}COOCH_3$	100%	n	n	+	+	+	+	+/o	n	n	+	+	1
Methyl Salicylate	$HOC_6H_4COOCH_3$	100%	-	-	+	+	+	n	+/o	-	-	+	+	1
Methylacetyl Acetate	$C_5H_8O_3$	100%	-	-	+	+	+	-	+/o	-	o	+	+	2
Methylamine	CH_3NH_2	32%	+	o	+	o	+	-	+	+	+	+	+	2
Methylene Chloride => Dichloro Methane														
Mirabilit => Sodium Sulphate														
Morpholine	C_4H_9ON	100%	-	-	+	-	+	n	n	-	-	+	+	2
Muriatic Acid => Hydrochloric Acid														
Natron => Sodium Bicarbonate														
Nickel-II-Acetate	$(CH_3COO)_2Ni$	s	+	+	+	+	+	-	+	+	+	+	+	(2)
Nickel-II-Chloride	$NiCl_2$	s	+	+	+	+	-	+	+	+	+	+	+	2
Nickel-II-Nitrate	$Ni(NO_3)_2$	s	+	+	+	+	+	+	+	+	+	+	+/o	2
Nickel-II-Sulphate	$NiSO_4$	s	+	+	+	+	+	+	+	+	+	+	+/o	2
Nitrate of Lime => Calcium Nitrate														
Nitric Acid	HNO_3	99%	10%	10%*	50%	65%	50%	65%	10%	35%	35%	50%	65%	1
Nitro Methane	CH_3NO_2	100%	-	-	+	o	+	-	+/o	-	-	+	+	2
Nitro Propane	$(CH_3)_2CHNO_2$	100%	-	-	+	n	+	-	+/o	-	-	+	+	2
Nitro Toluene	$C_6H_4NO_2CH_3$	100%	-	-	+	+	+	o	-	-	-	+	+	2
Octane	C_8H_{18}	100%	o	+	+	+	+	+	-	-	-	+	+	1
Octanol	$C_8H_{17}OH$	100%	-	-	+	+	+	+	+	-	-	+	+	1
Octyl Cresol	$C_15H_{24}O$	100%	-	-	+	+	+	o	n	-	-	+	+	(1)
Oil => Engine Oils														
Oleum	$H_2SO_4 + SO_3$	s	n	-	-	-	+	+	-	+	+	-	+	2
Orthophosphoric Acid => Phosphoric Acid														

ProMinent® Chemical Resistance List

Chemical	Formula	Conc	Acryl	PVC	PP	PVDF	1.4404	FPM	EPDM	Tygon	PharMed	PE	HastelloyC	WPC
Oxalic Acid	$(COOH)_2$	s	+	+	+	+	10%	+	+	+/o	+/o	+	+/o	1
Pentane	C_5H_{12}	100%	+	+	+	+	+	+	-	-	-	+	+	1
Pentanol => Amyl Alcohol														
Perchloric Acid	$HClO_4$	70%	n	10%	10%	+	-	+	+/o	o	+	+	n	1
Perchloroethylene => Tetrachloro Ethylene														
Perhydrol => Hydrogen Peroxide														
Petroleum Ether	CnH_{2n+2}	100%	+	+/o	+	+	+	+	-	-	-	+	+	1
Phenole	C_6H_5OH	100%	-	-	+	+	+	+	-	10%	+	+	+	2
Phenyl Ethyl Ether	$C_6H_5OC_2H_5$	100%	-	-	+	n	+	-	-	-	-	+	+	2
Phenyl Hydrazine	$C_6H5NHNH_2$	100%	-	-	o	+	+	o	-	-	-	o	+	2
Phosphoric Acid	H_3PO_4	85%	50%	+	+	+	+	+	+	+	+	+	+	1
Phosphorous Oxychloride	$POCl_3$	100%	-	-	+	+	n	+	+	n	n	+	+	1
Phosphorous Trichloride	PCl_3	100%	-	-	+	+	+	o	+	+	+/o	+	+	1
Phthalic Acid	$C_6H_4(COOH)_2$	s	+	+	+	+	+	+	+	-	+	+	+	1
Picric Acid	$C_6H_2(NO_3)_3OH$	s	+	+	+	+	+	+	+	+	-	+	+	2
Piperidine	$C_5H_{11}N$	100%	-	-	n	n	+	-	-	-	-	n	+	2
Potash Alum => Potassium Aluminium Sulphate														
Potassium Acetate	CH_3COOK	s	+	+	+	+	+	+	+	+	+	+	+	1
Potassium Aluminium Sulphate	$KAl(SO_4)_2$	s	+	+	+	+	+	+	+	+	+	+	+	1
Potassium Bicarbonate	$KHCO_3$	40%	+	+	+	+	+	+	+	+	+	+	+/o	1
Potassium Bifluoride	KHF_2	s	n	+	+	+	+	+	+	+	+	+	+	1
Potassium Bisulphate	$KHSO_4$	5%	+	+	+	+	+	+	+	+	+	+	+	1
Potassium Bitartrate	$KC_4H_5O_6$	s	+	+	+	+	+	+	+	+	+	+	+	1
Potassium Borate	KBO_2	s	+	+	+	+	+	+	+	+	+	+	+	(1)
Potassium Bromate	$KBrO_3$	s	+	+	+	+	+	+	+	+	+	+	+	2
Potassium Bromide	KBr	s	+	+	+	+	10%	+	+	+	+	+	0,1	1
Potassium Carbonate	K_2CO_3	s	+	+	+	+	+	+	+	55%	55%	+	+	1
Potassium Chlorate	$KClO_3$	s	+	+	+	+	+	+	+	+	+	+	+	2
Potassium Chloride	KCl	s	+	+	+	+	-	+	+	+	+	+	+/o	1
Potassium Chromate	K_2CrO_4	10%	+	+	+	+	+	+	+	+	+	+	+	3
Potassium Chrome Sulphate	$KCr(SO_4)_2$	s	+	+	+	+	+	+	+	+	+	+	+	1
Potassium Cyanate	KOCN	s	+	+	+	+	+	+	+	+	+	+	+	2
Potassium Cyanide	KCN	s	+	+	+	+	5%	+	+	+	+	+	5%	3
Potassium Cyanoferrate II	$K_4Fe(CN)_6$	s	+	+	+	+	+	+	+	+	+	+	+	1
Potassium Cyanoferrate III	$K_3Fe(CN)_6$	s	+	+	+	+	+	+	+	+	+	+	+	1
Potassium Dichromate	$K_2Cr_2O_7$	s	+	+	+	+	25%	+	+	+	+	+	10%	3
Potassium Fluoride	KF	s	+	+	+	+	+	+	+	+	+	+	+	1
Potassium Hydroxyde	KOH	50%	+	+	+	+ (25 °C)	+	-	+	10%	10%	+	+	1
Potassium Iodide	KI	s	+	+	+	+	+	+	+	+	+	+	+	1
Potassium Nitrate	KNO_3	s	+	+	+	+	+	+	+	+	+	+	+	1
Potassium Perchlorate	$KClO_4$	s	+	+	+	+	n	+	+	+	+	+	+	1
Potassium Permanganate	$KMnO_4$	s	+	+	+	+	+	+	+	6%	6%	+	+	2
Potassium Persulphate	$K_2S_2O_8$	s	+	+	+	+	+	+	+	+	+	+	+	1
Potassium Phosphate	KH_2PO_4	s	+	+	+	+	+	+	+	+	+	+	+	1
Potassium Pyrochromate => Potassium Dichromate														
Potassium Sulphate	K_2SO_4	s	+	+	+	+	+	+	+	+	+	+	+	1
Potassium Sulphite	K_2SO_3	s	+	+	+	+	+	+	+	+	+	+	+	1
Propionic Acid	C_2H_5COOH	100%	o	+	+	+	+	+	+	-	+/o	+	+	1
Propionitrile	CH_3CH_2CN	100%	n	n	+	+	+	+	-	-	-	+	+	2
Propyl Acetate	$CH_3COOC_3H_7$	100%	-	-	+	+	+	-	+/o	-	-	+	+	1
Propylene Glycol	$CH_3CHOHCH_2OH$	100%	+	+	+	+	+	+	+	+	+	+	+	1
Prussic Acid => Hydrogen Cyanide														
Pyridine	C_5H_5N	100%	-	-	o	-	+	-	-	-	o	+	+	2
Pyrrole	C_4H_4NH	100%	n	n	+	n	+	-	-	-	-	+	+	2
Roman Vitriol => Copper Sulphate														
Salicylic Acid	HOC_6H_4COOH	s	+	+	+	+	+	+	+	+	+	+	+/o	1
Salmiac => Ammonium Chloride														
Saltpeter => Potassium Nitrate														
Silic Acid	SiO_2 * x H_2O	s	+	+	+	+	+	+	+	+	+	+	+	1
Silver Bromide	AgBr	s	+	+	+	+	+/o	+	+	+	+	+	+	1
Silver Chloride	AgCl	s	+	+	+	+	-	+	+	+	+	+	+/o	1
Silver Nitrate	$AgNO_3$	s	+	+	+	+	+	+	+	+	+	+	+/o	3
Slaked Lime => Calcium Hydroxide														
Soda => Sodium Carbonate														
Sodium Acetate	$NaCH_3COO$	s	+	+	+	+	+	+	+	+	+	+	+	1

ProMinent® Chemical Resistance List

Chemical	Formula	Conc	Acryl	PVC	PP	PVDF	1.4404	FPM	EPDM	Tygon	PharMed	PE	HastelloyC	WPC
Sodium Benzoate	C_6H_5COONa	s	+	+	+	+	+	+	+	+	+	+	+	1
Sodium Bicarbonate	$NaHCO_3$	s	+	+	+	+	+	+	+	+	+	+	+	1
Sodium Bisulphate	$NaHSO_4$	s	+	+	+	+	+	+	+	+	+	+	+	1
Sodium Bisulphite	$NaHSO_3$	s	+	+	+	+	+	+	+	+	+	+	+	1
Sodium Borate	$NaBO_2$	s	+	+	+	+	+	+	+	+	+	+	+	1
Sodium Bromate	$NaBrO_3$	s	+	+	+	+	+	+	+	+	+	+	+	3
Sodium Bromide	NaBr	s	+	+	+	+	+	+	+	+	+	+	+	1
Sodium Carbonate	Na_2CO_3	s	+	+	+	+	+/o	+	+	+	+	+	+	1
Sodium Chlorate	$NaClO_3$	s	+	+	+	+	+	+	+	+	+	+	+	2
Sodium Chloride	NaCl	s	+	+	+	+	-	+	+	+	+	+	+	1
Sodium Chlorite	$NaClO_2$	24%	+	+	+	+	10%	+	+	+	+	+	10%	2
Sodium Chromate	Na_2CrO_4	s	+	+	+	+	+	+	+	+	+	+	+	3
Sodium Cyanide	NaCN	s	+	+	+	+	+	+	+	+	+	+	+	3
Sodium Dichromate	$Na_2Cr_2O_7$	s	+	+	+	+	+	+	+	+	+	+	+	3
Sodium Dithionite	$Na_2S_2O_4$	s	+	10%	10%	+	+	n	n	+	+	10%	+/o	1
Sodium Fluoride	NaF	s	+	+	+	+	10%	+	+	+	+	+	+	1
Sodium Hydrogen Sulphate => Sodium Bisulphate														
Sodium Hydroxide	NaOH	50%	+	+	+	+ (60%/ 25 °C)	+	-	+	10%	30%	+	+	1
Sodium Hypochlorite	NaOCl + NaCl	12%	+	+	o	+	-	+	+	+	+	o	> 10%	2
Sodium Iodide	NaI	s	+	+	+	+	+	+	+	+	+	+	+	1
Sodium Metaphosphate	$(NaPO_3)_n$	s	+	+	+	+	+	+	+	+	+	+	+	1
Sodium Nitrate	$NaNO_3$	s	+	+	+	+	+	+	+	+	+	+	+	1
Sodium Nitrite	$NaNO_2$	s	+	+	+	+	+	+	+	+	+	+	+	2
Sodium Oxalate	$Na_2C_2O_4$	s	+	+	+	+	+	+	+	+	+	+	+	1
Sodium Perborate	$NaBO_2{*}H_2O_2$	s	+	+/o	+	+	+	+	+	+	+	+	+/o	1
Sodium Perchlorate	$NaClO_4$	s	+	+	+	+	10%	+	+	+	+	+	10%	1
Sodium Peroxide	Na_2O_2	s	+	+	+	+	+	+	+	n	n	-	+	1
Sodium Persulphate	$Na_2S_2O_8$	s	n	+	+	+	+	+	+	+	+	+	+	1
Sodium Pyrosulphite	$Na_2S_2O_5$	s	+	+	+	+	+	n	n	+	+	+	+	1
Sodium Salicylate	$C_6H_4(OH)COONa$	s	+	+/o	+	+	+	+	+	+	+	+	+	1
Sodium Silicate	Na_2SiO_3	s	+	+	+	+	+	+	+	+	+	+	+	1
Sodium Sulphate	Na_2SO_4	s	+	+	+	+	+	+	+	+	+	+	+	1
Sodium Sulphide	Na_2S	s	+	+	+	+	+	+	+	+	+	+	+	2
Sodium Sulphite	Na_2SO_3	s	+	+	+	+	50%	+	+	+	+	+	50%	1
Sodium Tetraborate	$Na_2B_4O_7 * 10\ H_2O$	s	+	+	+	+	+	+	+	+	+	+	+	1
Sodium Thiosulphate	$Na_2S_2O_3$	s	+	+	+	+	25%	+	+	+	+	+	25%	1
Sodium Tripolyphosphate	$Na_5P_3O_{10}$	s	+	+	+	+	+	+/o	+	+	+	+	+	1
Starch	$(C_6H_{10}O_5)_n$	s	+	+	+	+	+	+	n	+	+	+	+	1
Starch Gum		s	+	+	+	+	+	+	+	+	+	+	+	1
Styrene	$C_6H_5CHCH_2$	100%	-	-	o	+	+	o	-	-	-	o	+	2
Sublimate => Mercury-II-Chloride														
Succinic Acid	$C_4H_6O_4$	s	+	+	+	+	+	+	+	+	+	+	+	1
Sugar Syrup		s	+	+	+	+	+	+	+	+	+	+	+	1
Sulphur Chloride => Disulphur Dichloride														
Sulphuric Acid	H_2SO_4	98%	30%	50%	85%	+	20%	+	+	30%	30%	80%	+	1
Sulphuric Acid, fuming --> Oleum														
Sulphurous Acid	H_2SO_3	s	+	+	+	+	10%	+	+	+	+	+	+	(1)
Sulphuryl Chloride	SO_2Cl_2	100%	-	-	-	o	n	+	o	-	-	-	n	1
Tannic Acid	$C_{76}H_{52}O_{46}$	50%	+	+	+	+	+	+	+	+	+	+	+	1
Tartaric Acid	$C_4H_6O_6$	s	50%	+	+	+	+	+	+/o	+	+	+	+	1
Tetrachloro Ethane	$C_2H_2Cl_4$	100%	-	-	o	+	+	o	-	-	o	o	+	3
Tetrachloro Ethylene	C_2Cl_4	100%	-	-	o	+	+	o	-	-	o	o	+	3
Tetrachloromethane => Carbon Tetrachloride														
Tetrahydro Furane	C_4H_8O	100%	-	-	o	-	+	-	-	-	-	o	+	1
Tetrahydro Naphthalene	$C_{10}H_{12}$	100%	-	-	-	+	+	+	-	-	-	o	+	3
Tetralin => Tetrahydro Naphthalene														
THF => Tetrahydrofurane														
Thionyl Chloride	$SOCl_2$	100%	-	-	-	+	n	+	+	+	+	-	n	1
Thiophene	C_4H_4S	100%	n	-	o	n	+	-	-	-	-	o	+	3
Tin-II-Chloride	$SnCl_2$	s	+	o	+	+	-	+	+	+	+	+	+/o	1
Tin-II-Sulphate	$SnSO_4$	s	n	+	+	+	+	+	+	+	+	+	+/o	(1)
Tin-IV-Chloride	$SnCl_4$	s	n	+	+	+	-	+	+	+	+	+	+	1
Titanium Tetrachloride	$TiCl_4$	100%	n	n	n	+	n	o	-	n	n	n	n	1
Toluene	$C_6H_5CH_3$	100%	-	-	o	+	+	o	-	-	-	o	+	2

ProMinent® Chemical Resistance List

Chemical	Formula	Conc	Acryl	PVC	PP	PVDF	1.4404	FPM	EPDM	Tygon	PharMed	PE	HastelloyC	WPC
Toluene Diisocyanate	$C_7H_3(NCO)_2$	100%	n	n	+	+	+	-	+/o	n	n	+	+	2
Tributyl Phosphate	$(C_4H_9)_3PO_4$	100%	n	-	+	+	+	-	+	o	+	+	+	1
Trichloro Ethane	CCl_3CH_3	100%	-	-	o	+	+	+	-	-	o	o	+	3
Trichloro Ethylene	C_2HCl_3	100%	-	-	o	+	+/o	o	-	-	o	o	+	3
Trichloro Methane => Chloroform														
Trichloroacetaldehyde Hydrate	$CCl_3CH(OH)_2$	s	-	-	o	-	+	o	o	n	n	+	+	2
Trichloroacetic Acid	CCl_3COOH	50%	-	+	+	+	-	-	o	+	+/o	+	+	1
Tricresyl Phosphate	$(C_7H_7)_3PO_4$	90%	-	-	+	n	+	o	+	o	+	+	+	2
Triethanol Amine	$N(C_2H_4OH)_3$	100%	+	o	+	n	+	-	+/o	-	o	+	+	1
Trilene => Trichloro Ethane														
Trioctyl Phosphate	$(C_8H_{17})_3PO_4$	100%	n	-	+	+	+	o	+	o	+	+	+	2
Trisodium Phosphate	Na_3PO_4	s	+	+	+	+	+	+	+	+	+	+	+	1
Urea	$CO(NH_2)_2$	s	+	+/o	+	+	+	+	+	20%	20%	+	+	1
Vinyl Acetate	$CH_2=CHOOCCH_3$	100%	-	-	+	+	+	n	n	-	+/o	+	+	2
Water Glass => Sodium Silicate														
Xylene	$C_6H_4(CH_3)_2$	100%	-	-	-	+	+	o	-	-	-	o	+	2
Zinc Acetate	$(CH_3COO)_2Zn$	s	+	+	+	+	+	-	+	+	+	+	+	1
Zinc Chloride	$ZnCl_2$	s	+	+	+	+	-	+	+	+	+	+	n	1
Zinc Sulphate	$ZnSO_4$	s	+	+	+	+	+	+	+	+	+	+	+/o	1

ProMinent® Chemical Resistance List

Overview of the resistance of soft PVC hoses (Guttasyn®) to the most common chemicals

This data applies to standard conditions (20 °C, 1013 mbar).

+	=	resistant
o	=	conditionally resistant
-	=	not resistant

The data has been taken from relevant manufacturers' literature and supplemented by our own tests and experience.As the resistance of a material also depends on other factors, especially pressure and operating conditions etc., this list should merely be regarded as an initial guide and does not claim to offer any guarantees. Take into consideration the fact the conventional dosing agents are largely compounds, the corrosiveness of which cannot simply be calculated by adding together the corrosiveness of each individual component. In cases such as these the material compatibility data produced by the chemical manufacturer must be read as a matter of priority when selecting a material. Safety data sheets do not provide this information and cannot therefore replace application-specific documentation.

Corrosive agent	Concentration in %	Temperature in °C	Evaluation
Acetic acid	50	20	o
Acetic acid (wine vinegar)		20	o
Acetic acid (wine vinegar)		40	o
Acetic acid anhydride	100	20	-
Acetic acid, aqueous	6	20	+
Acetic acid, aqueous	6	40	o
Acetic acid, aqueous	6	60	o
Acetic ester	100	20	-
Acetone	all	20	-
Acetylene	100	20	o
Acetylene chlorohydrin solution		20	-
Acetylene tetrabromide	100	20	-
Aluminium salts, aqueous	all	40	+
Aluminium sulphate, aqueous	all	60	+
Alums of all kinds, aqueous	all	40	+
Ammonium salts	all	60	+
Ammonium, aqueous	15	40	+
Ammonium, aqueous	saturated	40	+
Aniline	100	20	-
Benzene	100	20	-
Benzine	100	20	o
Bisulphite, aqueous	all	40	+
Bisulphite, aqueous	all	60	o
Borax solution	all	40	+
Borax solution	all	60	o
Boric acid, aqueous	all	60	+
Bromine, vaporous and liquid		20	+
Buna latex		20	+
Butadiene	100	20	-
Butanol	100	20	-
Butyl acetate	100	20	-
Butyric acid, aqueous	20	20	o
Butyric acid, aqueous	conc.	20	-
Calcium chloride, aqueous	all	60	+
Carbon disulphide	100	20	-
Carbonic acid	all	40	+
Caustic potash	aqueous	20	+
Caustic potash	6	40	+
Caustic potash	6	60	o
Caustic potash	15	20	+
Caustic potash	30	20	o
Caustic potash	conc.	20	o
Caustic potash	conc.	40	-
Chlorinated hydrocarbons	all	20	-
Chlorine, gaseous, moist	all	20	-

ProMinent® Chemical Resistance List

Corrosive agent	Concentration in %	Temperature in °C	Evaluation
Chloromethyl	100	20	-
Chrome-alum, aqueous	all	40	+
Chromic acid, aqueous	0,5-10	20	+
Copper sulphate, aqueous	all	60	+
Creosote		20	-
Dextrin, aqueous	saturated	60	+
Diesel oils, compressed oils	100	40	o
Diesel oils, compressed oils	100	60	-
Difluorodichloromethane	100	20	o
Ethanol	96	20	-
Ethyl acetate	100	20	-
Ethyl ether	100	20	-
Ethylene glycol	100	40	o
Ethylene glycol	100	60	-
Fats, animal and plant	100	20	-
Fats, aqueous suspension		20	o
Ferric chloride, aqueous	all		+
Fixing bands, phat.		40	+
Formaldehyde, aqueous	30	20	o
Glacial acetic acid	100		-
Glucose, aqueous	saturated	20	+
Glycerol	100	20	o
Glycol	100	20	o
Halogens	all	20	-
Hydrochloric acid, aqueous	10	20	+
Hydrogen bromide	all	40	+
Hydrogen peroxide	to 30	20	+
Hydrogen sulphide, gaseous	100	20	o
Hydrogen sulphide, gaseous	100	40	-
Ink		30	+
Lead acetate, aqueous		20	+
Lubricating oil, spindle oil and similar	100	40	o
Lubricating oil, spindle oil and similar	100	60	-
Magnesium salts, aqueous	all	60	+
Methyl alcohol	100	20	-
Methylene chloride	100	20	-
Monobromine-naphtaline	100	20	-
Nickel salts, aqueous	all	60	+
Nitric acid	aqueous	20	+
Nitric acid, aqueous	6.3	20	+
Nitric acid, aqueous	6.3	40	o
Nitric acid, aqueous	6.3	60	o
Nitric acid, aqueous	15	20	+
Nitric acid, aqueous	65	20	o
Nitric acid, aqueous	65	40	-
Nitrocellulose lacquer	solid	20	-
Nitroglycerol	100	20	-
Oils => fats, diesel oil, Lubricating oil and similar			
Oleum	10	20	-
Oxygen	all	60	+
Ozone		20	
Perchloric acid	all	20	o
Phenol, aqueous	all	20	o
Phosphoric acid, aqueous	100	20	-
PMMA (acrylic glass)	all	60	+
PMMA (acrylic glass)	Spec. additives		+
Potassium bichromate, aqueous	saturated	20	+
Potassium ferri- and ferrocyanide	all	60	+
Potassium persulphate, aqueous	saturated	40	+
Potassium salts, aqueous	all	60	+

ProMinent® Chemical Resistance List

Corrosive agent	Concentration in %	Temperature in °C	Evaluation
Sea water		40	+
Sea water		60	o
Silver nitrate	10	60	+
Soap solution	saturated	20	+
Soap solution	saturated	60	o
Sodium chloride, aqueous	all	60	+
Sodium hydroxide	aqueous	20	+
Sodium hydroxide, aqueous	4	40	+
Sodium hydroxide, aqueous	4	60	o
Sodium hydroxide, aqueous	50	40	o
Sodium hydroxide, aqueous	50	60	-
Sodium hypochlorite	15	20	o
Sodium salts => Sodium chloride (common salt)			
Stauffer grease	100	40	o
Sulphur dioxide, gaseous	all	40	o
Sulphuric acid	to 60	60	o
Sulphuric acid	98	20	-
Tetrachloromethane	100	20	-
Toluene	100	20	-
Transformer oil	100	40	o
Transformer oil	100	60	-
Trichloroethylene	100	20	-
Urea, aqueous	all	60	+
Urine		20	+
Water	100	20	+
Xylene	100	20	-
Zinc salts	all	60	+

ProMinent® Chemical Resistance List

1 Solenoid-Driven Metering Pumps

Contents **Page**

1.0 Overview Of Solenoid-Driven Metering Pumps 1
1.0.1 Product Overview 1
1.0.2 Selection Guide 3
1.0.3 Installation Option 5

1.1 alpha Motor Driven Diaphragm Metering Pumps 7
1.1.1 alpha Motor Driven Diaphragm Metering Pumps 7
1.1.2 Identcode Ordering System 9
1.1.3 Spare Parts Kits, Replacement Diaphragms 10

1.2 Beta® b Solenoid Diaphragm Metering Pumps 11
1.2.1 Beta® b Solenoid Diaphragm Metering Pumps 11
1.2.2 Identcode Ordering System 13
1.2.3 Spare Parts Kits, Replacement Diaphragms 14

1.3 gamma/ L Solenoid Diaphragm Metering Pumps 17
1.3.1 gamma/ L Solenoid Diaphragm Metering Pumps 17
1.3.2 Identcode Ordering System 19
1.3.3 Spare Parts Kits, Replacement Diaphragms 20

1.4 delta® Solenoid-Driven Diaphragm Metering Pumps 23
1.4.1 delta® Diaphragm Metering Pumps with Controlled Solenoid Drive 23
1.4.2 Identcode Ordering System 25
1.4.3 Spare Parts Kits, Replacement Diaphragms 26

1.5 mikro delta® Precision Piston Metering Pumps 27
1.5.1 mikro delta® Precision Piston Metering Pumps 27
1.5.2 Identcode Ordering System 29
1.5.3 Spare Parts 30
1.5.4 mikro delta® Accessories 31

1.6 Pneumados b Metering Pumps 32
1.6.1 Pneumados b Metering Pumps 32
1.6.2 Identcode Ordering System 34
1.6.3 Sample Order For Ancillary Equipment 35
1.6.4 Spare Parts Kits 36

1.7 DULCO®flex Peristaltic Pumps 37
1.7.1 DULCO®flex DF2a 37
1.7.2 Identcode Ordering System 38
1.7.3 DULCO®flex DF3a 39
1.7.4 Identcode Ordering System 40
1.7.5 DULCO®flex DF4a 41
1.7.6 Identcode Ordering System 42

1.8 Mechanical-Hydraulic Accessories 43
1.8.1 Foot Valves 43
1.8.2 Injection Valves 46
1.8.3 Injection Lances, Non-Return Valves 51
1.8.4 Back Pressure Valves/Relief Valves 52
1.8.5 Fittings 55
1.8.6 Hoses, Pipes 56
1.8.7 Pressure Accumulator 58
1.8.8 Pulsation Dampeners (In-line) 60
1.8.9 Suction Lances, Suction Kit without Level Switch 61
1.8.10 Suction Lances, Suction Assembly With Single Stage Float Switch 64
1.8.11 Suction Lances, Suction Assembly With Two Stage Float Switch 67
1.8.12 Float Switches 71
1.8.13 Flow Meter, Dosing Monitor, Signal Cable 74

1 Solenoid-Driven Metering Pumps

Contents **Page**

1.8.14 Safety Plant 78
1.8.15 Connection Kits 79
1.8.16 Wall Brackets for Metering Pumps 80
1.8.17 Contact Water Meters For Use In Potable Water, And Accessories 82

1.9 Mechanical/Hydraulic Special Accessories 85
1.9.1 Spare Parts Kits 85
1.9.2 Pump Diaphragms 89
1.9.3 Custom Valve Balls/Valve Springs 90
1.9.4 Connector Parts/Fittings 91
1.9.5 Thermal Flow Monitors 95

1.10 Application Examples 96
1.10.1 Volume-proportional Metering Of Chlorine Bleach Solution In Drinking Water 96
1.10.2 Shock Metering Of Biocide In Cooling Water Circuit 97
1.10.3 Detergent Metering In An Industrial Dishwasher 99

1.0 Overview Of Solenoid-Driven Metering Pumps

1.0.1 Product Overview

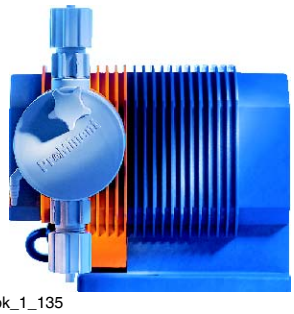

pk_1_135

alpha Motor-Driven Diaphragm Metering Pump

Feed rate range 1.0 - 30.6 l/h, 10 - 2 bar,

This metering pump is designed for simple applications. The pump is ideal for tasks involving continuous metering.

- Control via power ON/OFF
- Stroke length adjustment in steps of 10%



Beta_B_farb

Solenoid Diaphragm Metering Pump Beta® b

Feed rate range 0.74 - 32 l/h, 16 - 2 bar.

This metering pump stands out not only on account of its versatility and reliability but the cost-effectiveness of this all-round pump is also exceptional.

- Manual operation and external contact activation with pulse step-up and step-down
- Continuous stroke length adjustment
- Universal power supply unit 100 - 230 V
- Connection for 2-stage level switch



pk_1_137

gamma/ L Solenoid-Driven Diaphragm Metering Pump

Feed rate range 0.74 – 32 l/h, 16 – 2 bar

This metering pump satisfies the most demanding requirements: Varied adjustment and activation options for standalone applications or use in complex bus-networked systems.

- Manual operation, external contact and analogue activation
- Continuous stroke length adjustment
- Connection for 2-stage level switch
- Optional PROFIBUS® interface and 14-day process timer



pk_1_138

delta® Solenoid-Driven Diaphragm Metering Pump

Feed rate range 7.5 – 75 l/h, 16 – 2 bar

delta® Series with optoDrive® technology for highly effective adaptation to the metering task and monitoring of hydraulic periphery.

- Optional continuous or pulsating metering
- Integrated hydraulic monitoring functions
- Manual operation, external contact and analogue activation
- Continuous stroke length adjustment
- Connection for 2-stage level switch
- Large backlit graphic display
- Optional interfaces for PROFIBUS® or CAN-bus
- Optional 14-day process timer for time and event-dependent metering tasks

- Control module with inputs for pH, redox and chlorine
- EHEDG-certified stainless steel liquid ends

1.0 Overview Of Solenoid-Driven Metering Pumps

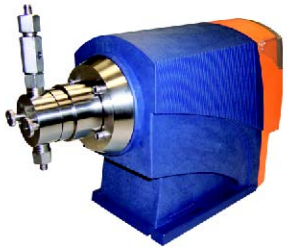

P_DE_0004_C

mikro delta®

- Feed rate range 150 - 1,500 ml/h, 60 - 20 bar
- Stroke volume 1 - 250 µl
- Material versions PTFE and stainless steel
- Metering reproducibility: ± 0,5 %
- Continuous or pulsing operation
- Adaptation of the pump to the feed chemical
- Continuous stroke length adjustment from 0 - 100 %
- Adjustment and display of the feed rate, either as strokes/min or l/h via the keyboard
- Large illuminated graphic display
- External activation via potential-free contacts with pulse step-up and step-down
- External activation by standard signal 0/4-20 mA (optional)
- Interface for PROFIBUS® or CANopen (optional)
- 1 month process timer for time- and event-dependent metering tasks (optional)
- Connection for 2-stage level switch
- 3 LED display for operation, warning and error messages in plain text
- Concentration input for volume-proportional metering

Further technical details on request



P_PN_0007_C

Pneumados b

Capacity range 0.76 - 16.7 l/h, 16 - 2 bar.

Pneumados is a pneumatically-operated metering pump in the capacity range of max. 0.76 - 16.7 l/h at a maximum backpressure of 16 - 2 bar.

The metering stroke is effected by a pneumatically actuated diaphragm, the suction stroke by spring force. The metering capacity can be varied via the stroke length and the stroke frequency.

- Continuous stroke length adjustment
- Material version PVDF and stainless steel
- Stroke frequency up to 180 strokes/min

DULCO®flex Peristaltic Pumps

DF2a



pk_1_143

Feed rate range: 0.4 – 2.4 l/h, 1.5 bar

Typical applications include processes requiring lose delivery pressure such as in docent conditioners in private swimming pools. Spring-loaded rollers ensure a consistent rolling pressure while extending the service life of the pump.

- Rotor in cover mounted in ball bearings for longer service life
- Reliable dosing of small quantities, including gas-emitting chemicals
- Virtually silent operation

DF3a



P_DX_0004_C

Feed rate range: 0.4 – 2.4 l/h, 1.5 bar

The DF3a was specifically developed for the purpose of dosing fragrances. It is equipped with relay outputs for two further metering pumps and three solenoid valves for the diluting water. Spring-loaded rollers ensure a consistent rolling pressure while extending the service life of the pump.

- Viton® hose material, used specifically for dosing fragrances in wellness application
- Program control for the pump and two further peristaltic pumps
- Virtually silent operation

1.0 Overview Of Solenoid-Driven Metering Pumps



P_DX_0005_C

DF4a

Feed rate range 1.5 - 12 l/h, 4 - 2 bar

Stepper motor-actuated peristaltic pump for metering chemicals. It is available in three versions which are geared to the respective application:

- metering of flocculants
- metering of active carbon
- metering of chemicals in general

1.0.2 Selection Guide

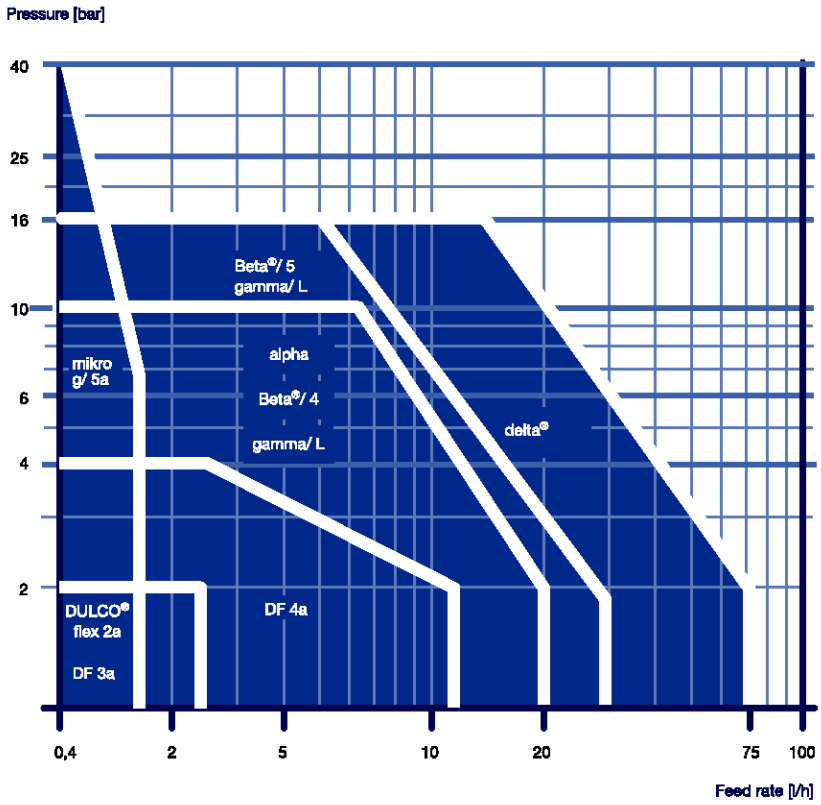

SG_0001_C

Back pressure [bar] as a function of feed rate [l/h]

ProMinent offers a wide range of solenoid-driven metering pumps in the feed rate range from 0.74 to 75 l/h at a backpressure of 16 – 2 bar. ProMinent solenoid-driven diaphragm pumps perform their metering task reliably even under the toughest operating conditions. Maintenance and repair costs are therefore kept low. With a wide range of different materials, these metering pumps are suitable for practically all liquid chemicals.

Functional Principle/Features

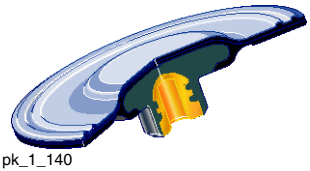

pk_1_140

A solenoid is switched on and off to move the magnetic spindle forward and backward. This stroke motion is transmitted to the metering diaphragm in the liquid end. Two non-return valves prevent the metered medium flowing back during pump operation. The metering capacity of a solenoid-driven diaphragm-type metering pump can be adjusted by way of the stroke length and the stroke rate.

- Virtually wear-free drive as there is only one moving part. Pump operates without lubricated bearings or axles

1.0 Overview Of Solenoid-Driven Metering Pumps

- Outstanding continuous operation properties

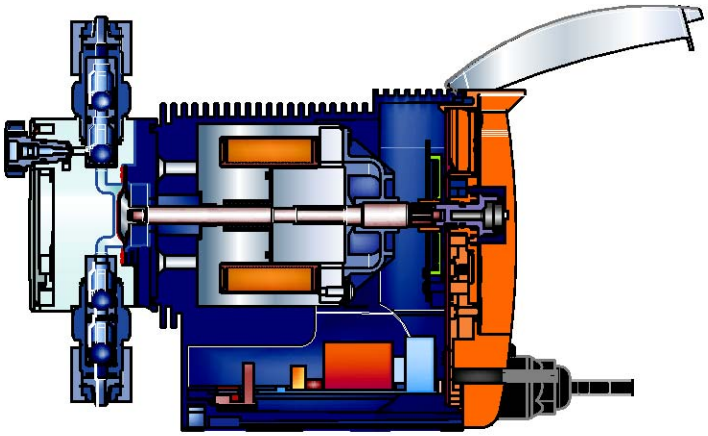

pk_1_139

1.0 Overview Of Solenoid-Driven Metering Pumps

1.0.3 Installation Option

ProMinent® Dosing Station

Comprehensive Accessory Range Ensures Processing Safety

Note: Excessive pressure can built up if solenoid metering pumps are used where a discharge line is blocked, or a line is closed off via a stop valve. In these conditions, therefore, we strongly advise the use of a multifunction valve (13).
When metering at atmospheric pressure the pump can achieve several times the stated feed rate. For this reason we recommend installing a multi-function valve (13).

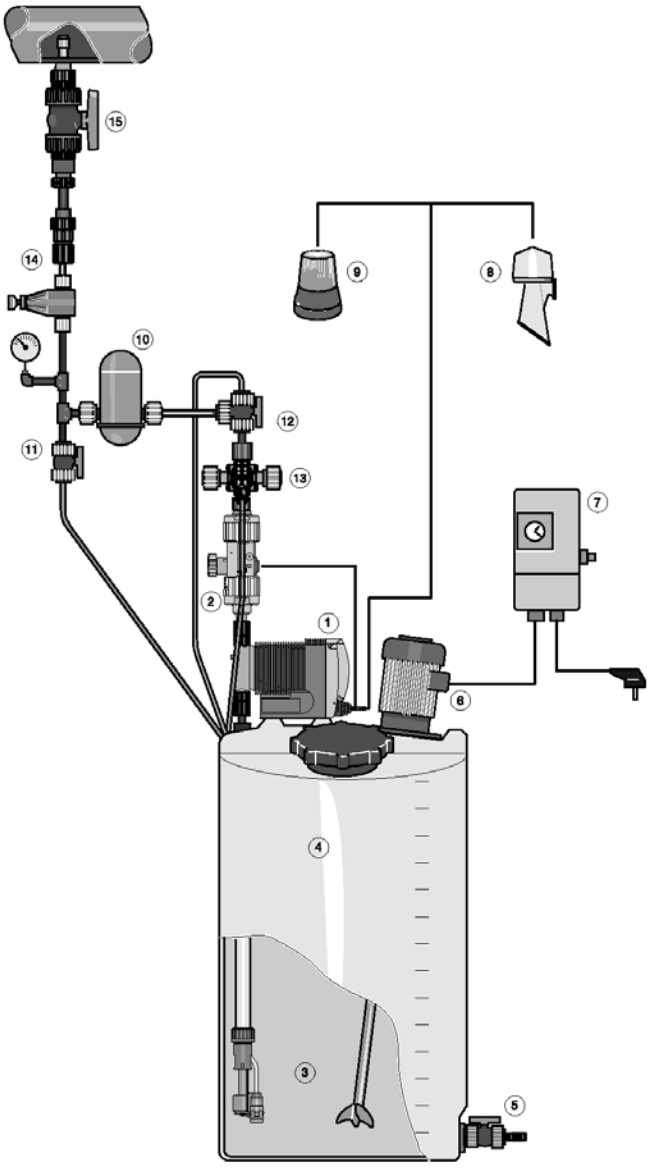

1 gamma/ L metering pump with alarm relay
2 Flow control monitor
3 Suction assembly with float switch
4 ProMinent® chemical tank
5 Drainage tap
6 Electric stirrer
7 ProMinent® timer
8 Warning siren
9 Warning light
10 Accumulator, pulsation dampener
11 Vent valve for accumulator
12 Aeration valve for accumulator
13 Multi-function valve
14 Back pressure valve if pulsation dampener installed
15 Injection lance or injection valve

pk_1_001_1

1.0 Overview Of Solenoid-Driven Metering Pumps

1.1 alpha Motor Driven Diaphragm Metering Pumps

1.1.1 alpha Motor Driven Diaphragm Metering Pumps

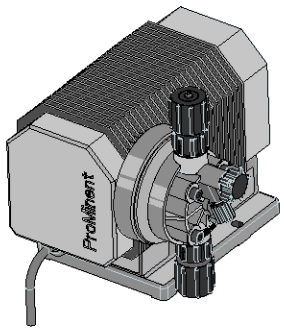

P_ALP_0004_SW

- Feed rate range 1.0 - 30.6 l/h, 10 - 2 bar
- Stroke length adjustment in steps of 10% from 0 - 100 %
- Material versions PVDF and Acrylic/PVC
- Patented coarse / fine bleed valve
- Constant stroke rate
- Control via mains supply ON/OFF

The alpha is a metering pump designed for simple operations.

It is an oscillating motor diaphragm metering pump for liquid chemicals and consists of drive and delivery unit as main components. The drives are available in 2 gear ratios, delivery units in 4 sizes and in the materials acrylic/PVC. It is therefore possible to specify the required feed rate and the material combination. The alpha pumps are switched on/off via the mains power supply, the metering feed rate can be changed via the stroke length adjustment between 100 % and 0.

The drive consists of a powerful split pole motor with gearbox, eccentric shaft and connecting rod as driving rod. The housing is made of glass fibre reinforced plastic and is resistant to shock and chemicals. The eccentric for the stroke movement is guided in an eccentric cam. Suction and pressure stroke are positively driven.

The stroke length adjustment is carried out by varying the eccentricity in 10 % steps via a notched slide when the pump is not working. This means that the diaphragm deflection is always made from the neutral centre position.

During operation, the alpha pump with its positively driven suction and metering strokes as well as the stroke length adjustment by varying the eccentricity produces a smooth, sinusoidal stroke action for suction and metering stroke with diaphragm deflection from the centre position.

The result is good suction performance, smooth metering stroke and consistently accurate metering with low mechanical load on the metering diaphragm.

The delivery unit consists of liquid end, metering diaphragm and head disc. The liquid end in the material combinations PVDF or plexiglass/PVC is equipped with double ball valves on the suction and pressure side as well as coarse/fine bleeding. The bleed valve facilitates suctioning and bleeding at full operating pressure without having to interrupt and de-pressurise the metering line. For media of higher viscosity, the valves can be spring-loaded.

1.1 alpha Motor Driven Diaphragm Metering Pumps

Technical Data

Pump type	Delivery rate at max. backpressure			Delivery rate at medium backpressure			Number of strokes	Stroke length	Connection size o Ø x i Ø	Suction height	Shipping weight
	bar	l/h	cm³/ stroke	bar	l/h	ml/ stroke	Strokes/ min	mm	mm	mWC	kg
50 Hz version											
ALPc 1001	10	1.0	0.29	5	1.1	0.32	58	2	6 x 4	5.1	3.0
ALPc 1002	10	1.8	0.52	5	2.1	0.60	58	2	6 x 4	5.1	3.0
ALPc 1004	10	3.5	1.01	5	3.9	1.12	58	3	8 x 5	5.1	3.0
ALPc 1008	10	7.7	1.00	5	8.6	1.12	128	3	8 x 5	5.1	3.0
ALPc 0707	7	6.9	1.98	3	7.7	2.21	58	3	8 x 5	4.1	3.0
ALPc 0417	4	17.0	2.51	2	18.3	2.76	128	3	8 x 5	4.1	3.0
ALPc 0230	2	30.6	3.98	1	32.7	4.26	128	3	12 x 9	3.1	3.0
60 Hz version											
ALPc 1001	10	1.2	0.29	5	1.3	0.31	69	2	6 x 4	5.1	3.0
ALPc 1002	10	2.2	0.53	5	2.6	0.63	69	2	6 x 4	5.1	3.0
ALPc 1003	10	4.1	0.99	5	4.7	1.14	69	3	8 x 5	5.1	3.0
ALPc 1008	10	8.9	0.96	5	10.4	1.13	154	3	8 x 5	5.1	3.0
ALPc 0707	7	8.3	2.00	3	9.2	2.22	69	3	8 x 5	4.1	3.0
ALPc 0417	4	20.6	2.45	2	21.9	2.75	154	3	8 x 5	4.1	3.0
ALPc 0230	2	34.4	3.72	1	39.2	4.24	154	3	12 x 9	3.1	3.0

All data refers to water at 20 °C.

Materials in contact with medium

	Liquid end	Suction/discharge connector	Seals	Balls
PPE	Polypropylene	Polypropylene	EPDM	Ceramic
PPB	Polypropylene	Polypropylene	FPM	Ceramic
NPE	Acrylic glass	PVC	EPDM	Ceramic
NPB	Acrylic glass	PVC	FPM	Ceramic
PVT	PVDF	PVDF	PTFE	Ceramic

Metering diaphragm with PTFE coating for all types.

FPM = fluororubber

The system includes: Metering pump with mains cable (2 m) and connector, connecting kit for hose/pipe connection as per table.

Motor Data

Type:	Split pole motor with integrated thermal overload protection
Power supply:	220-240 V, 50/60 Hz (version A)
Power input:	50 W (at 230 V/50 Hz)
Power consumption:	0.4 A (at 230 V/50 Hz)

Guarantee: The warranties given under “General Commercial Terms and Conditions” apply. The alpha pump drive is, however, supplied with a 12 month warranty.

1.1 alpha Motor Driven Diaphragm Metering Pumps

1.1.2 Identcode Ordering System

Series alpha, version c

ALPc	Type	Capacity (50 Hz / 60 Hz)				60 Hz								
		l/h	bar			l/h	bar							
	1001	1.0	10			1.2	10							
	1002	1.8	10			2.2	10							
	1004	3.5	10			4.1	10							
	1008	7.7	10			8.9	10							
	0707	6.9	7			8.3	7							
	0417	17.0	4			20.6	4							
	0230	30.6	2			34.4	2							
		Liquid end material												
		PPE	Polypropylene/polypropylene/EPDM											
		PPB	Polypropylene/polypropylene/FPM											
		NPE	Acrylic/PVC/EPDM											
		NPB	Acrylic/PVC/FPM											
		PVT	PVDF/PVDF/PTFE											
			Valve springs											
			2	without valve spring, with bleeding										
			3	with 2 valve springs approx. 0.1 bar, material 1.4571, with bleeding										
				Hydraulic connectors										
				0	Standard according to technical data									
					Version									
					0	With ProMinent® logo								
						Electrical connection								
						A	230 V, 50/60 Hz, 2 m, Euro. plug							
						B	230 V, 50/60 Hz, 2 m, Swiss plug							
						C	230 V, 50/60 Hz, 2 m, Austral. plug							
						D	115 V, 50/60 Hz, 2 m, USA plug							
							Accessories							
							0	No ancillary equipment						
							1	with foot and metering valve, 2 m PVC suction line, 5 m PE metering line						

FPM = Fluorine Rubber

1.1 alpha Motor Driven Diaphragm Metering Pumps

1.1.3 Spare Parts Kits, Replacement Diaphragms

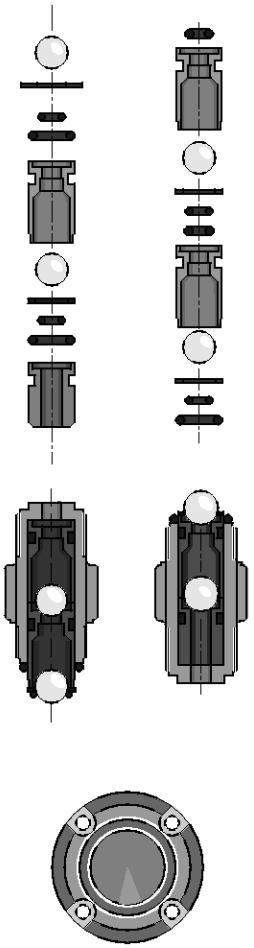

pk_1_008

Spare parts kits for alpha, consisting of

1 pump diaphragm
1 suction valve compl.
1 discharge valve compl.
2 valve balls
1 seal set
1 connector set

Spare parts kits alpha

Type		Order no.
for alpha c, type 1001	PPE	1001646
	PPB	1001654
	NPE	1001715
	NPB	1001723
	PVT	1023109
for alpha c, type 1002, 1004, 1008	PPE	1001647
	PPB	1001655
	NPE	1001716
	NPB	1001724
	PVT	1023110
for alpha c, type 0707, 0417	PPE	1001649
	PPB	1001657
	NPE	1001718
	NPB	1001726
	PVT	1023112
for alpha c, type 0230	PPE	1001650
	PPB	1001658
	NPE	1001719
	NPB	1001727
	PVT	1023113

Replacement diaphragms

Type	Order no.
for alpha c 1001	1000246
for alpha c 1002, 1004, 1008	1000247
for alpha c 0708, 0419	1000249
for alpha c 0230	1000250

1.2 Beta® b Solenoid Diaphragm Metering Pumps

1.2.1 Beta® b Solenoid Diaphragm Metering Pumps

- Capacity range 0.74-32 l/h, 25-2 bar
- Continuous stroke length adjustment from 0-100 % (recommended 30-100 %)
- Supplied in PP, Acrylic, PVDF, PTFE, stainless steel
- Patented deaeration for PP, Acrylic and PVDF
- Self-deaerating liquid end type in PP and Acrylic
- HV liquid end for highly viscous media
- Power supply 100 - 230 V as standard
- 10-setting stroke frequency adjustment from 10-100 %
- External control via volt-free contacts with impulse for speed increaser and reduction
- Connector for 2-stage level switch
- 3 LED display for operation, warning and fault indication

NEW

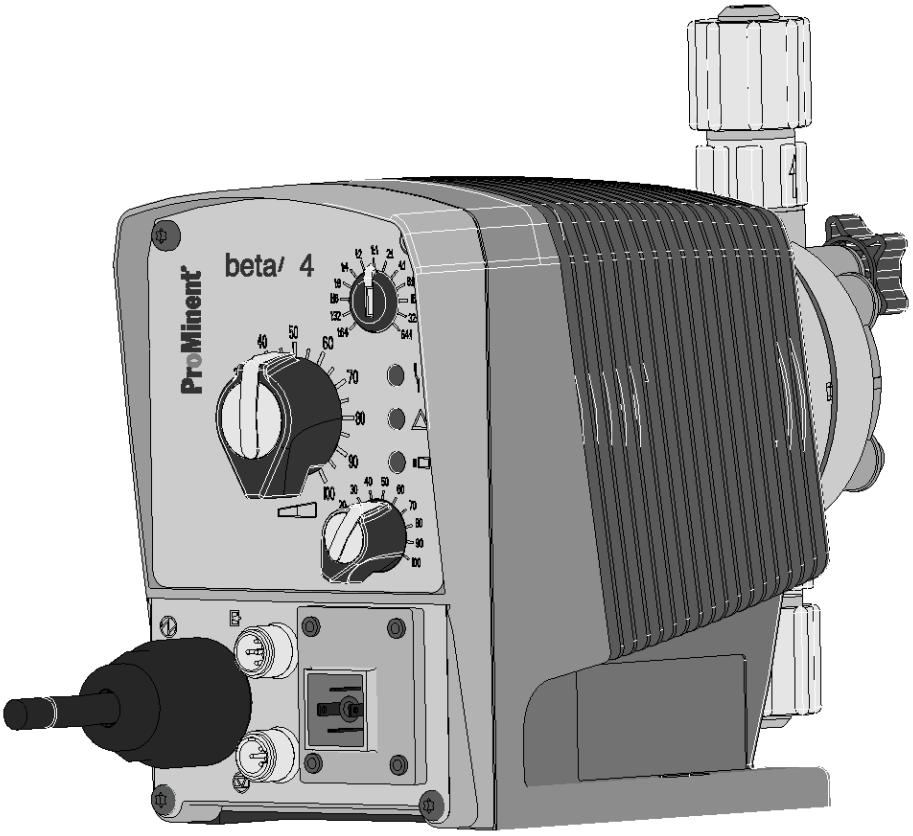

P_BE_0048_SW

Beta® b

1.2 Beta® b Solenoid Diaphragm Metering Pumps

Technical Data

Pump type	Delivery rate at max. backpressure			Delivery rate at medium backpressure			Number of strokes	Connection size o Ø x i Ø	Suction height	Average power consumption	Shipping weight	
											PP, NP, PV, TT	SS
	bar	l/h	cm³/ stroke	bar	l/h	ml/ stroke	Strokes/ min	mm	mWC	W	kg	kg
Beta® b												
BT4b 1000***	10	0.74	0.07	5.0	0.82	0.08	180	6 x 4	6.0**	7,2	2.9	3.6
BT4b 1601***	16	1.10	0.10	8.0	1.40	0.13	180	6 x 4	6.0**	9,6	2.9	3.6
BT4b 1602***	16	2.20	0.20	8.0	2.50	0.24	180	6 x 4	6.0**	11,2	2.9	3.6
BT4b 1604***	16	3.60	0.33	8.0	4.30	0.40	180	6 x 4	6.0**	15,2	3.1	3.9
BT4b 0708***	7	7.10	0.66	3.5	8.40	0.78	180	8 x 5	6.0**	15,2	3.1	3.9
BT4b 0413	4	12.30	1.14	2.0	14.20	1.31	180	8 x 5	3.0**	15,2	3.1	3.9
BT4b 0220	2	19.00	1.76	1.0	20.90	1.94	180	12 x 9	2.0**	15,2	3.3	4.4
BT5b 2504	25	2.90	0.27	10.0	5.00	0.46	180	8 x 4****	6.0**	19,2	4.5	5.3
BT5b 1008	10	6.80	0.63	5.0	8.30	0.76	180	8 x 5	6.0**	19,2	4.5	5.3
BT5b 0713	7	11.00	1.02	3.5	13.10	1.21	180	8 x 5	4.0**	19,2	4.5	5.3
BT5b 0420	4	17.10	1.58	2.0	19.10	1.77	180	12 x 9	3.0**	19,2	4.7	5.8
BT5b 0232	2	32.00	2.96	1.0	36.20	3.35	180	12 x 9	2.0**	19,2	5.1	6.6
Beta® b metering pumps with self-degassing liquid end												
BT4b 1601	16	0.59	0.06	8.0	0.78	0.07	180	6 x 4	1.8**	9,6	2.9	–
BT4b 1602	16	1.40	0.13	8.0	1.70	0.16	180	6 x 4	2.1**	11,2	2.9	–
BT4b 1604	16	2.90	0.27	5.0	4.00	0.37	180	6 x 4	2.7**	15,2	3.1	–
BT4b 0708	7	6.60	0.61	3.5	7.50	0.69	180	8 x 5	2.0**	15,2	3.1	–
BT4b 0413	4	10.80	1.00	2.0	12.60	1.17	180	8 x 5	2.0**	15,2	3.1	–
BT4b 0220	2	16.20	1.50	1.0	18.00	1.67	180	12 x 9	2.0**	15,2	3.3	–
BT5b 1008	10	6.30	0.58	5.0	7.50	0.69	180	8 x 5	3.0**	19,2	4.5	–
BT5b 0713	7	10.50	0.97	3.5	12.30	1.14	180	8 x 5	2.5**	19,2	4.5	–
BT5b 0420	4	15.60	1.44	2.0	17.40	1.61	180	12 x 9	2.5**	19,2	4.7	–

Beta® b pumps with liquid ends for highly viscous media have 10-20 % less metering capacity and are not self-priming. G 3/4-DN connector with d16-DN10 nozzle union.

* The values given in the capacity data tables are guaranteed minimum values, using medium hardness water at room temperature. Bypass connection on self-venting liquid end 6x4 mm.

** Suction lift readings when liquid end and suction tubing are full, or for self-degassing liquid end when the suction tubing contains air.

*** Reduced pressure 4, 7 and 10 bar pump types are available for specialised applications, e.g. for use in swimming pool systems. Further information on request.

**** 6 mm inner diameter in stainless steel version.

All data refers to water at 20 °C.

Materials in contact with medium

	liquid end	suction/pressure connector	seals	balls
PPE	Polypropylene	Polypropylene	EPDM	ceramic
PPB	Polypropylene	Polypropylene	FPM	ceramic
PPT	Polypropylene	PVDF	PTFE	ceramic
NPE	Acrylic	PVC	EPDM	ceramic
NPB	Acrylic	PVC	FPM	ceramic
NPT	Acrylic	PVDF	PTFE	ceramic
PVT	PVDF	PVDF	PTFE	ceramic
TTT	PTFE with carbon	PTFE with carbon	PTFE	ceramic
SST	stainless steel no 1.4404	stainless steel no 1.4404	PTFE	ceramic

Only the self-degassing version available in PPE, PPB, NPE and NPB. Supplied with Hastelloy valve springs, PVDF valve core. Dosing diaphram with PTFE-coating.

FPM = Fluorine Rubber

Reproducible dosing accuracy ±2 % under correct conditions (see operating instructions).
Ambient temperature -10 °C to +45 °C.

Type of enclosure: IP 65, insulation class F

Metering pumps supplied with mains power cable (2 m) and plug, hose/pipe connector set as tables.

1.2 Beta® b Solenoid Diaphragm Metering Pumps

1.2.2 Identcode Ordering System

Beta® Version b

BT4b	Type	Capacity														
		bar	l/h													
	1000	10	0.74													
	1601	16	1.10													
	1602	16	2.20													
	1604	16	3.60													
	0708	7	7.10													
	0413	4	12.30													
	0220	2	19.00													
BT5b																
	2504	25	2.90													
	1008	10	6.80													
	0713	7	11.00													
	0420	4	17.10													
	0232	2	32.00													
		Liquid end/valves material														
		PP	Polypropylene/PVDF, for version self-degassing Polypropylene/Polypropylene													
		NP	Acrylic glass/PVDF, for version self-degassing Acrylic glass/PVC													
		PV	PVDF/PVDF													
		TT	PTFE/PTFE													
		SS	Stainless steel 1.4404/1.4404													
			Seals/diaphragm material													
			E	EPDM/PTFE coated, only for PP and NP self-degassing												
			B	FPM-B/PTFE coated, only on PP and NP self-degassing												
			T	PTFE/PTFE coated												
			S	Diaphragm additionally with FPM coating for siliceous media												
				Liquid end version												
				0	Non-bleed version, no valve spring, for TT, SS and type 0232 only											
				1	Non-bleed version, with valve spring, for TT, SS and type 0232 only											
				2	With deaerator, no valve spring, PP, PV, NP only, not type 0232											
				3	With deaerator, with valve spring, PP, PV, NP only, not type 0232											
				4	version for highly viscous media, only PVT, types 1604, 0708, 1008, 0413, 0713, 0220, 0420											
				9	self-degassing for PP, NP only, not for types 1000 and 0232											
					Hydraulic connections											
					0	Standard according to technical data										
					5	Connector for 12/6 hose, delivery side only										
					9	Connector for 10/4 hose, delivery side only										
						Version										
						0	Standard									
							Logo									
							0	with ProMinent® logo								
								Power supply								
								U	100-230 V ± 10 %, 50/60 Hz							
								M	12 V DC (only BT4b)							
								N	24 V DC							
									Cable and plug							
									A	2 m European						
									B	2 m Swiss						
									C	2 m Australian						
									D	2 m USA						
									1	2 m, open-ended						
										Relay						
										0	No relay					
										1	Fault indicating relay, normally energised, 1 x changeover contact 230 V - 2 A					
										3	Fault indicating relay, normally de-energised, 1 x changeover contact 230 V - 2 A					
										4	as 1 + pacing relay 2 x normally open contacts 24 V - 100 m					
										5	as 3 + pacing relay 2 x normally open contacts 24 V - 100 mA					
											Accessories					
											0	No accessories				
											1	With foot and dosing valve, 2 m PVC suction tubing, 5 m PE discharge tubing				
												Control type				
												0	No lock			
												1	With lock: manual operation locked when external cable plugged in			
													Control Variants			
													0	Standard		
														Options on request		
														0 0	No options	

1.2 Beta® b Solenoid Diaphragm Metering Pumps

1.2.3 Spare Parts Kits, Replacement Diaphragms

Spare parts kits for Beta® consisting of:

1 pump diaphragm
1 suction valve compl.
1 discharge valve compl.
2 valve balls
1 set seals
1 connector set

Suction and pressure valve set not included with stainless steel version.

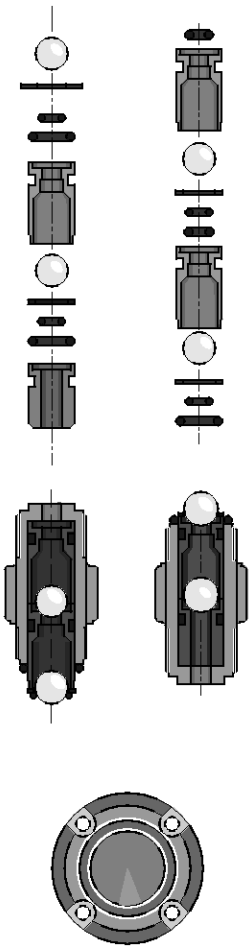

pk_1_008

Spare parts kits Beta®

Type	Materials in contact with medium	Order no.
Type 1000	PPT, NPT, PVT	1023107
	TTT	1001737
	SST	1001729
Type 1601	PPT, NPT, PVT	1023108
	TTT	1001738
	SST	1001730
Type 1602	PPT, NPT, PVT	1023109
	TTT	1001739
	SST	1001731
Type 1604 and Type 2504	PPT, NPT, PVT	1035332
	PVT HV	1035342
	TTT	1035330
	SST	1035331
Type 0708 and Type 1008	PPT, NPT, PVT	1023111
	PVT HV	1019067
	TTT	1001741
	SST	1001733
Type 0413 and Type 0713	PPT, NPT, PVT	1023112
	PVT HV	1019069
	TTT	1001742
	SST	1001734
Type 0220 and Type 0420	PPT, NPT, PVT	1023113
	PVT HV	1019070
	TTT	1001754
	SST	1001735
Type 0232	PPT, NPT, PVT	1023124
	TTT	1001755
	SST	1001736

1.2 Beta® b Solenoid Diaphragm Metering Pumps

Spare parts kits Beta® with self-degassing dosing head

Spare parts kits for Beta® with self-degassing head, consisting of:

1 pump diaphragm
1 suction valve compl.
1 discharge valve compl.
1 pressure control valve compl.
2 valve balls
1 set seals
1 connector set

Type	Materials in contact with medium	Order no.
Type 1601	PPE	1001756
	PPB	1001762
	NPE	1001660
	NPB	1001666
Type 1602	PPE	1001757
	PPB	1001763
	NPE	1001661
	NPB	1001667
Type 1604	PPE	1035335
	PPB	1035336
	NPE	1035333
	NPB	1035334
Type 0708 and Type 1008	PPE	1001759
	PPB	1001765
	NPE	1001663
	NPB	1001669
Type 0413 and Type 0713	PPE	1001760
	PPB	1001766
	NPE	1001664
	NPB	1001670
Type 0220 and Type 0420	PPE	1001761
	PPB	1001767
	NPE	1001665
	NPB	1001671

Replacement diaphragms for Beta® range

Type	Materials in contact with medium	Order no.
Type 1000	all materials	1000244
Type 1601	all materials	1000245
Type 1602	all materials	1000246
Type 1604 and Type 2504	all materials	1034612
Type 0708 and Type 1008	all materials	1000248
Type 0413 and Type 0713	all materials	1000249
Type 0220 and Type 0420	all materials	1000250
Type 0232	all materials	1000251

1.2 Beta® b Solenoid Diaphragm Metering Pumps

1.3 gamma/ L Solenoid Diaphragm Metering Pumps

1.3.1 gamma/ L Solenoid Diaphragm Metering Pumps

- Capacity range 0.74-32 l/h, 16-2 bar
- Continuous stroke length adjustment from 0-100 % (recommended 30-100%)
- Material options: PP, PVDF, Acrylic/PVC, PVDF, PTFE, stainless steel
- Patented bleeding on PP, PVDF and Acrylic/PVC versions
- Self-bleeding liquid end version in PP and Acrylic/PVC
- HV liquid end for highly viscous media
- Digitally accurate stroking rate via keypad and large LCD display
- Select feed rate display in strokes/min. or l/h
- Programmable pressure levels
- Dosing monitor input, adjustable error stroke counter
- External control via voltage free contact with optional increase/decrease pulse function
- Optional external control via standard signal 0/4-20 mA
- Interface for PROFIBUS® DP
- Connector for 2-stage level switch
- Optional 14-day process timer
- 12-24 V DC, 24 V AC low voltage version
- 3 LED display for operation, warning and fault indication
- Concentration entry option for proportional flow dosing
- Option 4-20 mA output corresponds to the product of stroke length and stroke frequency
- Power relay, especially in combination with the process timer for switching higher powers (230 V-8 A)
- Audible alarm for early warning/fault corresponding to intermittent tone/continuous tone



pk_1_005

1.3 gamma/ L Solenoid Diaphragm Metering Pumps

Technical Data

Pump type	Delivery rate at max. backpressure			Delivery rate at medium backpressure			Number of strokes	Connection size o Ø x i Ø	Suction height	Shipping weight	
										PP, NP, PV, TT	SS
	bar	l/h	cm³/ stroke	bar	l/h	ml/stroke	Strokes/ min	mm	mWC	kg	kg
gamma/ L											
GALa 1000	10	0.74	0.07	5.0	0.82	0.08	180	6 x 4	6.0**	2.9	3.6
GALa 1601	16	1.10	0.10	8.0	1.40	0.13	180	6 x 4	6.0**	2.9	3.6
GALa 1602	16	2.10	0.19	8.0	2.50	0.24	180	6 x 4	6.0**	2.9	3.6
GALa 1005	10	4.40	0.41	5.0	5.00	0.46	180	8 x 5***	6.0**	3.1	3.9
GALa 0708	7	7.10	0.66	3.5	8.40	0.78	180	8 x 5	6.0**	3.1	3.9
GALa 0413	4	12.30	1.14	2.0	14.20	1.31	180	8 x 5	3.0**	3.1	3.9
GALa 0220	2	19.00	1.76	1.0	20.90	1.93	180	12 x 9	2.0**	3.3	4.4
GALa 1605	16	4.10	0.38	8.0	4.90	0.45	180	8 x 5***	6.0**	4.5	5.3
GALa 1008	10	6.80	0.63	5.0	8.30	0.76	180	8 x 5	6.0**	4.5	5.3
GALa 0713	7	11.00	1.02	3.5	13.10	1.21	180	8 x 5	4.0**	4.5	5.3
GALa 0420	4	17.10	1.58	2.0	19.10	1.77	180	12 x 9	3.0**	4.7	5.8
GALa 0232	2	32.00	2.96	1.0	36.20	3.35	180	12 x 9	2.0**	5.1	6.6
gamma/ L metering pumps with self-degassing liquid end*											
GALa 1601	16	0.59	0.06	8.0	0.78	0.07	180	6 x 4	1.8**	2.9	–
GALa 1602	16	1.40	0.13	8.0	1.70	0.16	180	6 x 4	2.1**	2.9	–
GALa 1005	10	3.60	0.33	5.0	4.00	0.37	180	8 x 5	2.7**	3.1	–
GALa 0708	7	6.60	0.61	3.5	7.50	0.69	180	8 x 5	2.0**	3.1	–
GALa 0413	4	10.80	1.00	2.0	12.60	1.17	180	8 x 5	2.0**	3.1	–
GALa 0220	2	16.20	1.50	1.0	18.00	1.67	180	12 x 9	2.0**	3.3	–
GALa 1605	16	3.30	0.31	8.0	3.80	0.35	180	8 x 5	3.0**	4.5	–
GALa 1008	10	6.30	0.58	5.0	7.50	0.69	180	8 x 5	3.0**	4.5	–
GALa 0713	7	10.50	0.97	3.5	12.30	1.14	180	8 x 5	2.5**	4.5	–
GALa 0420	4	15.60	1.44	2.0	17.40	1.61	180	12 x 9	2.5**	4.7	–

gamma/ L pumps with liquid ends for highly viscous media have 10-20 % less metering capacity and are not self-priming. G 3/4-DN connector with d16-DN10 nozzle union.

* The values given in the capacity data tables are guaranteed minimum values, using medium hardness water at room temperature. Bypass connection on self-venting liquid end 6x4 mm.

** Suction lift readings when liquid end and suction tubing are full, or for self-degassing liquid end when the suction tubing contains air.

*** 6 mm inner diameter in stainless steel version.

All data refers to water at 20 °C.

Materials in contact with medium

	liquid end	suction/pressure connector	seals	balls
PPE	Polypropylene	Polypropylene	EPDM	ceramic
PPB	Polypropylene	Polypropylene	FPM-B	ceramic
NPE	Acrylic	PVC	EPDM	ceramic
NPB	Acrylic	PVC	FPM-B	ceramic
PVT	PVDF	PVDF	PTFE	ceramic
TTT	PTFE with carbon	PTFE with carbon	PTFE	ceramic
SST	stainless steel no. 1.4404	stainless steel no. 1.4404	PTFE	ceramic

Self-degassing version available in PP and NP only. Supplied with Hastelloy valve springs, PVDF valve core. Dosing diaphram with PTFE-coating.

FPM = Fluorine Rubber

Reproducible dosing accuracy ±2 % under correct conditions (see operating instructions).

Ambient temperature -10 °C to +45 °C

Medium power consumption: Type 1000-0220: 17 W, Type 1605-0232: 22 W

Type of enclosure: IP 65, insulation class F

Metering pumps supplied with mains power cable (2 m) and plug, hose/pipe connector set as tables.

1.3 gamma/ L Solenoid Diaphragm Metering Pumps

1.3.2 Identcode Ordering System

gamma/ L, Version a

GALa	Type	Capacity											
		bar	l/h		bar	l/h		bar	l/h		bar	l/h
	1605	16	4.10	1008	10	6.80	0713	7	11.00	0420	4	17.10
	1602	16	2.10	1005	10	4.40	0708	7	7.10	0413	4	12.30
	1601	16	1.10	1000	10	0.74				0232	2	32.00
										0220	2	19.00

Liquid end/valves material

PP	Polypropylene/Polypropylene	TT	PTFE/PTFE
NP	Acrylic glass/PVC	SS	Stainless steel 1.4404/1.4404
PV	PVDF/PVDF		

Seals/diaphragm material

E	EPDM/PTFE coated, only for PP and NP
B	FPM-B/PTFE coated, only on PP and NP
T	PTFE/PTFE coated, only on PV, TT and SS
S	Diaphragm additionally with FPM coating for siliceous media, FPMB seals on PP and NP, PTFE on TT, PV and SS

Liquid end version

0	Non-bleed version, no valve spring, for NP, TT and SS and type 0232 only
1	Non-bleed version, with valve spring, for NP, TT and SS and type 0232 only
2	Bleed function, no valve springs for PP, PVT, NP, not type 0232
3	Bleed function, with valve springs for PP, PVT, NP, not type 0232
4	version for highly viscous media, only PVDF, types 1005, 1605, 0708, 1008, 0413, 0713, 0220, 0420
9	self-degassing for PP, NP only, not for types 1000 and 0232

Hydraulic connections

0	Standard according to technical data
5	Delivery side connection for hose 12/6, suction side standard
9	Delivery side connection for hose 10/4, suction side standard

Version

0	With ProMinent® logo

Power supply

U	100-230 V, ±10 %, 50/60 Hz
M	12-24 V DC ±10 %,types 1000-0220 only
N	24 V DC ±10 %,types 1605-0232 only
P	24 V AC ± 10 % all types

Cable and plug

A	2 m European	D	2 m USA
B	2 m Swiss	1	2 m, open-ended
C	2 m Australian		

Relay

0	No relay
1	Fault indicating relay, normally energised, 1 x changeover contact 230 V - 2 A
3	Fault indicating relay, normally de-energised, 1 x changeover contact 230 V - 2 A
4	as 1 + pacing relay 2 x normally open contacts 24 V - 100 mA
5	as 3 + pacing relay 2 x normally open contacts 24 V - 100 mA
A	Disconnect and warning relay, normally energised 2 x normally open contacts 24 V - 100 mA
C	as 1 + 4-20 mA output 1 x normally open contact 24 V - 100 mA
G	Power relay, normally de-energised, 1 x changeover contact 230 V - 8 A
H	Acoustic alarm

Accessories

0	No accessories
1	With foot valve and delivery valve, 2 m PVC suction tubing, 5 m PE delivery tube, for PP, PV and NP only
2	As 0 + calibrating cylinder
3	As 1 + calibrating cylinder

Control variant

0	Manual + external 1:1
1	Manual + external with pulse control
2	Manual + external 1:1 + analogue current
3	Manual + external with pulse control + analogue 0/4 - 20 mA
4	as 0 + 14-day process timer
5	as 3 + 14-day process timer
7	as 1 + concentration entry
8	as 3 + concentration entry
R	as 3 + PROFIBUS® DP interface, M12
–	no relay with PROFIBUS® version

Access code

0	No access code
1	With access code

Metering monitor

0	Pulse signal input

Pause/level

0	Pause N/C, level N/C

1.3 gamma/ L Solenoid Diaphragm Metering Pumps

1.3.3 Spare Parts Kits, Replacement Diaphragms

Replacement parts kit for gamma/ L, consisting of:

1 Metering diaphragm
1 Suction valve compl.
1 Pressure valve compl.
2 Valve balls
1 Kit seals
1 Connecting kit

Suction and pressure valve set not included with stainless steel version.

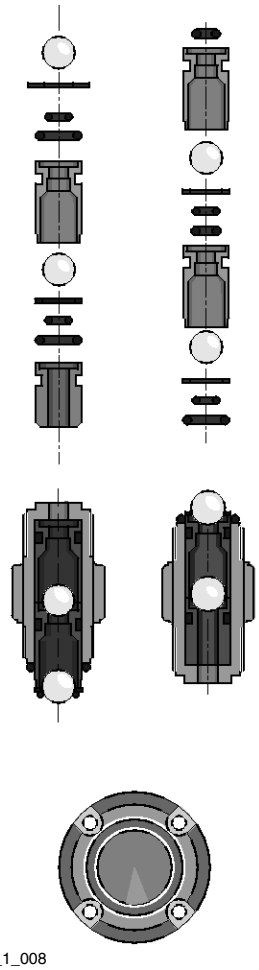

pk_1_008

Spare parts kits gamma/ L and Beta® a

Type		Order no.
Type 1000	PPE	1001644
	PPB	1001652
	NPE	1001713
	NPB	1001721
	PVT	1023107
	TTT	1001737
	SST	1001729
Type 1601	PPE	1001645
	PPB	1001653
	NPE	1001714
	NPB	1001722
	PVT	1023108
	TTT	1001738
	SST	1001730
Type 1602	PPE	1001646
	PPB	1001654
	NPE	1001715
	NPB	1001723
	PVT	1023109
	TTT	1001739
	SST	1001731
Type 1005 and Type 1605	PPE	1001647
	PPB	1001655
	NPE	1001716
	NPB	1001724
	PVT	1023110
	PVT HV	1019066
	TTT	1001740
	SST	1001732
Type 0708 and Type 1008	PPE	1001648
	PPB	1001656
	NPE	1001717
	NPB	1001725
	PVT	1023111
	PVT HV	1019067
	TTT	1001741
	SST	1001733
Type 0413 and Type 0713	PPE	1001649
	PPB	1001657
	NPE	1001718
	NPB	1001726
	PVT	1023112
	PVT HV	1019069
	TTT	1001742
	SST	1001734

1.3 gamma/ L Solenoid Diaphragm Metering Pumps

Type		Order no.
Type 0220 and Type 0420	PPE	1001650
	PPB	1001658
	NPE	1001719
	NPB	1001727
	PVT	1023113
	PVT HV	1019070
	TTT	1001754
	SST	1001735
Type 0232	PPE	1001651
	PPB	1001659
	NPE	1001720
	NPB	1001728
	PVT	1023124
	TTT	1001755
	SST	1001736

Spare parts kits for gamma/ L with self-bleeding liquid end, consisting of:

1 pump diaphragm
1 suction valve set
1 discharge valve set
1 bleed valve set
2 valve balls
1 seal set
1 connector set

Spare parts kits gamma/ L with self-bleeding liquid end

Type	Materials in contact with medium	Order no.
Type 1601	PPE	1001756
	PPB	1001762
	NPE	1001660
	NPB	1001666
Type 1602	PPE	1001757
	PPB	1001763
	NPE	1001661
	NPB	1001667
Type 1005 and Type 1605	PPE	1001758
	PPB	1001764
	NPE	1001662
	NPB	1001668
Type 0708 and Type 1008	PPE	1001759
	PPB	1001765
	NPE	1001663
	NPB	1001669
Type 0413 and Type 0713	PPE	1001760
	PPB	1001766
	NPE	1001664
	NPB	1001670
Type 0220 and Type 0420	PPE	1001761
	PPB	1001767
	NPE	1001665
	NPB	1001671

1.3 gamma/ L Solenoid Diaphragm Metering Pumps

Spare diaphragm for gamma/ L series

Type	Materials in contact with medium	Order no.
Type 1000	all materials	1000244
Type 1601	all materials	1000245
Type 1602	all materials	1000246
Type 1005 and Type 1605	all materials	1000247
Type 0708 and Type 1008	all materials	1000248
Type 0413 and Type 0713	all materials	1000249
Type 0220 and Type 0420	all materials	1000250
Type 0232	all materials	1000251

1.4 delta® Solenoid-Driven Diaphragm Metering Pumps

1.4.1 delta® Diaphragm Metering Pumps with Controlled Solenoid Drive

optoDrive® inside

- Continuous or pulsing operation
- Adaptation of the pump to the feed chemical
- Detection of blocked metering points, broken metering lines and trapped air or gas bubbles in the liquid end by the integral injection point monitor optoGuard®.
- Feed rate range 7.5 - 75 l/h, 25 - 2 bar
- Large adjustment range: continuous 1:1,800, discontinuous 1:36,000
- Stroke length continuously adjustable between 0 - 100 % (recommended 30 - 100 %)
- Material versions PVDF, acrylic glass/PVC and stainless steel
- Patented bleed
- Diaphragm rupture detection and signalling (optional)
- Adjustment and display of the feed rate, either as strokes/min or l/h via the keyboard
- Large illuminated graphic display
- External activation via potential-free contacts with pulse step-up and step-down
- Option of external activation by standard signal 0/4-20 mA
- Interface for PROFIBUS® or CANopen (optional)
- Optional 14-day process timer for time- and event-dependent metering tasks (optional)
- Connection for 2-stage level switch
- 3 LED display for operation, warning and error messages in plain text
- Concentration input for volume-proportional metering
- Automatic bleed
- Pump type 2508 with 7.5 l/h at 25 bar
- Material version NP for pump types 2508, 1612,1020 and 0730
- HV liquid ends for higher-viscosity media

NEW

- Control module with inputs for pH, ORP and chlorine
- EHEDG-certified stainless steel liquid ends

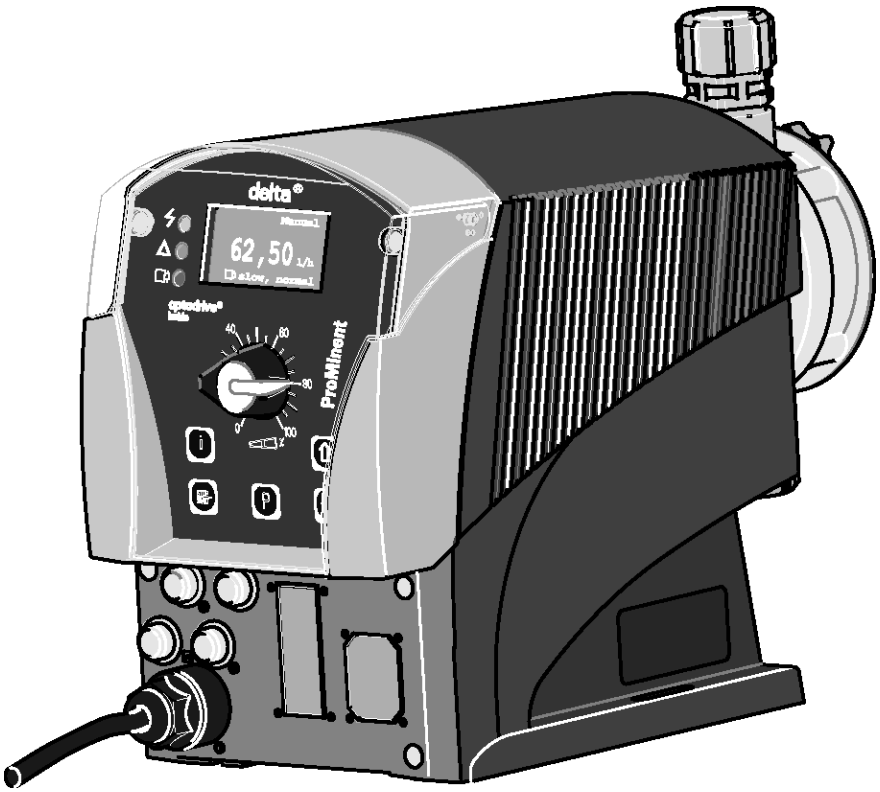

pk_1_131_2

1.4 delta® Solenoid-Driven Diaphragm Metering Pumps

Technical Data

Pump type	Max. pressure bar	Delivery rate l/h	Stroke Volume cm³/stroke	Max. stroke rate Strokes/min	Connection size o Ø x i Ø mm	Suction height mWC	Shipping weight PVT / SST kg
DLTA 2508	25	7.5	0.62	200	8 x 4**	5*	10 / 11
DLTA 1608	16	7.8	0.65	200	8 x 5**	5*	10 / 11
DLTA 1612	16	11.3	0.94	200	8 x 5	6*	10 / 11
DLTA 1020	10	19.1	1.59	200	8 x 5	5*	10 / 11
DLTA 0730	7	29.2	2.43	200	12 x 9	5*	10 / 11
DLTA 0450	4	49.0	4.08	200	G 3/4 - DN 10	3*	10 / 11
DLTA 0280	2	75.0	6.25	200	G 3/4 - DN 10	2*	10 / 11

delta® metering pumps for higher-viscosity media have a 10 - 20 % lower metering capacity and are not self-priming. Connection G 3/4 - DN 10 with tube nozzle d16 - DN 10.

* Suction height (mWC) = suction height with primed liquid end and primed suction line

** For stainless steel version 6 mm connection width

All data refers to water at 20 °C.

Materials in contact with medium

Type	Liquid end	Suction/ pressure connector	Seals	Valve balls
NPE	Plexiglass	PVC	EPDM	Ceramic
NPB	Plexiglass	PVC	FPM	Ceramic
PVT	PVDF	PVDF	PTFE	Ceramic
SST	Stainless steel 1.4404	Stainless steel 1.4404	PTFE	Ceramic

Type of connections

Plastic	8-12 mm	Hose compression fitting
	DN 10	Hose grommet d16 DN 10
Stainless steel	6-12 mm	System Swagelok
	DN 10	Insert Rp 3/8

Metering diaphragm with PTFE coating

Reproducibility of metering ± 2 % when used in accordance with notes in the operating instructions.

Permissible ambient temperature -10° C to 45° C.

Mean power consumption 78 W

IP rating IP 65, insulation class F

Scope of delivery: Metering pump with mains cable (2 m) and connector, connecting kit for hose/ pipe connection according to table.

1.4 delta® Solenoid-Driven Diaphragm Metering Pumps

1.4.2 Identcode Ordering System

delta® series

DLTA	Type	Capacity					
		bar	l/h		bar	l/h	
	2508	25.0	7.50	0730	7.0	29.20	
	1608	16.0	7.80	0450	4.0	49.00	
	1612	16.0	11.30	0280	2.0	75.00	
	1020	10.0	19.10				

Liquid end/valves material

PV	PVDF/PVDF not for pump type 2508
NP	Acrylic glass/PVC only for pump type 2508, 1608, 1612, 1020, 0730
SS	Stainless steel/stainless steel

Seals/diaphragm material

T	Only with PV and SS
S	PTFE/diaphragm additionally with FPM coating for silica-laden media
B	Only with NP
E	Only with NP

Liquid end version

0	Without ventilation, without valve spring
1	Without ventilation, with valve spring
2	With ventilation, without valve spring
3	With ventilation, with valve spring
4	HV version for higher-viscosity media only for types 1608, 1612,1020 and 0730
H	Hygienic pump head with tri-clamp connectors on request

Hydraulic connections

0	Standard connectors as per technical data
5	Discharge-side connector for 12/6 hose, suction-side standard
F	Connector on discharge side for 8/4 hose, standard on suction side

Diaphragm rupture indicator

0	Without diaphragm failure indication
1	With diaphragm failure indication

Version

0	With ProMinent logo

Power supply

U	Universal controller 100-240 V

Cable and plug

A	2 m Europe	D	2 m USA / 115 V
B	2m Switzerland	1	2 m without plug
C	2 m Australia		

Relay

0	Without relay
1	alarm relay normally energised 1 x C/O contact 230 V – 8 A
3	alarm relay normally de-energised 1 x C/O contact 230 V – 8 A
4	as 1 + pacing relay 2 x N.O. contacts 24 V – 100 mA
5	as 3 + pacing relay 2 x N.O. contacts 24 V – 100 mA
A	Shutdown and alarm relay normally energised 2 x N.O. contacts 24 V – 100 mA
C	as 1 + 4-20 mA output 1 x N.O. contact 24 V – 100 mA
F	with automatic bleeder, 230 V not for pump type 2508
G	with automatic bleed valve, 24 V DC and relay output

Accessories

0	Without accessories
1	With foot and metering valve, 2m suction line and 5 m discharge line
2	As 0 + measuring cup (only for type 2508, 1608, 1612, 1020, and 0730)
3	As 1 + measuring cup (only for type 2508, 1608, 1612, 1020, and 0730)

Control variant

0	Manual + external contact with pulse control
3	Manual + external contact with pulse control + analog 0/4-20 mA
4	as 0 + 14-day process timer
5	as 3 + 14-day process timer
C	CANopen
M	with pH, ORP and chlorine control module
R	As 3 + PROFIBUS® interface, M12

Access code

0	Without access code
1	With access code

Language

DE	German
EN	English
FR	French
ES	Spanish

Pause/level

0	Pause N.C. contact level, N.C. contact

1.4 delta® Solenoid-Driven Diaphragm Metering Pumps

1.4.3 Spare Parts Kits, Replacement Diaphragms

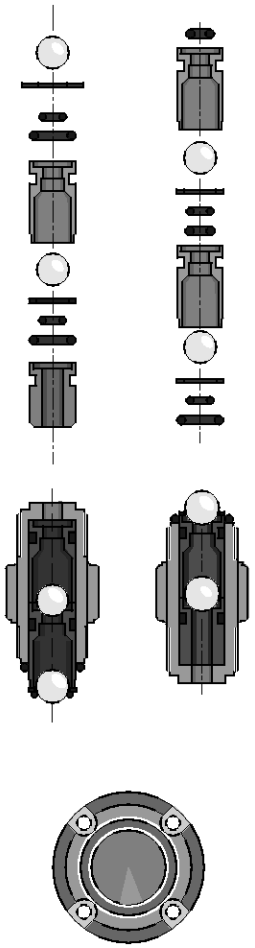

pk_1_008

Replacement parts kit for delta®, consisting of:

1 metering diaphragm
1 suction valve compl.
1 pressure valve compl.
2 valve balls
1 kit seals
1 connecting kit

Stainless steel version without suction and pressure valve compl.

Spare parts kits for delta®

Type	Materials in contact with medium	Order no.
Type 2508	NPE	1033172
	NPB	1033171
	SST	1030226
Type 1608	NPE	1030620
	NPB	1030611
	PVT	1030225
	SST	1030226
Type 1612	NPE	1030536
	NPB	1030525
	PVT	1027081
	SST	1027086
Type 1020	NPE	1030537
	NPB	1030526
	PVT	1027082
	SST	1027087
Type 0730	NPE	1030621
	NPB	1030612
	PVT	1027083
	SST	1027088
Type 0450	PVT	1027084
	SST	1027089
Type 0280	PVT	1027085
	SST	1027090

Replacement diaphragms for delta® series

Type	Materials in contact with medium	Order no.
Type 2508/1608	all materials	1030353
Type 1612	all materials	1000248
Type 1020	all materials	1000249
Type 0730	all materials	1000250
Type 0450	all materials	1000251
Type 0280	all materials	1025075

1.5 mikro delta® Precision Piston Metering Pumps

1.5.1 mikro delta® Precision Piston Metering Pumps

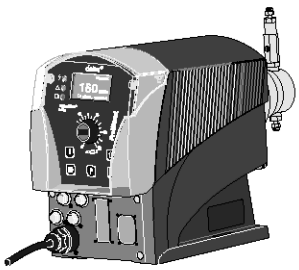

P_DE_0003_SW1

- Feed rate range 150 - 1,500 ml/h, 60 - 20 bar
- Stroke volume 1 - 250 µl
- Material versions PTFE and stainless steel
- Metering reproducibility: ± 0,5 %
- Continuous or pulsing operation
- Adaptation of the pump to the feed chemical
- Continuous stroke length adjustment from 0 - 100 %
- Adjustment and display of the feed rate, either as strokes/min or l/h via the keyboard
- Large illuminated graphic display
- External activation via potential-free contacts with pulse step-up and step-down
- External activation by standard signal 0/4-20 mA (optional)
- Interface for PROFIBUS® or CANopen (optional)
- 1 month process timer for time- and event-dependent metering tasks (optional)
- Connection for 2-stage level switch
- 3 LED display for operation, warning and error messages in plain text
- Concentration input for volume-proportional metering

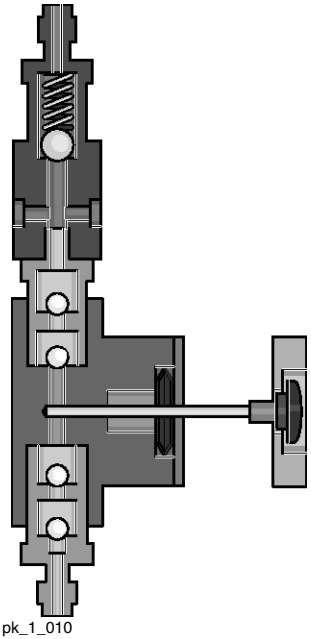

pk_1_010
Liquid end

Further technical details on request

The mikro delta® is a solenoid-driven precision piston metering pump for dosing solutions in millilitre range. The controlled solenoid drive enables continuous dosing of smallest amounts and single stroke dosing up to a volume of 1 µl/stroke.

The maximum stroke length of the modified delta® solenoid drive is 5 mm. The stroke frequency is infinitely adjustable from 1 stroke/h up to 100 strokes/min. A nearly continuous dosing can be realised from approx. 20 strokes/h, this corresponds to a stroke length of 3 minutes.

By means of the piston-type liquid ends of the preceding pump series mikro G/5 the same delivery rates are reached at half stroke length and double stroke frequency, however at higher pressure from 60 to 20 bar for stainless steel liquid ends and 10 bar for PTFE liquid ends.

The mikro delta® is available in three sizes with piston diameters of 2.5, 5 and 8 mm at a maximum stroke volume of 25, 100 and 250 µl. The sealing material is either PTFE pure white or PTFE with carbon. The material PTFE with carbon is recommended when the media to be dosed has no lubricating properties itself and traces of carbon have no disadvantage for the process. Double ball valves made of Ruby/Ceramic and the integrated back pressure valve ensure constant and pressure independent dosing from zero up to a maximum back pressure of 60 bar with a reproducibility better than 0.5 %. The dosing capacity is 1 – 250 µl/stroke and 0.001 – 1,500 ml/h.

Technical Data

Pump type	Delivery rate at max. backpressure			Plunger Ø	Connection size hose oØ x iØ	Connection size piping oØ	Suction height	Intake height	Perm. admiss. pressure suction side	Back presure valve Holding pressure	Shipping weight
	bar	ml/h	µl/stroke	mm	mm	mm	mWC	mWC	bar	bar	kg
Version TT											
100150 TT	10	145	24.17	2.5	1.75 x 1.15	–	6*	0.6**	5	2.5	10
100600 TT	10	580	96.67	5	1.75 x 1.15	–	6*	2.0**	5	2.5	10
101500 TT	10	1,480	246.67	8	3.20 x 2.40	–	4*	2.0**	5	1.5	10
Version SS											
600150 SS	60	145	24.17	2.5	1.75 x 1.15	1.58	6*	0.6**	30	2.5	11
400600 SS	40	580	96.67	5	1.75 x 1.15	1.58	6*	2.0**	20	2.5	11
201500 SS	20	1,480	246.67	8	3.20 x 2.40	3.18	4*	2.0**	10	1.5	11

* Suction height with primed liquid end and primed suction line

** Intake height with clean and wetted valves. Dosing media water at 20 °C. Intake height at 100 % stroke length, open deaeration screw and suction side as described.

max. strokes 100/min.

All data refers to water at 20 °C.

1.5 mikro delta® Precision Piston Metering Pumps

Materials in contact with medium

Version	Dosing head	Suction/Pressure connection	Valve balls	Valve seats	Plunger	Valve sealing	Plunger gaskets
TTT	PTFE with carbon	PTFE with carbon	ruby	ceramic	ceramic	PTFE	PTFE, white
TTG	PTFE with carbon	PTFE with carbon	ruby	ceramic	ceramic	PTFE	PTFE + graphite
SST	stainless steel 1.4571	stainless steel 1.4571	ruby	ceramic	ceramic	PTFE	PTFE, white
SSG	stainless steel 1.4571	stainless steel 1.4571	ruby	ceramic	ceramic	PTFE	PTFE + graphite

Permissible ambient temperature -10 °C ... +45 °C.

Motor Data

Nominal power, approx.	38 W
Nominal current, approx.	0,64 ... 0,42 A
Start-up peak current, decaying within 50 ms	8 ... 4 A
Fuse	1,6 AT

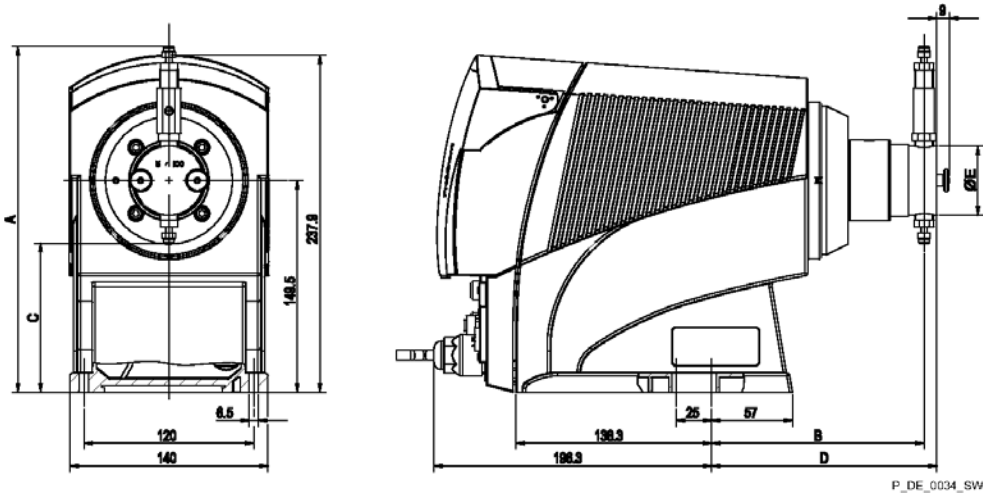

P_DE_0034_SW

Dimensions

Type	A mm	B mm	C mm	D mm	E Ø mm
Version TT					
100150	243.9	150.1	105.1	159.1	49
100600	243.9	150.1	105.1	159.1	49
101500	256.2	150.1	92.3	161.1	49
Version SS					
600150	256.2	150.1	92.3	161.1	49
400600	254.7	150.1	99.0	159.1	49
201500	256.2	150.1	92.3	161.1	49

1.5 mikro delta® Precision Piston Metering Pumps

1.5.2 Identcode Ordering System

mikro delta® series, version a

MDLa	Type	Capacity bar	ml/h		Version dosing head	Sealing material	Liquid end version	Hydraulic connection	Logo	Electrical power supply	Cable and plug	Relay	Accesories	Control variants	Acces code	Language	Pause / Level
	100150	10	145	(only TT)													
	600150	60	145	(only SS)													
	100600	10	580	(only TT)													
	400600	40	580	(only SS)													
	101500	10	1,480	(only TT)													
	201500	20	1,480	(only SS)													
		Version dosing head															
		SS	Stainless steel 1.4571														
		TT	PTFE with 25 % carbon														
			Sealing material														
			T	PTFE pure white													
			G	PTFE with graphite													
				Liquid end version													
				0	no valve spring												
				1	with valve spring												
					Hydraulic connection												
					0	Standard according to technical data											
						Logo											
						0	with ProMinent®-Logo										
						2	no ProMinent®-Logo										
							Electrical power supply										
							U	100-230 V ± 10 %, 50/60 Hz									
								Cable and plug									
								A	2 m European								
								B	2 m Swiss								
								C	2 m Australian								
								D	2 m USA								
									Relay								
									0	no relay							
									1	Fault indicating relay, normally energised, 1x changeover contact, 230 V - 8 A							
									3	Fault indicating relay, normally de-energised, 1 x changeover contact, 230 V - 8 A							
									4	as 1 + pacing relay, 2 x normally open contact, 24 V - 100 mA							
									5	as 3 + pacing relay, 2 x normally closed contact, 24 V - 100 mA							
										Accesories							
										0	no accessories						
											Control variants						
											0	manual + external contact with pulse control					
											3	manual + external contact w. pulse control + analogue 0/4-20 mA					
											4	as 0 + Process Timer (1 month)					
											5	as 3 + Process Timer (1 month)					
											C	CANopen					
											R	as 3 + PROFIBUS®-interface, M12					
												Acces code					
												0	no acces code				
												1	with acces code				
													Language				
													DE	German			
													EN	English			
													FR	French			
													ES	Spanish			
														Pause / Level			
														0	Pause, n.c., level n.c.		

1.5 mikro delta® Precision Piston Metering Pumps

1.5.3 Spare Parts

Spare plunger

Type	Order no.
100150/600150	803149
100600/400600	803181
101500/201500	803182

Spare plunger packing PTFE pure white

Type	Order no.
100150/600150	485431
100600/400600	485430
101500/201500	485432

Spare plunger packing PTFE with graphite

Type	Order no.
100150/600150	485428
100600/400600	485427
101500/201500	485429

1.5 mikro delta® Precision Piston Metering Pumps

1.5.4 mikro delta® Accessories

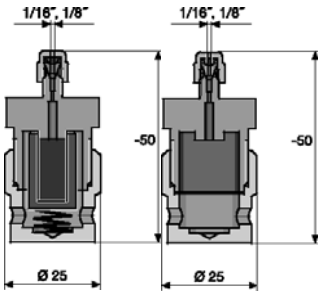

pk_1_015 pk_1_014

Stainless steel suction filter

Without check ball, interchangeable filter element. Material: 1.4404/1.4310/SS 316/PTFE

Connection		Order no.
1/16" - 15 µm	(for mikro 50 and 200 ml head) (Fig. pk_1_015) for tube Ø 1.58	803253
1/8" - 15 µm	(for mikro 500 ml head) (Fig. pk_1_015) for tube Ø 3.175	803254
1/8" - 60 µm	(for SK metering pumps) (Fig. pk_1_014) for tube Ø 3.175	803255

Replacement filter elements for suction filter

		Order no.
Sintered elements	15 µm	403814
Screen mesh	60 µm	404523

Stainless steel injection valve

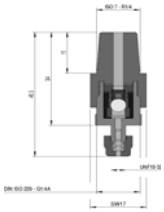
P_AC_0237_SW

Housing in 1.4404 and springs in 1.4571, PTFE seals.

Size	Connection	Order no.
Ø 20 x 48 mm	1/16" - 1/4" for tube Ø 1.58 and 1.75 mm	803251
Ø 22 x 56 mm	1/8" - 1/4" for tube Ø 3.175 and 3.2 mm	803252

Suction and discharge pipe

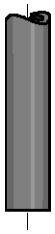
pk_1_013

	Permissible operating pressure bar	Order no.
PTFE 1.75 mm o. Ø x 1.15 mm i. Ø (1/16")	12*	037414
PTFE 3.2 mm o. Ø x 2.4 mm i. Ø (1/8")	8*	037415
Stainless steel pipe 1.4435 1.58 mm o. Ø x 0.9 mm i. Ø (1/16")	400*	1020774
Stainless steel pipe 1.4435 3.175 mm o. Ø x 1.5 mm i. Ø (1/8")	400*	1020775

* permitted operating pressure at 20 °C, provided media is compatible and pipe is correctly connected.

Nipple

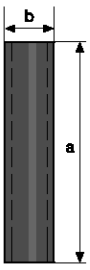

pk_1_017

1.4571 pipe nipple for mikro g/ 5 and gamma/ 4 SK for connecting 1/16" and 1/8" PTFE tubing.

	Order no.
Nipple 1/16" o. Ø 1.58 mm x i. Ø 0.9 mm, length 25 mm	403215
Nipple 1/8" o. Ø 3.175 mm x i. Ø 1.5 mm, length 30 mm	403216
Nipple 1/8-1/16" o. Ø 3.175 - 1.58 mm, length 45 mm	403217

1.6 Pneumados b Metering Pumps

1.6.1 Pneumados b Metering Pumps

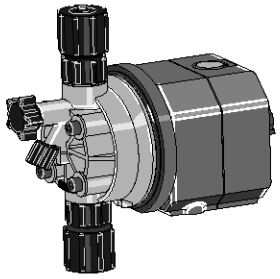

P_PN_0005_SW

- Feed rate range: 0.76 - 16.7 l/h, 16 - 2 bar
- Infinitely variable stroke length adjustment
- Material version PVDF and stainless steel
- Stroke rate up to 180 strokes/min

Pneumados b is a pneumatically operated metering pump in the feed rate range from 0.76 l/h to 16.7 l/h at a max. backpressure of 16 - 2 bar. The pressure stroke takes place by means of compressed air applied against a diaphragm while the intake stroke is controlled by spring force. The metering feed rate can be adjusted by means of the stroke length and stroke rate.

Typical applications of the Pneumados b include:

Animal feed treatment

- Metering and spraying animal feed with flavouring agents

Painting systems

- Metering coagulants

Greenhouses

- Metering fertilisers and minerals

Carwash systems

- Metering detergent, shampoo, brightener, wax, drying agent as well as preparing recycling water by metering flocculant, pH-corrector, antifoaming agent and de-emulsifier

in all systems with central controller (e.g. PLC) and compressed air supply

1.6 Pneumados b Metering Pumps

Technical Data

Pump type		Delivery rate at max. backpressure		Number of strokes	Connector Sizes	Suction height	Shipping weight
	bar	l/h	cm^3/stroke	Strokes/min		mWC	kg
PNDb 1000	10	0.76	0.07	180	6 x 4	6.0	1.0 - 1.7
PNDb 1601	16	1.00	0.09	180	6 x 4	6.0	1.0 - 1.7
PNDb 1602	16	1.70	0.16	180	6 x 4	6.0	1.0 - 1.7
PNDb 1005	10	3.80	0.35	180	8 x 5*	5.0	1.2 - 1.9
PNDb 0708	7	6.30	0.58	180	8 x 5	4.0	1.2 - 1.9
PNDb 0413	4	10.50	0.97	180	8 x 5	3.0	1.2 - 1.9
PNDb 0220	2	16.70	1.55	180	12 x 9	2.0	1.2 - 1.9

All data refers to water at 20 °C.

* Stainless steel version 6 x 4 mm

Filtered compressed air 6 bar ±10 %

Air consumption at 1 m feed line 47 l/min

Max. stroke rate 180 strokes/min

Connectors

Material	Øä x Øi	Version
for PV	6, 8 and 12 mm	Hose nozzle with clamping ring
for stainless steel SS	6, 8 and 12 mm	Swagelok system screw connection

Materials in contact with medium

	Liquid end	Intake/pressure connection	Seals	Balls
PVT	PVDF	PVDF	PTFE	Ceramic
SST	Stainless steel M. No. 1.4404	Stainless steel M. No. 1.4404	PTFE	Ceramic

DEVELOPAN® Metering diaphragm with PTFE coating.

Metering reproducibility ±2 % when used in accordance with operating instructions. Permissible ambient temperature -10 °C to +50 °C.

1.6 Pneumados b Metering Pumps

1.6.2 Identcode Ordering System

Pneumados b

PNDb	Type	Capacity								
		bar	l/h							
	1000	10.0	0.76							
	1601	16.0	1.00							
	1602	16.0	1.70							
	1005	10.0	3.80							
	0708	7.0	6.30							
	0413	4.0	10.50							
	0220	2.0	16.70							
		Liquid end/Valves material								
		PV	PVDF/PVDF							
		SS	SS Stainless steel 1.4404/1.4404							
			Seals/diaphragm material							
			S	Metakorin diaphragm with Viton-B seal						
			T	Standard diaphragm with PTFE seal						
			X	Without delivery unit						
				Liquid end version						
				0	Without bleeder, without valve spring only for SS					
				1	Without bleeder, with valve springonly for SS					
				2	With bleeder, without valve spring only for PV					
				3	With bleeder, with valve spring only for PV					
				X	Without delivery unit					
					Hydraulic connectors					
					0	Standard connection as per technical data				
						Version				
						0	With ProMinent logo			
							Power connector			
							0	G 1/4 connector, compressed air 6 bar		
							1	6 x 4 connector, compressed air 6 bar		
								Control type		
								0	Single-acting (standard), without control valves	
								1	Electropneumatic actuation, with electric clock generator 24 V DC, solenoid valve 24 V DC, wall bracket and mounting material for solenoid valve	
									Approvals	
									01	CE

1.6.3 Sample Order For Accessories

	Order no.
1 x PVC foot valve with filter and Ø 6 back pressure ball	924557
1 x PVC dosing valve with Ø 6 - R 1/2 ball check valve	924680
1 x 5 m suction and discharge pipe as compressed air line, PE 6 x 4 mm	1004492
1 x compressed air connector for Pneumados G 1/4 - 6 mm quick release connector LCK 1/4"	354641
1 x wall bracket Pneumados including fixtures and fittings	1030028

For electrical controller

	Order no.
1 x 3/2-way solenoid valve MHE3, 24Vdc, with connection fittings 6/4mm	1030275
1 x retaining bracket for solenoid valve	1030276
1 x sound absorber for solenoid valve	1030277
1 x electrical pulse generator 30-180 strokes/min., 24Vdc	1030351

Electrical/Pneumatic controller

Schematic diagram

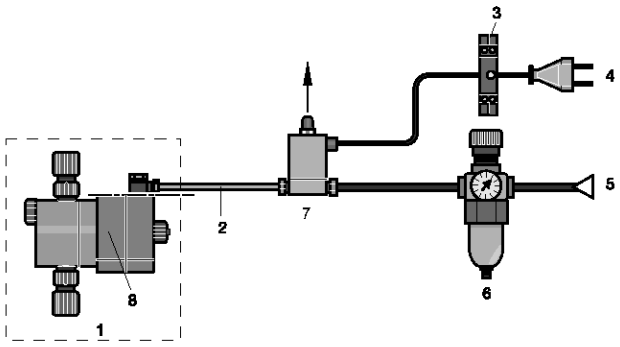

1 Pneumados supply limit
2 PE 6x4 max. 1 m
3 electrical pulse generator
4 230 V/50-60 Hz mains connector
5 compressed air 6 bar
6 maintenance unit
7 3/2 way solenoid valve with sound absorber
8 Pneumados

pk_1_035

1.6 Pneumados b Metering Pumps

1.6.4 Spare Parts Kits

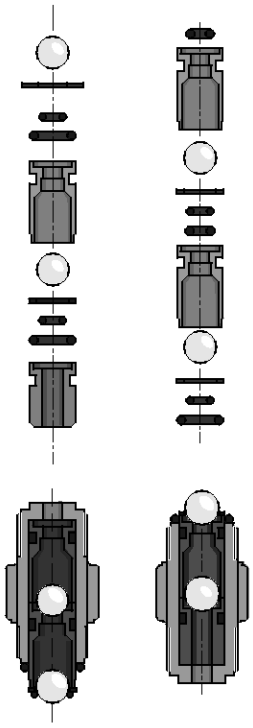

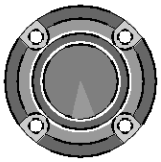

pk_1_008

Replacement parts kit for Pneumados b consisting of

1 Metering diaphragm
1 Suction port compl.
1 Pressure connector compl.
2 Valve balls
1 Kit seals
1 Connecting kit

Stainless steel version without suction and pressure valve compl.

Type		Order no.
Type 1000	PVT	1023107
	SST	1001729
Type 1601	PVT	1023108
	SST	1001730
Type 1602	PVT	1023109
	SST	1001731
Type 1005	PVT	1023110
	SST	1001732
Type 0708	PVT	1023111
	SST	1001733
Type 0413	PVT	1023112
	SST	1001734
Type 0220	PVT	1023113
	SST	1001735

1.7 DULCO®flex Peristaltic Pumps

1.7.1 DULCO®flex DF2a

- Capacity range 0.4-2.4 l/h at max. 1.5 bar back pressure
- Hose material: Tygon® or PharMed®
- Control and/or quantity control via mains ON/OFF
- Practically silent operation
- Self-priming against max. 1.5 bar
- Gentle metering
- Sprung rollers for constant rolling pressure and extended service life of hose

The DULCO®flex is a peristaltic pump. The metering chemical is displaced in the direction of flow as rotor squeezes the hose. No valves are required which ensures that the chemical is treated gently.

Typical applications are processes in which only a limited feed pressure is required such as the metering of conditioning agents in private pools.

The robust, chemical-resistant PPE housing is protected on all sides from spray (IP 65), which guarantees its universal application capability. OEM versions are available on request.

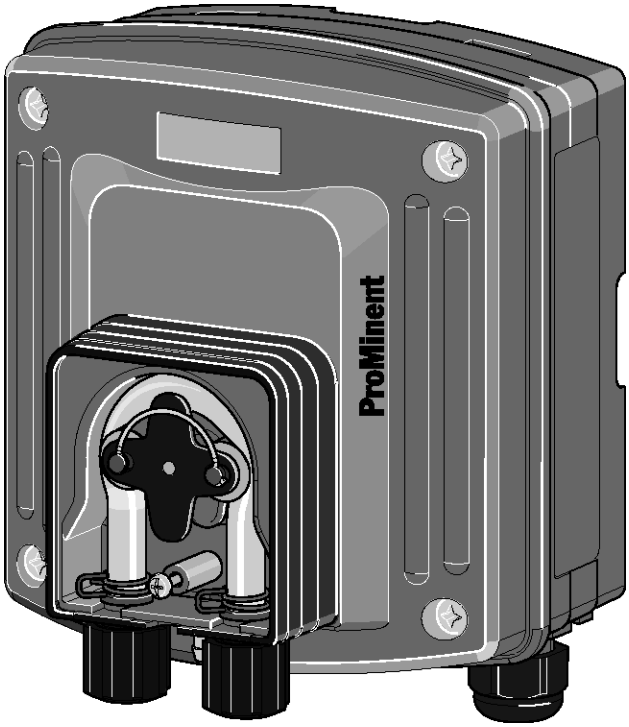

pk_1_130

1.7 DULCO®flex Peristaltic Pumps

1.7.2 Identcode Ordering System

DULCO®flex System DF2a

DF2a	Type	Capacity bar	l/h	Hose material		Version		Hydraulic connectors		Power supply		Cable and plug		Drive		Installation		Accessories	
	0204	1.5	0.4	P	PharMed®	0	With ProMinent® logo	0	Connector for hose 6/4 mm priming and discharge side	A	230 V ± 10 %, 50/60 Hz	0	No mains lead	0	Mains ON/OFF	W	Wall mounted	0	No accessories
	0208	1.5	0.8	T	Tygon®	1	Without ProMinent® logo	9	Connector for hose 10/4 mm discharge side only	B	115 V ± 10 %, 50/60 Hz	1	With 2 m mains lead, open ended						
	0216	1.5	1.6	V	Viton® for fragrances (special version)														
	0224	1.5	2.4																

Tygon®, Viton® and PharMed® are registered trademarks

Technical Data

Type	bar	Capacity l/h	Frequency rpm	Connector size o dia. x i dia.	Suction height mWC	Intake head mWC
DULCO®flex DF2a						
0204	1.5	0.4	5	6x4/10x4	4	3
0208	1.5	0.8	10	6x4/10x4	4	3
0216	1.5	1.6	20	6x4/10x4	4	3
0224	1.5	2.4	30	6x4/10x4	4	3

Admissible ambient temperature:	10-45 °C
Power consumption approx.:	5 W
Switching duration:	100 %
Enclosure rating:	IP 65

All data refers to water at 20 °C.

	Order no.
Spare hose set, complete, PharMed®	1009480
Spare hose set Tygon®	1009481
replacement hose compl. Viton®	1023842

1.7 DULCO®flex Peristaltic Pumps

1.7.3 DULCO®flex DF3a

- Feed rate range 0.4 - 2.4 l/h at max. 1.5 bar backpressure
- Hose material Viton®, used specifically for metering of fragrances in wellness applications
- Control of two further peristaltic pumps for different fragrances
- Control of a solenoid valve for the diluent water
- Almost silent operation
- Self-priming against max. 1.5 bar
- Sprung rollers for constant rolling pressure and increased service life of the hose

The DULCO®flex DF3a was specifically developed for metering fragrances in wellness facilities. This pump can be used wherever fragrances are metered in small quantities. Typical areas of application include the aroma infusion of douse water in saunas, steambaths, and whirlpools.

The metering pump is equipped with a process timer which can control two further peristaltic pumps for other essences. Since the essences used in saunas must not be used undiluted on the oven, the DF3a is equipped with three relays for controlling the diluent water.

To save essences when the sauna is not in use, the pump features a contact input to which e.g. a door contact or motion sensor can be connected. This ensures metering of fragrances only when the sauna is in use.



P_DX_0003_SW

1.7 DULCO®flex Peristaltic Pumps

1.7.4 Identcode Ordering System

DULCO®flex system DF3a

| DF3a | Application | | |

1.7 DULCO®flex Peristaltic Pumps

1.7.5 DULCO®flex DF4a

- Feed rate range 0.4 - 12 l/h, 4 - 2 bar
- Hose material PharMed® and Tygon®
- Powerful stepper motor, speed-controllable
- Continuous adjustment of the metering rate manually or externally through contact or analogue signal 0/4-20 mA
- Suction function (high speed)
- Sprung rollers for constant rolling pressure and increased service life of the hose
- Switchable output change, e.g. increase when needed or off-peak reduction
- Display of the metering rate in l/h
- Reversible direction of rotation, e.g. backflushing (active carbon only)
- Housing IP rating IP 65 pursuant to DIN EN 60529

- Pump type 04004 with 0.5 l/h at 4 bar

The DULCO®flex DF4a was developed for the dosing of chemicals in the swimming pool sector.

It is offered in three versions and both the operating menu as well as the inputs and outputs are coordinated to the respective application.

1 "Chemical pump" as a volume-adjustable dosing pump for general applications (from 3rd quarter of 2010).

2 "Metering of active carbon" with reversible direction of rotation for backflushing the hose over the entire output range.

3 "Metering of flocculants" from approx. 5 ml/h of continuous capacity. Up to two auxiliary inputs can be configured, enabling an increase in capacity in the event of a sudden rise in load as well as night setback of dosing volume.

The dosing volume can either be set to l/h in the display or specified via external control signals. The pumps can process contact signals as well as analog signals, for instance 0/4 - 20 mA or 0 - 10 V.

The pump can be used for a wide range of different metering tasks thanks to its universal controllability and four power stages.

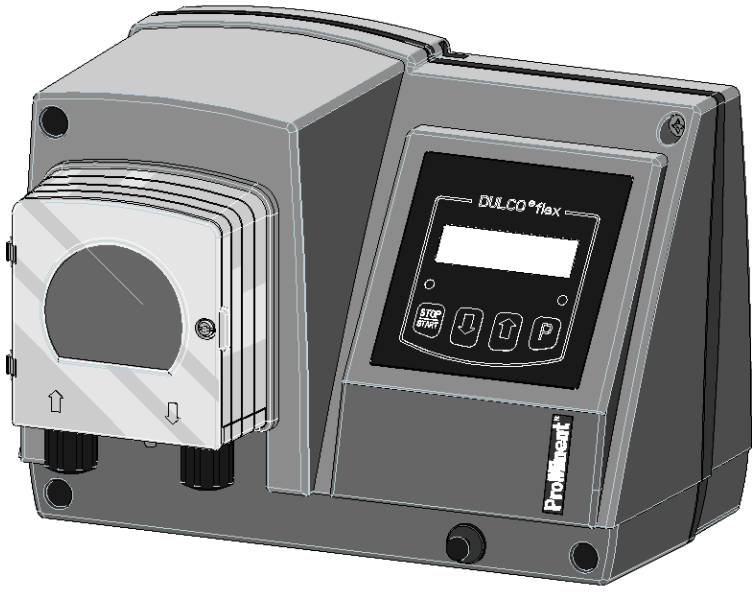

P_DX_0006_SW

1.7 DULCO®flex Peristaltic Pumps

1.7.6 Identcode Ordering System

DULCO®flex system DF4a

DF4a	Application															
	0	Chemical pump														
	A	Active carbon metering														
	F	Flocculant metering														
		Installation														
		W	Wall mounting													
			Version													
			0	With ProMinent® logo												
			1	Without ProMinent® logo												
				Type	**Capacity**											
					bar	**l/h**										
				04004	4.0	0.5										
				04015	4.0	1.5										
				03060	2.5	6.0										
				02120	2.0	12.0										
					Hose material											
					P	PharMed®										
					T	Tygon®										
						Hydraulic connectors										
						0	Standard connection 6x4									
						9	Special connection 10x4 pressure side									
							Power supply									
							U	100 - 240 VAC, 50/60 Hz								
								Cable and plug								
								0	Without cable							
								1	With cable 2.0 m; open end							
								A	With cable 2.0 m; Euro connector							
								B	With cable 2.0 m; Swiss connector							
									Accessories							
									0	Without accessories						
									2	with lip-seal metering valve PCB and 10 m PE metering line						
										Hardware-flaring						
										0	None					
											Language default					
											00	Language-neutral				
												Relay				
												1	Fault signalling relay, drop-out action			
												3	Fault signalling relay, pick-up action			
													Control Variants			
													0	manual + external contact		
													2	manual + external contact and analogue 0/4 - 20 mA		
													8	manual + external contact and analogue 0/4 - 20 mA + 0 - 10 V		
													C	as "8" and CANopen		
														Further input		
														1	Pause + 2-stage level + AUX1	
														2	Pause + 1-stage level + AUX1 + AUX2	
															Pause/level	
															0	Pause break contact + level break contact
																Approvals
																01 CE-Symbol

Tygon® and PharMed® are registered trademarks.

Technical Data

Type	bar	Capacity l/h	Speed rpm	Connector size o dia. x i dia.	Suction height mWC	Intake head mWC
04004	4.0	0.5	0-85	6x4/10x4	4	3
04015	4.0	1.5	0-85	6x4/10x4	4	3
03060	2.5	6.0	0-85	6x4/10x4	4	3
02120	2.0	12.0	0-85	6x4/10x4	4	3

Permissible ambient temperature: 10-45 °C
Approx. power consumption: 24 W
Switching duration: 100 %
Enclosure rating: IP 65

All data refers to water at 20 °C.

1.8 Mechanical-Hydraulic Accessories

1.8.1 Foot Valves

At end of metering line to protect against soiling and prevent backflow, with screen filter and non-return ball. For connections 6/4, 8/5, 12/6, 12/9 with ceramic weight.

PPE Foot valve

PP body, EPDM seals

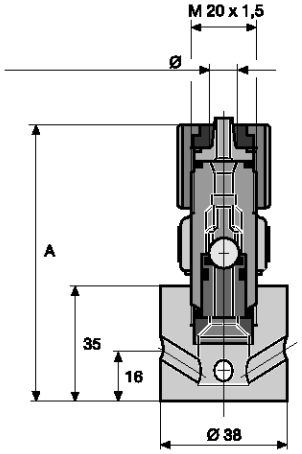

pk_1_038

Connector	oØ x iØ mm	A mm	fig.	Order no.
6/4 for hose	6 x 4	84	pk_1_038	924558
8/5 for hose	8 x 5	84	pk_1_038	809468
12/9 for hose	12 x 9	87	pk_1_038	809470
10/4 for hose	10 x 4	87	pk_1_038	1002916
12/6 for hose	12 x 6	87	pk_1_038	809469
6/4 for hose	6 x 4	57	pk_1_037	914554
G 3/4 - DN 10 for hose	20 x 15 and 24 x 16	93	P_AC_0206_SW	809465

PPB Foot valve

PP body, FPM (FPM) seals

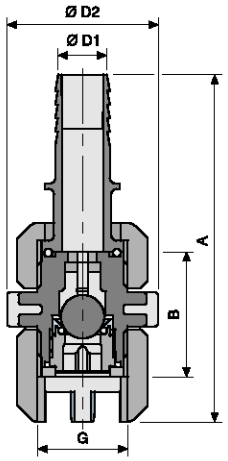

P_AC_0206_SW

Connector	oØ x iØ mm	A mm	fig.	Order no.
6/4 for hose	6 x 4	84	pk_1_038	924559
8/5 for hose	8 x 5	84	pk_1_038	924683
12/9 for hose	12 x 9	87	pk_1_038	924684
10/4 for hose	10 x 4	87	pk_1_038	1002915
12/6 for hose	12 x 6	87	pk_1_038	924685
G 3/4 - DN 10 for hose	20 x 15 and 24 x 16	93	P_AC_0206_SW	790189

PCB Foot valve

PVC housing, FPM seals.

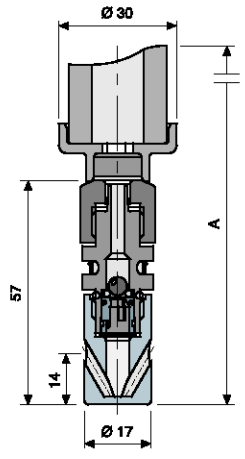

P_AC_0207_SW

Connector	oØ x iØ mm	A mm	fig.	Order no.
6/4 for hose	6 x 4	84	pk_1_038	924557
8/5 for hose	8 x 5	84	pk_1_038	924562
12/9 for hose	12 x 9	87	pk_1_038	924564
10/4 for hose	10 x 4	87	pk_1_038	1002917
12/6 for hose	12 x 6	87	pk_1_038	924563
6/4 for hose	6 x 4	57	pk_1_037	914505
G 3/4 - DN 10 for hose	20 x 15 and 24 x 16	93	P_AC_0206_SW	809464

1.8 Mechanical-Hydraulic Accessories

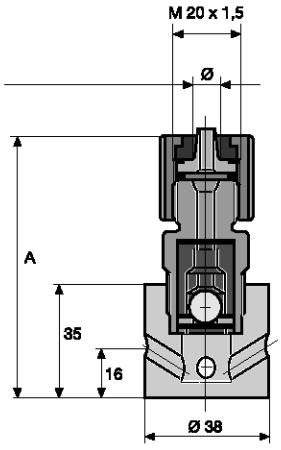

pk_1_040

PVT Foot valve

PVDF housing, PTFE seals.

Connector	oØ x iØ mm	A mm	fig.	Order no.
6/4 for hose	6 x 4	79	pk_1_040	1024705
8/5 for hose	8 x 5	79	pk_1_040	1024706
12/9 for hose	12 x 9	82	pk_1_040	1024707
DN 10 for hose	24 x 16	92	P_AC_0206_SW	1029471

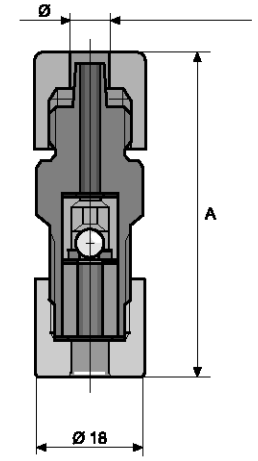

pk_1_039

TT1 Foot valve

PTFE housing and seals, for connections 6/4, 8/5, 12/6, 12/9 with ceramic weight.

Connector	oØ x iØ mm	A mm	fig.	Order no.
6/4 for hose	6 x 4	79	pk_1_040	809455
8/5 for hose	8 x 5	79	pk_1_040	809471
12/9 for hose	12 x 9	82	pk_1_040	809473
12/6 for hose	12 x 6	82	pk_1_040	809472
6/4 for hose	6 x 4	52	pk_1_039	914349
G 3/4 - DN 10	fusion coupler d16	93	P_AC_0202_SW	809466

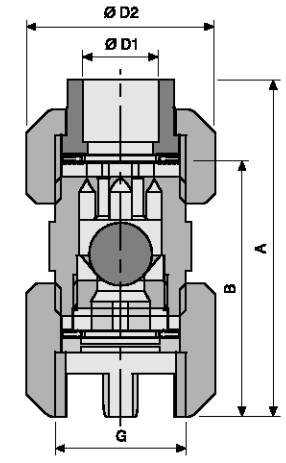

P_AC_0202_SW

1.8 Mechanical-Hydraulic Accessories

SS1 Foot valve

Stainless steel 1.4404 housing, PTFE seals. A support sleeve is required for hose connections 6/4, 8/5, 12/9.

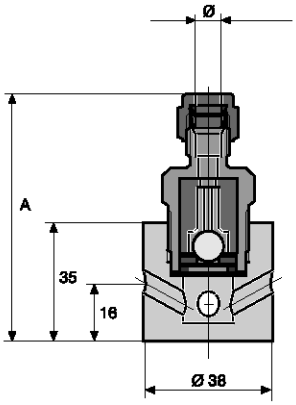

P_AC_0229_SW1

Connector	oØ x iØ mm	A mm	fig.	Order no.
6/4 for pipe 6 x 5 mm / hose	6 x 4	74	P_AC_0229_SW1	924568
8/5 for pipe 8 x 7 mm / hose	8 x 5	74	P_AC_0229_SW1	809474
12/9 for pipe 12 x 10 mm / hose	12 x 9	77	P_AC_0229_SW1	809475
1/4" NPT for SS2		70	pk_1_031_SW1	924567
G 3/4 - DN 10 with socket Rp 3/8		67	P_AC_0204_SW	809467

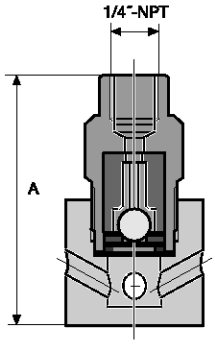

pk_1_031_SW1

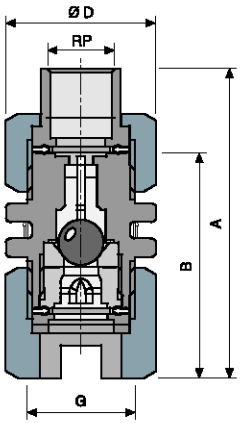

P_AC_0204_SW

1.8 Mechanical-Hydraulic Accessories

1.8.2 Injection Valves

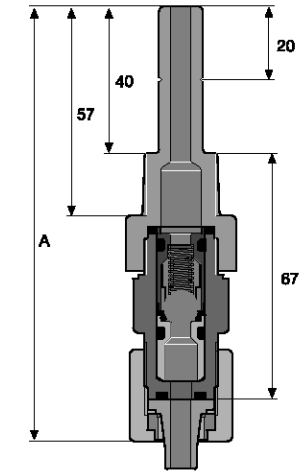

pk_1_105

For connection of discharge line to point of injection. Injection valve with ball check. Spring loaded PP, PVC, PVDF and stainless steel versions, with Hastelloy C spring, 0.5 bar response pressure (for R 1/4 stainless steel 1.4571 spring, response pressure approx. 1 bar). Installation in any position.

Vertical installation from below for TT version without spring. Valve spring can be retrofitted. Materials as pump liquid ends.

Important: Injection valves and discharge lances are not intended as completely sealed units!

PPE Injection valves

PP/PVDF housing, EPDM seals with non-return ball, spring-loaded with Hastelloy C spring, prepressure approx. 0.5 bar with extended screwed socket.

Applications when using appropriate metering lines

25 °C - max. operating pressure 16 bar

45 °C - max. operating pressure 9 bar

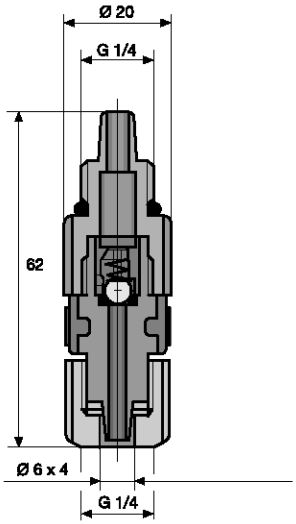

pk_1_042

Connection	oØ x iØ mm	A mm	fig.	Order no.
6/4 - R 1/2 for PE/PTFE pipe	6 x 4	119	pk_1_105	924681
8/5 - R 1/2 for PE/PTFE pipe	8 x 5	119	pk_1_105	809476
12/9 - R 1/2 for PE/PTFE pipe	12 x 9	119	pk_1_105	809478
10/4 - R 1/2 for PVC hose	10 x 4	119	pk_1_105	1002920
12/6 - R 1/2 for PVC hose	12 x 6	119	pk_1_105	809477
6/4 - G 1/4 for PE/PTFE pipe*	6 x 4	62	pk_1_042	914184
G 3/4 - DN 10 for PVC hose	24 x 16	83	pk_2_029	809461

* stainless steel 1.4571 valve spring, priming pressure approx. 1 bar.

PPB Injection valves

PP/PVDF housing, FPM seals with spring-loaded non-return ball, prepressure approx. 0.5 bar.

Applications when using appropriate metering lines

25 °C - max. operating pressure 16 bar

45 °C - max. operating pressure 9 bar

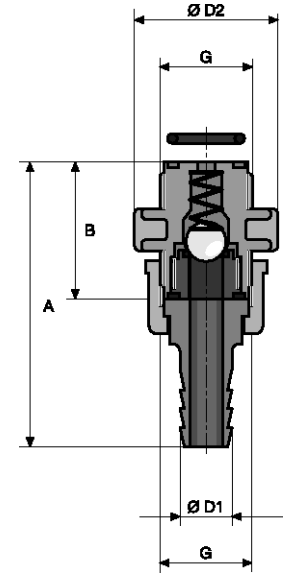

pk_2_029

Connection	oØ x iØ mm	A mm	fig.	Order no.
6/4 - R 1/2 for PE/PTFE pipe	6 x 4	119	pk_1_105	924682
8/5 - R 1/2 for PE/PTFE pipe	8 x 5	119	pk_1_105	924687
12/9 - R 1/2 for PE/PTFE pipe	12 x 9	119	pk_1_105	924688
10/4 - R 1/2 for PVC hose	10 x 4	119	pk_1_105	1002921
12/6 - R 1/2 for PVC hose	12 x 6	119	pk_1_105	924689
G 3/4 - DN 10 for PVC hose	24 x 16	83	pk_2_029	790191

1.8 Mechanical-Hydraulic Accessories

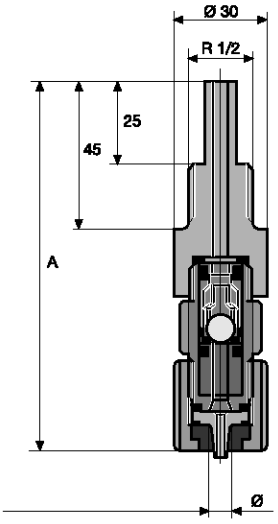

pk_1_046

PP/PTFE Injection valves

For prevention of chemical deposition. PP body, PTFE mounting insert, EPDM seals with ball check, and Hastelloy C spring approx. 0.5 bar priming pressure. (fig. pk_1_046)

Applications when using appropriate metering lines

25 °C - max. operating pressure 16 bar

45 °C - max. operating pressure 9 bar

Connection	oØ x iØ mm	A mm	fig.	Order no.
6/4 - R 1/2 for PE/PTFE pipe	6 x 4	103	pk_1_046	924588
8/5 - R 1/2 for PE/PTFE pipe	8 x 5	103	pk_1_046	924589
12/9 - R 1/2 for PE/PTFE pipe	12 x 9	106	pk_1_046	924590
10/4 - R 1/2 for PVC hose	10 x 4	106	pk_1_046	1002923
12/6 - R 1/2 for PVC hose	12 x 6	106	pk_1_046	924591

PVC/PTFE Injection valves

PVC body, PTFE mounting insert, FPM-B seals, spring loaded ball check with Hastelloy C spring, approx. 0.5 bar priming pressure.

Applications when using appropriate metering lines

25 °C - max. operating pressure 16 bar

45 °C - max. operating pressure 7 bar

Connector	oØ x iØ mm	fig.	Order no.
6/4 - R 1/2 for PE/PTFE pipe	6 x 4	pk_1_046	809450
8/5 - R 1/2 for PE/PTFE pipe	8 x 5	pk_1_046	809451
12/9 - R 1/2 for PE/PTFE pipe	12 x 9	pk_1_046	809452
10/4 - R 1/2 for PVC hose	10 x 4	pk_1_046	1002924
12/6 - R 1/2 for PVC hose	12 x 6	pk_1_046	809453

1.8 Mechanical-Hydraulic Accessories

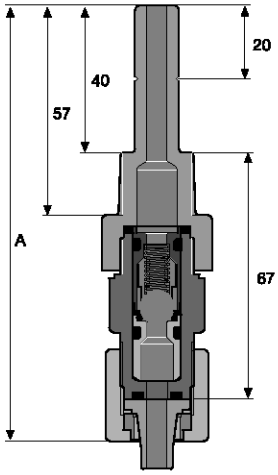

pk_1_105

PCB Injection valves

Housing made of PVC/PVDF, seals made of FPM with non-return ball spring-loaded with Hastelloy C spring, priming pressure approx. 0.5 bar, with extended screwed socket. Type 8/4 up to 25 bar.

Applications when using appropriate metering lines

25 °C - max. operating pressure 16 bar

45 °C - max. operating pressure 7 bar

Connection	oØ x iØ mm	A mm	fig.	Order no.
6/4 - R 1/2 for PE/PTFE pipe	6 x 4	119	pk_1_105	924680
8/4 - R 1/2 for PTFE line	8 x 4	119	pk_1_105	1034621
8/5 - R 1/2 for PE/PTFE pipe	8 x 5	119	pk_1_105	924592
12/9 - R 1/2 for PE/PTFE pipe	12 x 9	119	pk_1_105	924594
10/4 - R 1/2 for PVC hose	10 x 4	119	pk_1_105	1002919
12/6 - R 1/2 for PVC hose	12 x 6	119	pk_1_105	924593
6/4 - G 1/4 for PE/PTFE pipe*	6 x 4	62	–	914559
G 3/4 - DN 10 for PVC hose	24 x 16	83	pk_2_029	809460

* Spring made of 1.4571, approx. 1 bar prepressure.

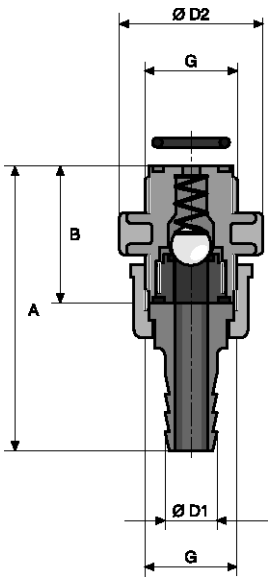

pk_2_029

PVT Injection valves

Housing PVDF, seals PTFE, with non-return ball, spring-loaded with Hast. C spring, approx. 0.5 bar priming pressure, with extended screwed socket. Type 6/3 up to 20 bar, 8/4 up to 25 bar.

Applications when using appropriate metering lines

25 °C - max. operating pressure 16 bar

45 °C - max. operating pressure 12 bar

Connection	oØ x iØ mm	A mm	fig.	Order no.
6/3 - R 1/2 for PTFE pipe	6 x 3	119	pk_1_105	1024713
6/4 - R 1/2 for PE/PTFE pipe	6 x 4	119	pk_1_105	1024708
8/4 - R 1/2 for PTFE line	8 x 4	119	pk_1_105	1034619
8/5 - R 1/2 for PE/PTFE pipe	8 x 5	119	pk_1_105	1024710
12/9 - R 1/2 for PE/PTFE pipe	12 x 9	119	pk_1_105	1024711
10/4 - R 1/2 for PVC hose	10 x 4	119	pk_1_105	1024709
12/6 - R 1/2 for PVC hose	12 x 6	119	pk_1_105	1024712
G 3/4 - DN 10 with pressure hose nozzle d16 - DN 10.	24 x 16	84	pk_2_029	1029476

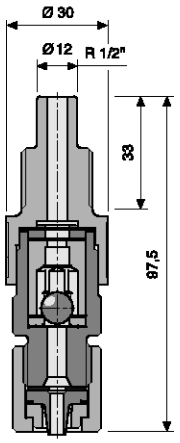

P_AC_0184_SW

TT1 Injection valves

Vertical installation from below. With ball check, without spring. Valve spring (Order No. 469404) can be retrofitted. Body and seals PTFE.

Applications when using appropriate metering lines

25 °C - max. operating pressure 10 bar

90 °C - max. operating pressure 5 bar

Connection	oØ x iØ mm	A mm	fig.	Order no.
6/4 - R 1/2 for PE/PTFE pipe	6 x 4	98	P_AC_0184_SW	809488
8/5 - R 1/2 for PE/PTFE pipe	8 x 5	98	P_AC_0184_SW	809479
12/9 - R 1/2 for PE/PTFE pipe	12 x 9	101	P_AC_0184_SW	809481
12/6 - R 1/2 for PVC hose	12 x 6	101	P_AC_0184_SW	809480
6/4 - R 1/4 for PE/PTFE pipe	6 x 4	65	–	914347
G 3/4 - DN 10 with fusion coupler d16		–	pk_2_030	809462

1.8 Mechanical-Hydraulic Accessories

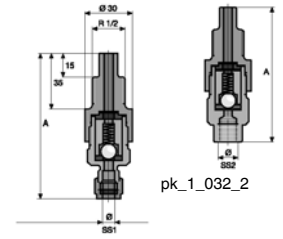

pk_1_032_1

pk_1_032_2

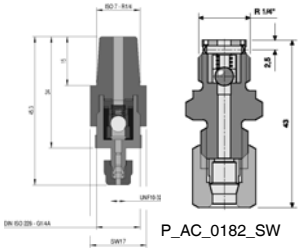

P_AC_0237_SW

P_AC_0182_SW

SS1 Injection valve

Stainless steel 1.4404 body and PTFE seals with spring loaded ball check. Spring made of Hastelloy C. with approx. 0.5 bar priming pressure, for 1.4571 R 1/4 spring, approx. 1 bar priming pressure. Ferrule is required for connection with PE/PTFE pipe.

Applications when using appropriate metering lines

25 °C - max. operating pressure 30 bar

45 °C - max. operating pressure 30 bar

Connection	oØ x iØ mm	A mm	fig.	Order no.
6 mm - R 1/2 for pipe	6 x 5	93	pk_1_032_1	809489
8 mm - R 1/2 for pipe	8 x 7	93	pk_1_032_1	809482
12 mm - R 1/2 for pipe	12 x 10	96	pk_1_032_1	809483
1/4" NPT - R 1/2 for pipe	R 1/4" NPT	89	pk_1_032_2	924597
6 mm - R 1/4 for pipe	6	43	P_AC_0182_SW	914588
1/16" - R 1/4 for pipe	1,58 and 1,5	–	pk_1_016	803251
1/8" - R 1/4 for pipe	3,18 and 3,2	–	pk_1_016	803252
G 3/4 - DN 10, sleeve	sleeve Rp 3/8	–	pk_2_030 (sect. 2.5.2)	809463

PPB Injection valves, O-ring loaded

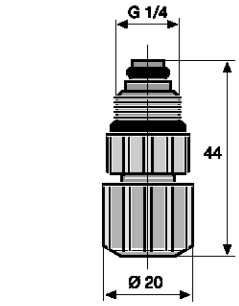

pk_1_043

PP body, (FPM) FPM seals. Priming pressure approx. 0.5 bar.

Applications when using appropriate metering lines

25 °C - max. operating pressure 16 bar

45 °C - max. operating pressure 9 bar

Connector	oØ x iØ mm	fig.	Order no.
6/4 - G 1/4	6 x 4	pk_1_043	914754
6/4 - G 1/4	6 x 4	pk_1_044	741193

PCB Injection valves O-ring loaded

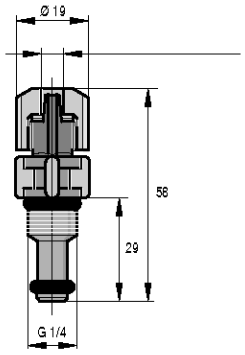

pk_1_044_SW1

PVC body, FPM (FPM) seals, priming pressure approx. 0.5 bar.

Applications when using appropriate metering lines

25 °C - max. operating pressure 16 bar

45 °C - max. operating pressure 7 bar

Connector	oØ x iØ mm	fig.	Order no.
6/4 - G 1/4	6 x 4	pk_1_043	914558
6/4 - G 1/4	6 x 4	pk_1_044	915091

1.8 Mechanical-Hydraulic Accessories

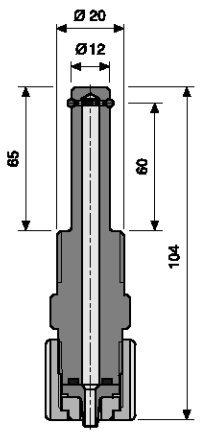

P_AC_0183_SW

PTFE Injection valves O-ring loaded

PTFE housing, FPM seals.

Applications when using appropriate metering lines

25 °C - max. operating pressure 10 bar

45 °C - max. operating pressure 6 bar

Connection	oØ x iØ mm	A mm	fig.	Order no.
6/4 – for PE/PTFE line	6 x 4	104	P_AC_0183_SW	809484
8/5 – for PE/PTFE line	8 x 5	104	P_AC_0183_SW	809485
10/4 – for PE/PTFE line	10 x 4	104	P_AC_0183_SW	1002925
12/6 – for PVC hose	12 x 6	104	P_AC_0183_SW	809487
12/9 – for PE/PTFE line	12 x 9	104	P_AC_0183_SW	809486

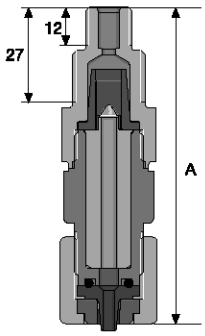

pk_1_070

Lip seal dosing valve PCB

Body PVC, seals FPM, inlet pressure approx. 0.05 bar. For dosing sodium hypochlorite and in conjunction with the peristaltic pump DF2a.

Applications when using appropriate metering lines

25 °C - max. operating pressure 2 bar

45 °C - max. operating pressure 2 bar

Connection	oØ x iØ mm	A mm	fig.	Order no.
6/4 - R 1/2 - 1/4 for PE/PTFE pipe	6 x 4	90	pk_1_070	1019953
10/4 - R 1/2 - 1/4 for PE/PTFE pipe	10 x 4	90	pk_1_070	1024697

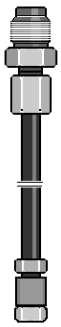

pk_1_049

Dosing Connector For Warm Water Up To 200 °C

Consists of stainless steel 1.4404 injection valve, 1 m stainless steel 1.4571 discharge line and threaded connector with reinforcing sleeve for connection of PE/PTFE pipe to stainless steel pipe.

Max. operating pressure 30 bar

Connection	fig.	Order no.
Warm water 6 mm - G 1/4	pk_1_049	913166
Warm water 6 mm - G 1/2	pk_1_049	913167
Warm water 8 mm - G 1/2	pk_1_049	913177
Warm water 12 mm - G 1/2	pk_1_049	913188

1.8 Mechanical-Hydraulic Accessories

1.8.3 Injection Lances, Non-Return Valves

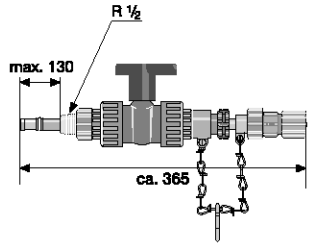

pk_1_007

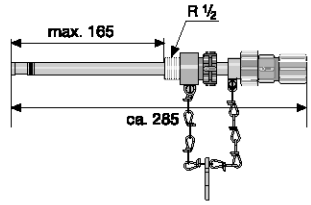

pk_1_062

PPE injection lance

For immersion depths of 20 - 165 mm, in large diameter pipe to prevent chemical deposition at the point of injection. Consisting of spring-loaded metering valve, Hastelloy C spring, ceramic ball, adjustable immersion rod and hose valve. With connectors for all hose sizes used with solenoid metering pumps: 6/4, 8/5, 12/9, 10/4 adn 12/6.

Type	Seal material	Max. pressure at 25 °C bar	fig.	Order no.
PPE without shut-off cock valve	EPDM/silicone	6	pk_1_007	1021530
PPE with shut-off cock valve	EPDM/silicone	6	pk_1_062	1021531
PCB without shut-off cock valve	FPM/silicone*	6	pk_1_007	1021528
PCB with shut-off cock valve	FPM/silicone*	6	pk_1_062	1021529

*** Caution:** The product contains adhesive joints with Tangit. Please note the resistance of the Tangit adhesive.

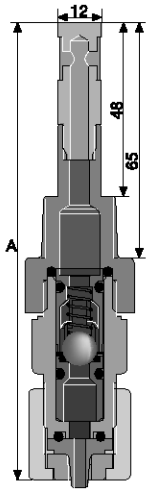

P_AC_0020_SW

Short injection lance

Metering lance with universal connection kit, thereby enabling the connection of different hose sizes from 6/4 to 12/9. Hastelloy C spring, ceramic ball and silicone hose. Material of screwed socket: PVDF.

Type	Material, valve body	Max. pressure at 25 °C bar	Seal material	A mm	fig.	Order no.
PPE	PP	16	EPDM	126	pk_1_106	1028383
PCB	PVC	16	FPM-B	126	pk_1_106	1028363
PVT	PVDF	16	PTFE	126	pk_1_106	1028081

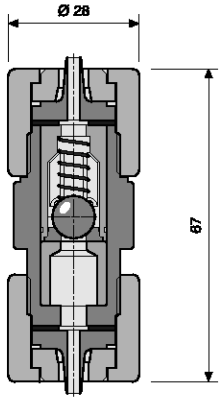

P_AC_0181_SW

PVDF non-return valve for hose installation

With connection kit on both sides for fitting in hose line.

With non-return ball, spring-loaded with Hastelloy C spring, prepressure approx. 0.5 bar.

PVDF housing, PTFE seals.

Different hose sizes from 6/4 to 12/9 can be joined by using different connection kits.

Applications when using appropriate metering lines

25 °C - max. operating pressure 16 bar

45 °C - max. operating pressure 12 bar

Connection	oØ x iØ mm	A mm	fig.	Order no.
6/4 for PE/PTFE line	6 x 4	67	P_AC_0181_SW	1030463
8/5 for PE/PTFE line	8 x 5	67	P_AC_0181_SW	1030975
10/4 for PE/PTFE line	10 x 4	67	P_AC_0181_SW	1030977
12/6 for PVC hose	12 x 6	67	P_AC_0181_SW	1030978
12/9 for PE/PTFE line	12 x 9	67	P_AC_0181_SW	1030976

1.8 Mechanical-Hydraulic Accessories

1.8.4 Back Pressure Valves/Relief Valves

Back pressure valves are used to generate a constant back pressure for precise dosing and/or to protect against overdosing, or for dosing accuracy with an open discharge or a positive pressure on the suction side. They are also used in conjunction with pulsation dampeners to produce pulsation-free or low-pulsation dosing. With fluctuating back pressure and dosing into a vacuum, we recommend the back pressure valves Type DHV-RM.

(Pressure Relief Valves/Overflow Valves see on page → 2-31)

The back pressure valves described here are designed for the full range of applications. Please consult the relevant section for each version.

Important: Back pressure valves are not intended as completely sealed units. When using with dangerous chemicals, all relevant safety measures must be observed.

Relief valves are installed in by-pass pipework, to protect pumps, pipework and fittings from excess pressure as a result of operational error or blockage in the main pipework.

If a problem arises, the valve alters the direction of fluids, feeding back into the storage tank.

Multifunction valve type MFV-DK, PVDF

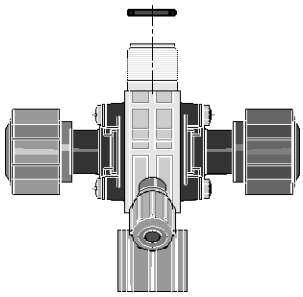

pk_1_053

Multifunction Valve for assembly directly onto the liquid end of the pump. Has the following functions:

- Back pressure valve, opening pressure approx. 1.5 bar, with open discharge or positive pressure on the suction side (black rotary knob)
- Relief valve, opening pressure approx. 6, 10 or 16 bar (red rotary knob)
- Admission aid in existing back pressure, no need to de-pressurise pipes
- Pressure relief, e.g. prior to servicing

The ProMinent® Multifunction Valve is simple to operate using smooth action rotary knobs, which return to the initial position on release. This ensures safe operation even under difficult access conditions. The ProMinent® Multifunction Valve is made from PVDF and can be used with virtually all chemicals.

Warning: Back pressure valves are not intended as completely sealed units!

Caution: The bypass line must always be connected.

Valve body	PVDF
Diaphragm	PTFE- coated
Seal	FPM and EPDM (enclosed)

Hoses see page → 1-56.

Type	Relief opening pressure*	Connection	Bypass connector	Order no.
Size I	16 bar	6/12	6/4	792011
Size I	10 bar	6/12	6/4	791715
Size I	6 bar	6/12	6/4	1005745
Size II	10 bar	6/12	12/9	792203
Size II	6 bar	6/12	12/9	740427
Size III	10 bar	DN 10	12/9	792215

* The relief opening pressure given above is the pressure at which the valve begins to open. The pressure can be up to 50 % higher until the valve is fully open depending on the type of pump.

Area of application of multifunctional valve

Size I	ALPc 1001, 1002, 1004, 1008, 0708
	Beta®, gamma/ L type 1000, 1601, 1602, 1605, 1005, 1008, 0708, 0413, 0220
	delta® Type 1608, 1612
Size II	ALPc 0419, 0230
	Beta®, gamma/ L type 1605, 1008, 0713, 0420, 0232
	delta® type 1020, 0730
Size III	delta® type 0450, 0280

For material PP, PV, NP, TT.

1.8 Mechanical-Hydraulic Accessories

Back pressure valve type DHV-S-DK, adjustable between 1-10 bar

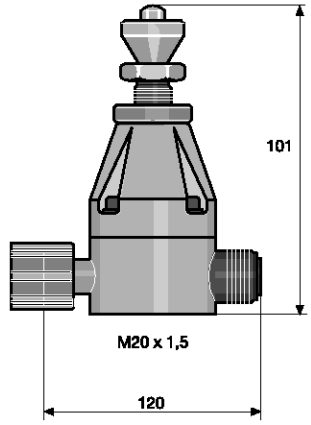

pk_1_129

Adjustable back pressure valve for mounting direct on the liquid end, to generate a constant back pressure. For precise dosing with an open discharge and with positive pressure on the suction side.

Warning: Back pressure valves are not intended as completely sealed units!

Application range: Metering pumps alpha, Beta®, gamma/ L, Pneumados b, EXtronic® and delta®

Type	Adjustable pressure	Connection	Material	Order no.
DHV-S-DK	1 – 10 bar	6 - 12 mm	PP/EPDM	302320
DHV-S-DK	1 – 10 bar	6 - 12 mm	PC/FPM*	302321
DHV-S-DK	1 – 10 bar	6 - 12 mm	TT/PTFE	302322
DHV-S-DK	1 – 10 bar	6 mm	SS	1003793
DHV-S-DK	1 – 10 bar	8 mm	SS	1003795
DHV-S-DK	1 – 10 bar	12 mm	SS	1003797

*** Caution:** The product contains adhesive joints with Tangit. Please note the resistance of the Tangit adhesive.

Back pressure valve/relief valve type DHV-S-DL, adjustable between 1-10 bar

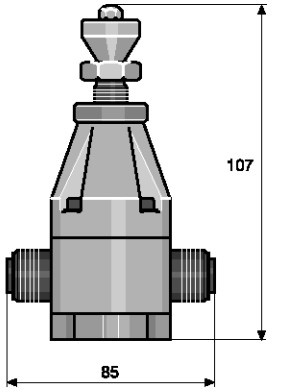

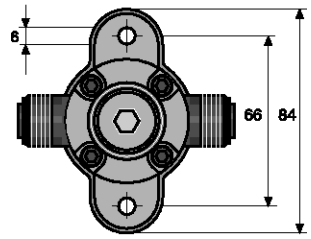

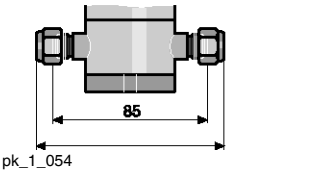

pk_1_054

Adjustable back pressure valve for mounting direct on the liquid end, to generate a constant back pressure. For precise dosing with an open discharge and with positive pressure on the suction side.

They are also used in connection with pulsation dampers for low-pulsation metering.

For use with pulsation dampener under back pressure, or long pipe, use type DHV-RM.

See section 2.5: Back pressure valves

Warning: Back pressure valves are not intended as completely sealed units!

Application range: Metering pumps alpha, Beta®, gamma/ L, Pneumados b, EXtronic® and delta®

(Pressure Relief Valves/Overflow Valves see on page → 2-31)

Type	Adjustable pressure	Connection	Material	Order no.
DHV-S-DL	1 – 10 bar	6 - 12	PP	302323
DHV-S-DL	1 – 10 bar	6 - 12	PC/FPM*	302324
DHV-S-DL	1 – 10 bar	6 - 12	TT	302325
DHV-S-DL	1 – 10 bar	6	SS	302326
DHV-S-DL	1 – 10 bar	8	SS	302327
DHV-S-DL	1 – 10 bar	12	SS	302328

For the connection, 2 connecting kits in the required hose size are to be ordered separately.

*** Caution:** The product contains adhesive joints with Tangit. Please note the resistance of the Tangit adhesive.

(Connection Kits see page → 1-79)

Pipe nipples

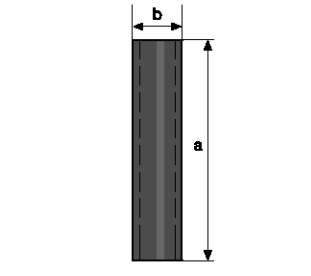

pk_1_017

For the direct connection of the pressure maintenance valve DHV-S-DL in stainless steel (SS) to the liquid end.

Type	A mm	B mm	fig.	Order no.
1.4571 pipe nipple	6	40	pk_1_017	818537
–	8	40	pk_1_017	818538
–	12	40	pk_1_017	818539

1.8 Mechanical-Hydraulic Accessories

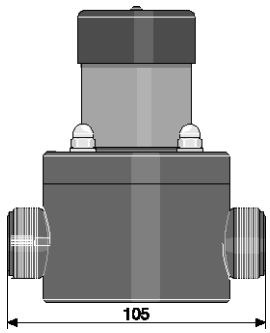

pk_1_101

Back pressure valve Type BPV-DM

Adjustable back pressure valve for mounting in the dosing line, to generate a constant back pressure and/ or for precise dosing with an open discharge as well as positive pressure on the suction side.

Warning: back pressure valves are not tight shut-off isolation devices! The installation notes in the operating instructions must be strictly observed!

Applications: metering pumps alpha, Beta®, gamma/ L, EXtronic®, Pneumados b and delta®

Type	Adjustable pressure	Connection	Material	Order no.
BPV-DM	1 – 10 bar	6 - 12	PP/EPDM	1009884
BPV-DM	1 – 10 bar	6 - 12	PP/FPMB	1009886
BPV-DM	1 – 10 bar	6 - 12	PVC/EPDM	1009885
BPV-DM	1 – 10 bar	6 - 12	PVC/FPMB	1026450

* For the connection, 2 connection kits in the required hose size must be ordered in addition.

(Connection Kits see page → 1-79)

Relief valve Type BPV-SM

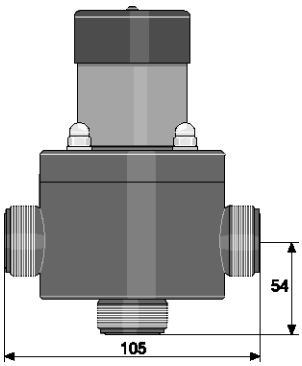

pk_1_103-2

Adjustable relief valve for mounting in the dosing line to protect against excess pressure. With additional relief line connection in the base of the valve body – no tee required for installation.

Warning: back pressure valves are not tight shut-off isolation devices! The installation notes in the operating instructions must be strictly observed!

Applications: metering pumps alpha, Beta®, gamma/ L, EXtronic®, Pneumados b and delta®

Type	Adjustable pressure	Connection	Material	Order no.
BPV-SM	1 – 10 bar	6 - 12	PPE	1009887
BPV-SM	1 – 10 bar	6 - 12	PPB	1009889
BPV-SM	1 – 10 bar	6 - 12	PCE	1009888
BPV-SM	1 – 10 bar	6 - 12	PCB	1026445

* For the connection, 3 connection kits in the required hose size must be ordered in addition.

(Connection Kits see page → 1-79)

1.8 Mechanical-Hydraulic Accessories

1.8.5 Fittings

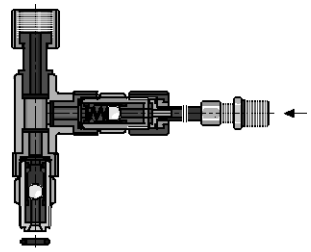

pk_1_056

Flushing Assembly

For flushing and cleaning liquid ends, discharge line and injection valve.

Manual or timer relay controlled versions. Assembly, including retrofitting, onto suction connector of metering pump. Supplied with 2 m flushing pipe and connector nipple R 3/8.

Automatic flushing assembly for flushing the pump head fully automatically is possible on request.

PPE Flushing Assembly

PP material, EPDM seal.

	fig.	Order no.
For connections 6/4, 8/5, 12/6, 12/9	pk_1_056	809909
For G 3/4 -DN 10 connector	pk_1_057	809917
For G 1 -DN 15 connector	pk_1_057	809919

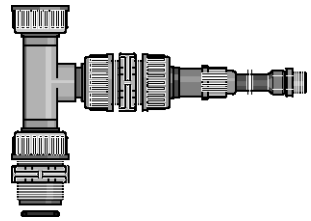

pk_1_057

PCB Flushing Assembly

Material: PVC, FPM seals

	fig.	Order no.
for connection 6/4, 8/5, 12/6, 12/9*	pk_1_056	809925
for connection G 3/4 - DN 10*	pk_1_057	809926
for connection G 1 - DN 15*	pk_1_057	803960

*** Caution:** The product contains adhesive joints with Tangit. Please note the resistance of the Tangit adhesive.

Relief Valve Assembly

Consists of back pressure valve, adjustable between 1.5 and 10 bar, DL type complete with connector parts, for assembly directly onto liquid end.

Connector sizes 6-12 mm according to pressure connector on metering pump.

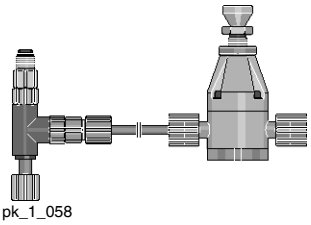

pk_1_058

Relief Valve Assembly PPE:

Material: PP, EPDM seals.

	fig.	Order no.
For connections 6/4, 8/5, 12/6, 12/9	pk_1_058	809990
G 3/4 - DN 10 connector	pk_1_059	809991
G 1 - DN 15 connector	pk_1_059	809992

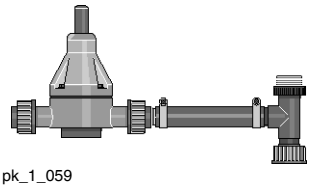

pk_1_059

Relief Valve Assembly PCB:

Material: PVC, FPM seals.

	fig.	Order no.
for connection 6/4, 8/5, 12/6, 12/9*	pk_1_058	809989
for connection G 3/4 - DN 10*	pk_1_059	809993
for connection G 1 - DN 15*	pk_1_059	914745

*** Caution:** The product contains adhesive joints with Tangit. Please note the resistance of the Tangit adhesive.

1.8 Mechanical-Hydraulic Accessories

1.8.6 Hoses, Pipes

Suction and discharge line

for metering pumps and accessories. We recommend using the original lines to ensure the mechanical connection in case of clamping ring fittings as well as compressive strength and chemical resistance.

On request, food grade version is possible.

Suction line, soft PVC

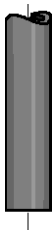

pk_1_013

Material	Length	oØ x iØ	Permissible operating pressure	Order no.
	m	mm	bar	
PVC flexible	5	6 x 4	0.5*	1004520
	5	8 x 5	0.5*	1004521
	5	12 x 9	0.5*	1004522
	10	6 x 4	0.5*	1004523
	10	8 x 5	0.5*	1004524
	10	12 x 9	0.5*	1004525
	25	6 x 4	0.5*	1004526
	25	8 x 5	0.5*	1004527
	25	12 x 9	0.5*	1004528
	50	6 x 4	0.5*	1004529
	50	8 x 5	0.5*	1004530
	50	12 x 9	0.5*	1004531
	Sold in meters	19 x 15	0.5*	037020

* Admissible operating pressure at 20 °C in accordance with DIN EN ISO 7751, subject to chemical resistance and correct assembly.

Suction and discharge line, soft PVC with woven fabric core

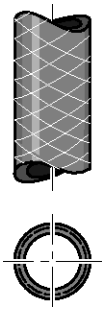

pk_1_060

Material	Length	oØ x iØ	Permissible operating pressure	Order no.
	m	mm	bar	
Fabric reinforced flexible PVC	5	10 x 4	18*	1004533
	5	12 x 6	17*	1004538
	10	10 x 4	18*	1004534
	10	12 x 6	17*	1004539
	25	10 x 4	18*	1004535
	25	12 x 6	17*	1004540
	50	10 x 4	18*	1004536
	50	12 x 6	17*	1004541
	Sold in meters	24 x 16	16*	037040
	Sold in meters	27 x 19	16*	037041

* permissible operating pressure at 20°C in accordance with DIN EN ISO 7751, 1/4 of the bursting pressure subject to chemical resistance and correct assembly.

For socket welded and PVC cemented rigid PP and PVDF pipe, pipes and fittings with a pressure rating of PN 16 or PN 10 bar are to be used.

Caution:

The resistance of soft PVC hoses is not identical with that of hard PVC. Please observe the resistance for PVC soft as well as the cleaning instructions when using the equipment for foodstuff applications (see homepage).

1.8 Mechanical-Hydraulic Accessories

Suction and discharge, PE

Material	Length	oØ x iØ	Permissible operating pressure	Order no.
	m	mm	bar	
Polyethylene	5	6 x 4	10*	1004492
	5	8 x 5	10*	1004493
	5	12 x 9	7*	1004504
	10	6 x 4	10*	1004505
	10	8 x 5	10*	1004506
	10	12 x 9	7*	1004507
	25	6 x 4	10*	1004508
	25	8 x 5	10*	1004509
	25	12 x 9	7*	1004510
	50	6 x 4	10*	1004511
	50	8 x 5	10*	1004512
	50	12 x 9	7*	1004513

* Admissible operating pressure at 20 °C in accordance with DIN EN ISO 7751, subject to chemical resistance and correct assembly

Suction and discharge lines, PTFE

Material	Length	oØ x iØ	Permissible operating pressure	Order no.
	m	mm	bar	
PTFE	Sold in meters	1.75 x 1.15	12*	037414
	Sold in meters	3.2 x 2.4	8*	037415
	Sold in meters	6 x 3	20*	1021353
	Sold in meters	6 x 4	15*	037426
	Sold in meters	8 x 4	25*	1033166
	Sold in meters	8 x 5	17*	037427
	Sold in meters	12 x 9	11*	037428
	Sold in meters	19 x 16	6*	037430

* Admissible operating pressure at 20 °C in accordance with DIN EN ISO 7751, subject to chemical resistance and correct assembly

Stainless steel pipes

Material	Length	oØ x iØ	Permissible operating pressure	Order no.
	m	mm	bar	
Stainless steel pipe 1.4435	Sold in meters	1.58 x 0.9	400*	1020774
	Sold in meters	3.175 x 1.5	400*	1020775
	Sold in meters	6 x 5	175*	015738
	Sold in meters	6 x 4	185*	015739
	Sold in meters	8 x 7	160*	015740
	sold in meter	12 x 10	200*	015743

* Admissible operating pressure at 20 °C in accordance with DIN EN ISO 7751, subject to chemical resistance and correct assembly

Hose Cutting Kit

Hose Cutting Set for Plastic Pipes up to a Diameter of 25 mm. Manufacturer: Gedore.

	Order no.
Hose Cutting Kit	1038571

1.8 Mechanical-Hydraulic Accessories

1.8.7 Pressure Accumulator

PP Pressure accumulator

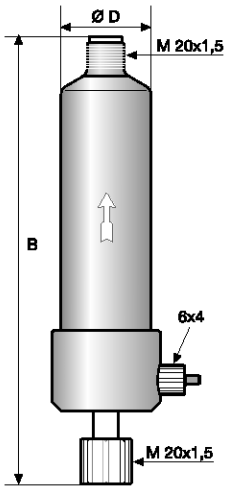

pk_1_006

Caution: An overflow valve must always be installed when using pressure accumulators.

Operating range

20 °C - max. operating pressure 10 bar

40 °C - max. operating pressure 6 bar

	Volume	Permissible stroke volume	Connection	fig.	Order no.
	l	ml			
Size 0*	0.35	1.0	M 20 x 1,5	pk_1_006	1021157
Size I	0.35	2.5	DN 8	pk_1_065	243218
Size II	0.35	5.0	d 16–DN 10	pk_1_065	243219
Size II	1.00	5.0	d 20–DN 15	pk_1_065	243220

* With vent valve. Installed directly at pressure connection.

	Connection	A	B	Ø D
Size 0	M 20 x 1,5	-	225	49
Size I	DN 8	150	170	75
Size II	DN 10	192	220	110
Size II	DN 15	200	220	110

PVC Pressure accumulator

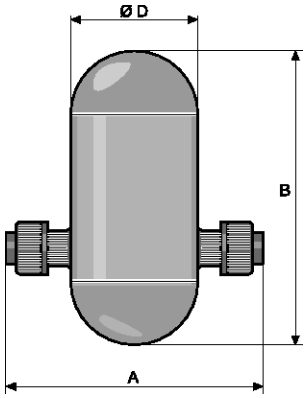

pk_1_065

Caution: An overflow valve must always be installed when using pressure accumulators.

Operating range

20 °C - max. operating pressure 10 bar

40 °C - max. operating pressure 6 bar

	Volume	Permissible stroke volume	Connection	fig.	Order no.
	l	ml			
Size 0**	0.15	1.0	M 20 x 1,5	pk_1_006	1021120*
Size I	0.35	2.5	DN 8	pk_1_065	243203*
Size II	1.00	5.0	d 16–DN 10	pk_1_065	243204*
Size II	1.00	5.0	d 20–DN 15	pk_1_065	243205*

*** Caution:** The product contains adhesive joints with Tangit. Please note the resistance of the Tangit adhesive.

** With bleed valve. Installation directly a the pressure connector.

	Connection	A	B	Ø D
Size 0	M 20 x 1,5	-	225	49
Size I	DN 8	150	170	75
Size II	DN 10	192	220	110
Size II	DN 15	200	220	110

1.8 Mechanical-Hydraulic Accessories

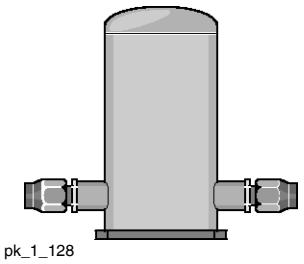

pk_1_128

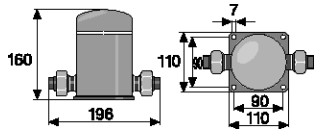

pk_1_063

Stainless steel accumulator

Max. operating pressure 10 bar.

	Volume l	Permissible stroke volume ml	Connection	fig.	Order no.
Size 0	0.15	2.5	for pipe oØ 6	pk_1_128	914510
Size I	0.35	2.5	for pipe oØ 8	pk_1_128	914511
Size I	1.00	2.5	for pipe oØ 12	pk_1_128	914512
Size II*	1.00	5.0	G 3/4 – DN 10	pk_1_063	914756

* Threaded sleeve insert G 3/8.

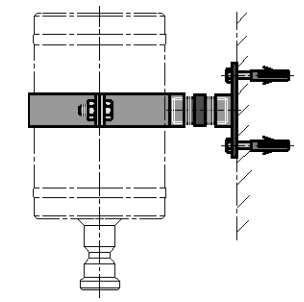

pk_1_061

Wall mounting for accumulator

For PP and PVC versions, consisting of clamping ring, mounting plate and connecting nipple.

			Order no.
For size I accumulator - 0.35 l	0,35 l	Ø 75	818501
For size II accumulator - 1l	1 l	Ø 110	818502

1.8 Mechanical-Hydraulic Accessories

1.8.8 Pulsation Dampeners (In-line)

The pulsation dampener is used to produce minimal pulsation dosing and to reduce flow resistance in long discharge lines.

The cushion of gas located between the hose and the housing is compressed by a thrust stroke from the dosing pump, allowing a quantity of feed chemical to pass along the discharge line. On the next suction stroke, the excess pressure created by the cushion of gas forces the chemicals through the pipe. The gas is now released from pressure, and returns to its original volume.

Important: The pulsation dampeners must be protected by an overflow valve.

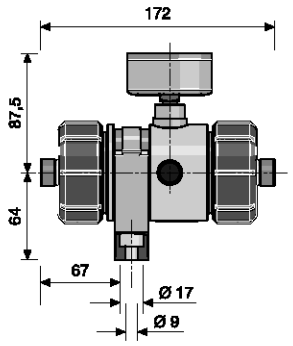

P_AC_0180_SW

In-line Dampener PP

Operating conditions

5 - 30 °C - max. operating pressure 10 bar
40 °C - max. operating pressure 8 bar
60 °C - max. operating pressure 4 bar

	Volume l	Dampener diaphragm	Seal material	Connection	Order no.
PPE in-line dampener	0.05	CSM*	EPDM	M 20 x 1.5	1026768
PPB in-line dampener	0.05	FPM	FPM	M 20 x 1.6	1026771
PPE in-line dampener	0.05	CSM*	EPDM	G 3/4 - DN 10	1026769
PPB in-line dampener	0.05	FPM	FPM	G 3/4 - DN 10	1026772

* chlorosulfonated polyethylene

PVC In-line dampener

Operating conditions

5 - 20 °C - max. operating pressure 10 bar
40 °C - max. operating pressure 6 bar
60 °C - max. operating pressure 2 bar

	Volume l	Dampener diaphragm	Seal material	Connection	Order no.
PCE in-line dampener	0.05	CSM*	EPDM	M 20 x 1.5	1026774
PCB in-line dampener	0.05	FPM	FPM	M 20 x 1.6	1026777
PCE in-line dampener	0.05	CSM*	EPDM	G 3/4 – DN 10	1026775
PCB in-line dampener	0.05	FPM	FPM	G 3/4 – DN 10	1026778

* chlorosulfonated polyethylene

Threaded end plug

Threaded end plugs to close off the outlet side of the damper together with T-piece installation.

Material	Connection	Order no.
PP	M 20 x 1,5	1030200
PP	G 3/4 - DN 10	1001352
PVC	M 20 x 1,5	1030458
PVC	G 3/4 - DN 10	1001349

1.8 Mechanical-Hydraulic Accessories

1.8.9 Suction Lances, Suction Kit without Level Switch

Variable suction lance without level switch

680 mm long for connection to disposable container of 5 - 60 litres, consisting of foot valve, retaining tube, vertically adjustable screw cap and 2 m intake hose.

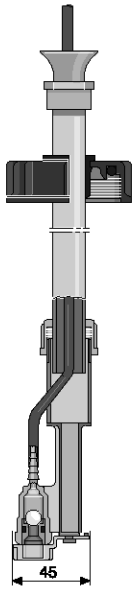

pk_1_067

PPE

Material, retaining tube and foot valve	PP
Seal material	EPDM
Hose Material	PE

Material	Hose o Ø x i Ø mm		fig.	Order no.
PPE	6 x 4	For 50 mm container opening	pk_1_067	790539
PPE	8 x 5	For 50 mm container opening	pk_1_067	790540
PPE	12 x 9	For 50 mm container opening	pk_1_067	790541

PCB

Material, retaining tube and foot valve	PVC
Seal material	FPM
Hose Material	soft PVC

Material	Hose o Ø x i Ø mm		fig.	Order no.
PCB	6 x 4	For 50 mm container opening	pk_1_067	790536
PCB	8 x 5	For 50 mm container opening	pk_1_067	790537
PCB	12 x 9	For 50 mm container opening	pk_1_067	790538

Screw cap

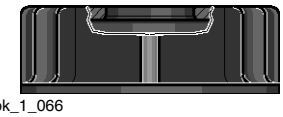

pk_1_066

For tanks with opening Ø 44, customers need to order the Ø 44 screw cap as a spare part to replace Ø 50 screw cap.

	Order no.
Ø 44 screw cap	811626

1.8 Mechanical-Hydraulic Accessories

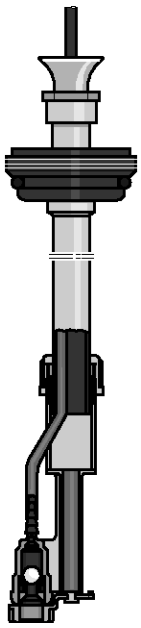

pk_1_125

Variable suction lance for 200 litre drum without level switch

1000 mm long for connection to 200 litre drum, with foot valve, retaining tube, vertically adjustable screw plug and 3 m intake hose.

PPE

Material, retaining tube and foot valve	PP
Seal material	EPDM
Hose Material	PE

Material	Hose o Ø x i Ø mm		fig.	Order no.
PPE	6 x 4	For 2" container opening DIN S 70 x 6	pk_1_125	790545
PPE	8 x 5	For 2" container opening DIN S 70 x 6	pk_1_125	790546
PPE	12 x 9	For 2" container opening DIN S 70 x 6	pk_1_125	790547

PCB

Material, retaining tube and foot valve	PVC
Seal material	FPM
Hose Material	soft PVC

Material	Hose o Ø x i Ø mm		fig.	Order no.
PCB	6 x 4	For 2" container opening DIN S 70 x 6	pk_1_125	790542
PCB	8 x 5	For 2" container opening DIN S 70 x 6	pk_1_125	790543
PCB	12 x 9	For 2" container opening DIN S 70 x 6	pk_1_125	790544

1.8 Mechanical-Hydraulic Accessories

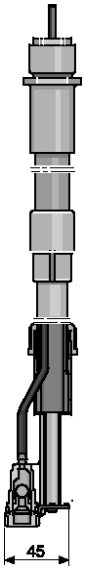

pk_1_069

Variable suction kit without level switch

For ProMinent® solenoid pumps consisting of foot valve, adjustable retaining tube with screw connection and 2 m metering line.

	Length of retaining tube	
Size I	385 - 550 mm	for 35-60 litre container
Size II	660 - 1040 mm	for 100-500 litre container
Size III	1200 - 1350 mm	for 1000 litre container

PPE

Material, retaining tube and foot valve	PP
Seal material	EPDM
Hose Material	PE

Material	Hose o Ø x i Ø mm	For container	fig.	Order no.
PP I	6 x 4	35, 60 l	pk_1_069	790333
PP I	8 x 5	35, 60 l	pk_1_069	790334
PP I	12 x 9	35, 60 l	pk_1_069	790335
PP II	6 x 4	100, 140, 250, 500 l	pk_1_069	790336
PP II	8 x 5	100, 140, 250, 500 l	pk_1_069	790337
PP II	12 x 9	100, 140, 250, 500 l	pk_1_069	790338
PP III	6 x 4	1000 l	pk_1_069	790453
PP III	8 x 5	1000 l	pk_1_069	790454
PP III	12 x 9	1000 l	pk_1_069	790455

PCB

Material, retaining tube and foot valve	PVC
Seal material	FPM
Hose Material	soft PVC

Material	Hose o Ø x i Ø mm	For container	fig.	Order no.
PVC I	6 x 4	35, 60 l	pk_1_069	790327
PVC I	8 x 5	35, 60 l	pk_1_069	790328
PVC I	12 x 9	35, 60 l	pk_1_069	790329
PVC II	6 x 4	100, 140, 250, 500 l	pk_1_069	790330
PVC II	8 x 5	100, 140, 250, 500 l	pk_1_069	790331
PVC II	12 x 9	100, 140, 250, 500 l	pk_1_069	790332
PVC III	6 x 4	1000 l	pk_1_069	790450
PVC III	8 x 5	1000 l	pk_1_069	790451
PVC III	12 x 9	1000 l	pk_1_069	790452

See Page → 2-34 for suction kits with larger nominal diameters

1.8 Mechanical-Hydraulic Accessories

1.8.10 Suction Lances, Suction Assembly With Single Stage Float Switch

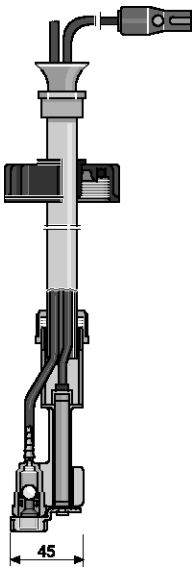

pk_1_072

Variable suction lance with one-stage level switch and flat connector

680 mm for connection to 5-60 litre one way tank, consists of PP foot valve, support pipe and float switch with flat connector, height adjustable Ø 50 screw cap and 2 m PE suction hose. For D_4a dosing pump ranges.

Switching mode: 1 x N/O for low liquid levels

PPE

Material, retaining tube and foot valve	PP
Seal material	EPDM
Hose Material	PE

Material	Hose o Ø x i Ø mm		fig.	Order no.
PP	6 x 4	PP for Ø 50 tank opening, suction hose	pk_1_072	790378
PP	8 x 5	PP for Ø 50 tank opening, suction hose	pk_1_072	790379
PP	12 x 9	PP for Ø 50 tank opening, suction hose	pk_1_072	790380

PCB

Material, retaining tube and foot valve	PVC
Seal material	FPM
Hose Material	soft PVC

Material	Hose o Ø x i Ø mm		fig.	Order no.
PVC	6 x 4	PVC for Ø 50 tank opening, suction hose	pk_1_072	790375
PVC	8 x 5	PVC for Ø 50 tank opening, suction hose	pk_1_072	790376
PVC	12 x 9	PVC for Ø 50 tank opening, suction hose	pk_1_072	790377

Screw cap


pk_1_066

For tanks with opening Ø 44, customers need to order the Ø 44 screw cap as a spare part to replace Ø 50 screw cap.

	Order no.
Ø 44 screw cap	811626

1.8 Mechanical-Hydraulic Accessories

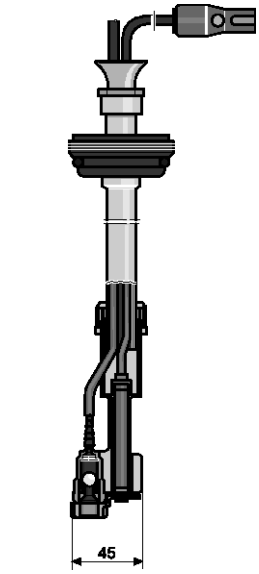

pk_1_071

PP Adjustable suction lance for 200 litre drum with single stage float switch

1000 mm for connection to 200 litre one way tank, consists of PP foot valve, support pipe and float switch with flat connector, height adjustable screw cap and 3 m PE suction hose. For D_4a dosing pump ranges.

Switching mode: 1 x N/C for low liquid levels

PPE

Material, retaining tube and foot valve	PP
Seal material	EPDM
Hose Material	PE

Material	Hose o Ø x i Ø mm		fig.	Order no.
PP	6 x 4	PP for tank opening 2" DIN S 70 x 6, suction hose	pk_1_071	790384
PP	8 x 5	PP for tank opening 2" DIN S 70 x 6, suction hose	pk_1_071	790385
PP	12 x 9	PP for tank opening 2" DIN S 70 x 6, suction hose	pk_1_071	790386

PCB

Material, retaining tube and foot valve	PVC
Seal material	FPM
Hose Material	soft PVC

Material	Hose o Ø x i Ø mm		fig.	Order no.
PVC	6 x 4	PVC for tank opening 2" DIN S 70 x 6, suction hose	pk_1_071	790381
PVC	8 x 5	PVC for tank opening 2" DIN S 70 x 6, suction hose	pk_1_071	790382
PVC	12 x 9	PVC for tank opening 2" DIN S 70 x 6, suction hose	pk_1_071	790383

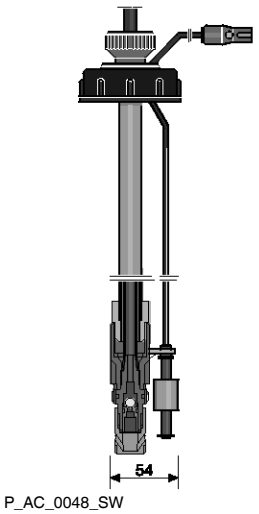

P_AC_0048_SW

Suction lance for 60 litre canister, fixed length, gas-tight, with one-stage level switch

560 mm for connection to 60 litre tank with tank height 600 mm and Ø 55 tank opening. Designed with de-aerating/aerating valve. Consisting of foot valve and retaining tube, level switch with flat connector, 2 m intake hose. For D_4a dosing pump ranges.

Switching mode: 1 x N/O for low liquid levels

PPE

Material, retaining tube and foot valve	PP
Seal material	EPDM
Hose Material	PE

Material	Hose o Ø x i Ø mm		fig.	Order no.
PP	6 x 4	PP for Ø 55 with suction hose	pk_1_074	801954
PP	8 x 5	PP for Ø 55 with suction hose	pk_1_074	801955
PP	12 x 9	PP for Ø 55 with suction hose	pk_1_074	801956

1.8 Mechanical-Hydraulic Accessories

PCB

Material, retaining tube and foot valve	PVC
Seal material	FPM
Hose Material	soft PVC

Material	Hose o Ø x i Ø mm		fig.	Order no.
PVC	6 x 4	PVC for Ø 55 with suction hose	pk_1_074	801853*
PVC	8 x 5	PVC for Ø 55 with suction hose	pk_1_074	801854*
PVC	12 x 9	PVC for Ø 55 with suction hose	pk_1_074	801855*

*** Caution:** The product contains adhesive joints with Tangit. Please note the resistance of the Tangit adhesive.

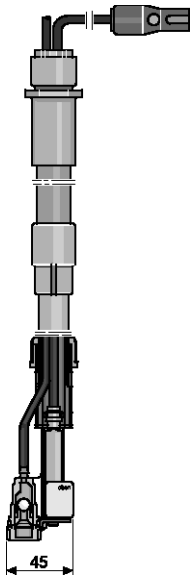

pk_1_073

Variable suction kit with one-stage level switch and flat connector

Consisting of foot valve, retaining tube and screw connection, one-stage level switch with flat connector, intake hose. For D_4a dosing pump ranges.

Switching mode: 1 x N/O for low liquid levels

	Adjustable length			
Size I	385 - 550 mm	for tank	35 to	60 litre
Size II	660 - 1040 mm	for tank	100 to	500 litre
Size III	1200 - 1350 mm	for tank		1000 litre

PPE

Material, retaining tube and foot valve	PP
Seal material	EPDM
Hose Material	PE

Material	Hose o Ø x i Ø mm	For container	fig.	Order no.
PP I	6 x 4	35, 60 l	pk_1_073	790353
PP I	8 x 5	35, 60 l	pk_1_073	790354
PP I	12 x 9	35, 60 l	pk_1_073	790355
PP II	6 x 4	100, 140, 250, 500 l	pk_1_073	790356
PP II	8 x 5	100, 140, 250, 500 l	pk_1_073	790357
PP II	12 x 9	100, 140, 250, 500 l	pk_1_073	790358
PP III	6 x 4	1000 l	pk_1_073	790459
PP III	8 x 5	1000 l	pk_1_073	790460
PP III	12 x 9	1000 l	pk_1_073	790461

PCB

Material, retaining tube and foot valve	PVC
Seal material	FPM
Hose Material	soft PVC

Material	Hose o Ø x i Ø mm	For container	fig.	Order no.
PVC I	6 x 4	35, 60 l	pk_1_073	790347
PVC I	8 x 5	35, 60 l	pk_1_073	790348
PVC I	12 x 9	35, 60 l	pk_1_073	790349
PVC II	6 x 4	100, 140, 250, 500 l	pk_1_073	790350
PVC II	8 x 5	100, 140, 250, 500 l	pk_1_073	790351
PVC II	12 x 9	100, 140, 250, 500 l	pk_1_073	790352
PVC III	6 x 4	1000 l	pk_1_073	790456
PVC III	8 x 5	1000 l	pk_1_073	790457
PVC III	12 x 9	1000 l	pk_1_073	790458

1.8 Mechanical-Hydraulic Accessories

1.8.11 Suction Lances, Suction Assembly With Two Stage Float Switch

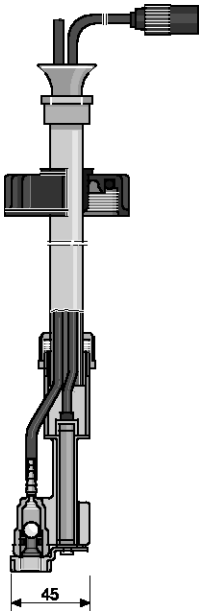

pk_1_075

Variable suction lance with two-stage level switch

680 mm long for connection to disposable container of 5 - 60 litres, consisting of foot valve, level switch with round plug and retaining tube, vertically adjustable screw cap and 2 m intake hose.

For Beta® and gamma metering pump ranges.

Switching mode: 2 x N/C for low liquid levels

PPE

Material, retaining tube and foot valve	PP
Seal material	EPDM
Hose Material	PE

Material	Hose o Ø x i Ø mm		fig.	Order no.
PP	6 x 4	PP for Ø 50 tank opening, suction hose	pk_1_075	802277
PP	8 x 5	PP for Ø 50 tank opening, suction hose	pk_1_075	802278
PP	12 x 9	PP for Ø 50 tank opening, suction hose	pk_1_075	790372

PCB

Material, retaining tube and foot valve	PVC
Seal material	FPM
Hose Material	soft PVC

Material	Hose o Ø x i Ø mm		fig.	Order no.
PVC	6 x 4	PVC for Ø 50 tank opening, suction hose	pk_1_075	802077
PVC	8 x 5	PVC for Ø 50 tank opening, suction hose	pk_1_075	802078
PVC	12 x 9	PVC for Ø 50 tank opening, suction hose	pk_1_075	790371

Screw cap

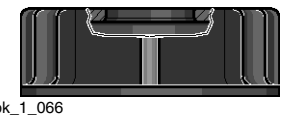
pk_1_066

For tanks with opening Ø 44, customers need to order the Ø 44 screw cap as a spare part to replace Ø 50 screw cap.

	Order no.
Ø 44 screw cap	811626

1.8 Mechanical-Hydraulic Accessories

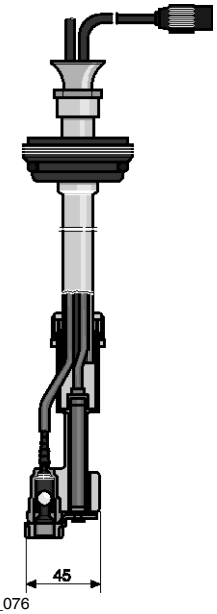

pk_1_076

Variable suction lance for 200 litre drum with two-stage level switch

1000 mm long for connection to 200 litre drum, with foot valve, level switch with round plug and retaining tube, vertically adjustable screw plug and 3 m intake hose. For Beta® and gamma metering pump ranges.

Switching mode: 2 x N/C for low liquid levels

PPE

Material, retaining tube and foot valve	PP
Seal material	EPDM
Hose Material	PE

Material	Hose o Ø x i Ø mm		fig.	Order no.
PP	6 x 4	PP for tank opening 2" DIN S 70 x 6, suction hose	pk_1_076	802279
PP	8 x 5	PP for tank opening 2" DIN S 70 x 6, suction hose	pk_1_076	802280
PP	12 x 9	PP for tank opening 2" DIN S 70 x 6, suction hose	pk_1_076	790374

PCB

Material, retaining tube and foot valve	PVC
Seal material	FPM
Hose Material	soft PVC

Material	Hose o Ø x i Ø mm		fig.	Order no.
PVC	6 x 4	PVC for tank opening 2" DIN S 70 x 6, suction hose	pk_1_076	802079
PVC	8 x 5	PVC for tank opening 2" DIN S 70 x 6, suction hose	pk_1_076	802080
PVC	12 x 9	PVC for tank opening 2" DIN S 70 x 6, suction hose	pk_1_076	790373

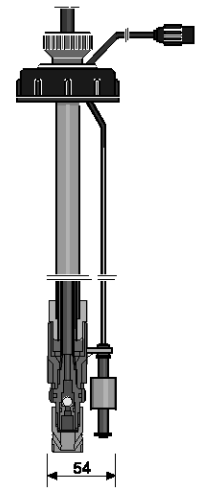

P_AC_0052_SW

Suction lance for 60 litre canister, fixed length, gas-tight, with two-stage level switch

560 mm long for connection to 60 litre canister, height 600 mm and 55 mm Ø opening. With breather valve. Consisting of foot valve and retaining tube, level switch with round plug and 2 m intake hose. For Beta® and gamma metering pump ranges.

Switching mode: 2 x N/C for low liquid levels

PPE

Material, retaining tube and foot valve	PP
Seal material	EPDM
Hose Material	PE

Material	Hose o Ø x i Ø mm		fig.	Order no.
PP	6 x 4	PP for Ø 55 with suction hose	pk_1_078	802285
PP	8 x 5	PP for Ø 55 with suction hose	pk_1_078	802286
PP	12 x 9	PP for Ø 55 with suction hose	pk_1_078	802287

1.8 Mechanical-Hydraulic Accessories

PCB

Material, retaining tube and foot valve	PVC
Seal material	FPM
Hose Material	soft PVC

Material	Hose o Ø x i Ø mm		fig.	Order no.
PVC	6 x 4	PVC for Ø 55 with suction hose	pk_1_078	802081*
PVC	8 x 5	PVC for Ø 55 with suction hose	pk_1_078	802082*
PVC	12 x 9	PVC for Ø 55 with suction hose	pk_1_078	802083*

*** Caution:** The product contains adhesive joints with Tangit. Please note the resistance of the Tangit adhesive.

PVDF Suction Lance

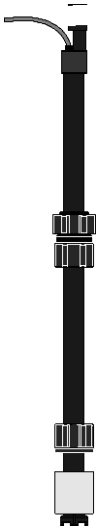

P_AC_0238_SW

Suction lance with a fixed length made of PVDF, with two-stage level switch and round plug, consisting of PVDF support pipe, foot valve and two-stage level switch with round plug. Suction hose PTFE 8 x 6 mm, a matching connector kit is included.

	Length mm	Order no.
PVDF Suction Lance	350	1038304
PVDF Suction Lance	650	1038305

1.8 Mechanical-Hydraulic Accessories

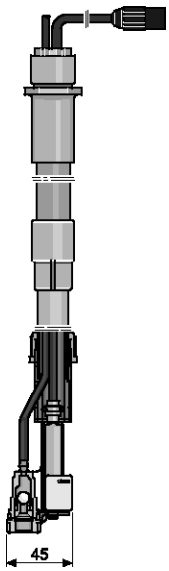

pk_1_077

PP Adjustable suction assembly with two stage float switch and round plug

consisting of foot valve, retaining tube and screw connection, two-stage level switch with 3-pin round plug, metering line.

For Beta® and gamma metering pump ranges.

Switching mode: 2 x N/C for low liquid levels

Adjustable Length

Size I	385 - 550 mm	for tank	35 to	60 litre
Size II	660 - 1040 mm	for tank	100 to	500 litre
Size III	1200 - 1350 mm	for tank		1000 litre

PPE

Material, retaining tube and foot valve	PP
Seal material	EPDM
Hose Material	PE

Material	Hose o Ø x i Ø mm	For container	fig.	Order no.
PP I	6 x 4	35, 60 l	pk_1_077	790365
PP I	8 x 5	35, 60 l	pk_1_077	790366
PP I	12 x 9	35, 60 l	pk_1_077	790367
PP II	6 x 4	100, 140, 250, 500 l	pk_1_077	790368
PP II	8 x 5	100, 140, 250, 500 l	pk_1_077	790369
PP II	12 x 9	100, 140, 250, 500 l	pk_1_077	790370
PP III	6 x 4	1000 l	pk_1_077	790465
PP III	8 x 5	1000 l	pk_1_077	790466
PP III	12 x 9	1000 l	pk_1_077	790467

PCB

Material, retaining tube and foot valve	PVC
Seal material	FPM
Hose Material	soft PVC

Material	Hose o Ø x i Ø mm	For container	fig.	Order no.
PVC I	6 x 4	35, 60 l	pk_1_077	790359
PVC I	8 x 5	35, 60 l	pk_1_077	790360
PVC I	12 x 9	35, 60 l	pk_1_077	790361
PVC II	6 x 4	100, 140, 250, 500 l	pk_1_077	790362
PVC II	8 x 5	100, 140, 250, 500 l	pk_1_077	790363
PVC II	12 x 9	100, 140, 250, 500 l	pk_1_077	790364
PVC III	6 x 4	1000 l	pk_1_077	790462
PVC III	8 x 5	1000 l	pk_1_077	790463
PVC III	12 x 9	1000 l	pk_1_077	790464

1.8 Mechanical-Hydraulic Accessories

1.8.12 Float Switches

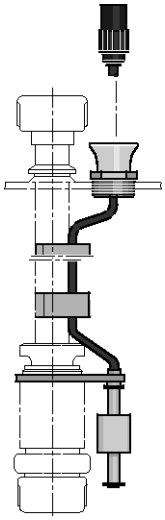

pk_1_079

Level switch kit compl. PVDF two-phase with round plug

The level switch kit can be ordered together with the suction fittings DN 10/DN 15. Connection is made by the customer. For metering pump series Beta® , gamma and gamma/ L.

Switching mode:	for level shortage 2 x NC
Materials:	level switch PVFD
	Float PE expanded
	Cable 3 m, PE

Connection	Type	Order no.
DN 10/15	with 3P round plug	1034879

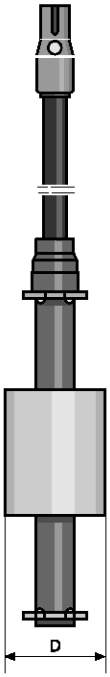

pk_1_080

Single stage float switch

for minimum indication with simultaneous deactivation of the metering pump. With flat coupling for direct connection to ProMinent® metering pump D_4a.

Technical data:

max. switching voltage 100 V,

switching current 0.5 A,

switching capacity 5 W/5 VA,

temperature range -10°C to 65°C, IP rating IP 67.

Switching mode: for level shortage 1 x NO.

Material:

body PVDF, float PE expanded, cable PE.

	Lead length	Order no.
PVDF/PE with flat coupling	2 m	1031588
PVDF/PE with flat coupling	5 m	1031590

Material:

body PVDF, float PVDF, cable PE.

	Lead length	Order no.
PVDF with flat connector	2 m	1034695
PVDF with flat connector	5 m	1034696

1.8 Mechanical-Hydraulic Accessories

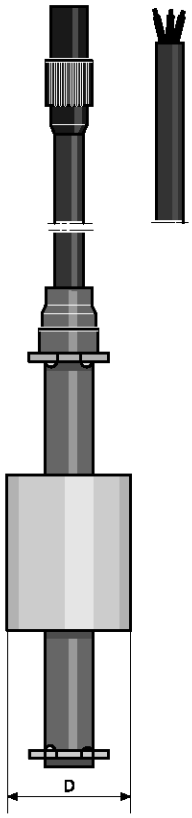

pk_1_081

Two stage float switch

for level monitoring in the storage tank, two-phase with pre-alarm alarm signalling and deactivation of the metering pump after a further level decrease of 30 mm.

With 3P round plug for direct connection to Beta® and gamma.

With 3 litz wires, e.g. in connection with relay control, order no. 914768.

Technical data:

max. switching voltage 100V, switching current 0.5 A, switching capacity 5 W/5 VA,

temperature range -10°C to 65°C, IP rating IP 67.

Switching mode: for level shortage 2 x NC.

Material:

body PVDF, float PE expanded, cable PE.

	Lead length	Order no.
PVDF/PE with 3P round plug	2 m	1031604
PVDF/PE with 3P round plug	5 m	1031606
PVDF/PE with 3 litz wires	2 m	1031607
PVDF/PE with 3 litz wires	5 m	1031609

Material:

body PVDF, float PVDF, cable PE.

	Lead length	Order no.
PVDF with 3-pin round plug	2 m	1034697
PVDF with 3-pin round plug	5 m	1034698
PVDF with 3 leads	2 m	1034699
PVDF with 3 leads	5 m	1034700

Cable assignment on 3-wire cable:

Colour	Function
black	Ground
blue	Minimum pre-warning
brown	Minimum end switch-off

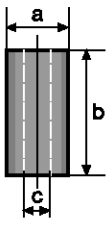

pk_1_082

Ceramic weight for vertical fixing of float switch

	Ø A mm	B mm	Ø C mm	Weight g	Type	Order no.
Size 1	25	50	10	60	For round and latch plug	1019244
Size 2	39	32	*	65	For round plug/flat connector	404004
Size 3	40	50	24	70	For round plug/flat connector	1030189

* Slot 13 x 27 mm

With the two stage float switch with round plug, the weight is pushed up when float is attached.

1.8 Mechanical-Hydraulic Accessories

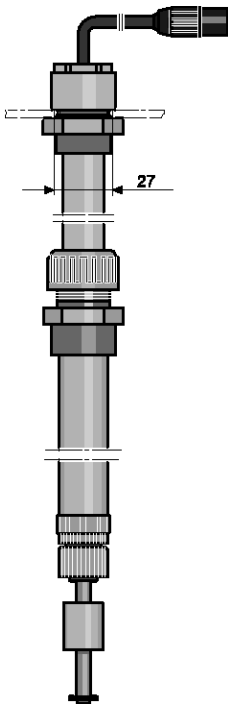

pk_1_084

Level switch PVDF/PE with retaining pipe hard PVC

For use in chemicals which would attack the float switch PE cable and/or for stable mounting in conjunction with electronic stirrers, FPM seal.

Adjustable Length

Size I	350 - 550 mm	for 35 and 60 litre tank
Size II	660 - 1160 mm	for 100 to1000 litre tank

Size	Float switch	Order no.
Size I	- two-stage with round plug	802010
Size II	- two-stage with round plug	802011
Size I	- one-stage with flat connector	801727
Size II	- one-stage with flat connector	801728

Switching mode:

2-stage: 2 x N/C for low liquid levels

1-stage: 1 x N/O for low liquid levels

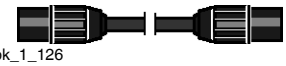

pk_1_126

Extension lead, 3-core

	fig.	Order no.
For 2-stage float switch with round plug and coupler, length, 3 m	pk_1_126	1005559

1.8 Mechanical-Hydraulic Accessories

1.8.13 Flow Meter, Dosing Monitor, Signal Cable

Ultra-sound Flow Meter DulcoFlow®

for the measurement of pulsing flows ranging from 0.1 to 80 l/h. All parts that come into contact with the feed chemical are made from PVDF, ensuring that even aggressive feed chemicals can be measured without a problem. The device is installed approximately 30 cm downstream of the pump in the metering line. Interfering influences, such as air bubbles, are detected and transmitted to the analysis unit as an error message. The use of the delta is only fast with metering stroke versions.

Alongside the recording and measurement of flows, the flow meter DulcoFlow® can also be used to monitor individual metering strokes, if "Contact output" is selected for signal output in the identity code. In this case, the device is calibrated to the lifting volume set on the pump. A lower and an upper limit can be entered and if the figure falls below or exceeds these limits, no feedback is transmitted to the pump. As a result, this generates an error message. Connection to the pump is via the input for the "Flow Control" dosing monitor.

The device is designed to be fitted on the wall.

- The cumulative volume can be calculated in litres or gallons
- Direct display of the flow and number of strokes recorded
- Display of the lifting volume and the percentage deviation from the setpoint
- 2 LEDs for stroke feedback and operating status
- Analog output or frequency output for flow volume
- Contact output for direct connection to the metering pump (single stroke monitoring)

Technical Data

Type	Type 05	Type 08
Measuring tube	PVDF	PVDF
Max. operating pressure	16 bar	16 bar
Smallest measurable lifting volume	ca. 0.03 cm^3/stroke pulsierend	ca. 0.03 cm^3/stroke pulsierend
Contact output with individual stroke detection	open collector, 1 contact per stroke	open collector, 1 contact per stroke
Frequency output	open collector, up to 10 kHz at maximum flow (parametrisable)	open collector, up to 10 kHz at maximum flow (parametrisable)
Analog output	parametrisable, max. load 400 Ω	parametrisable, max. load 400 Ω
for series	beta, gala: 1000 - 0413/0713 Delta: 1608 - 1612	beta, gala: 0220/0420 - 0232 Delta: 1020 - 0280

1.8 Mechanical-Hydraulic Accessories

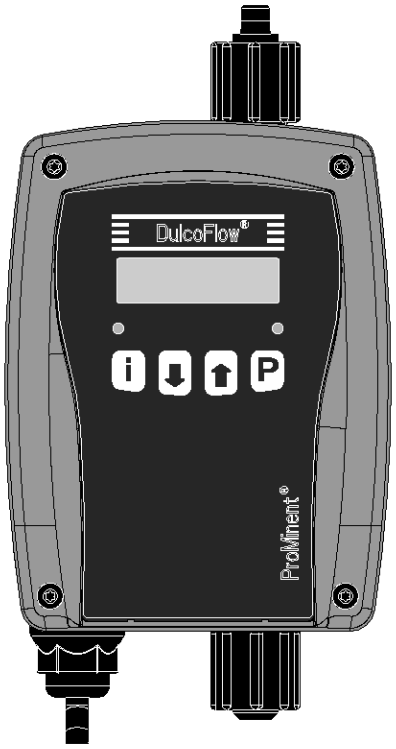

P_DFI_0002_SW3

Identity Code Ordering System for Ultrasound Flow Meter DFMa

DFMa	Type (for pump series)							
	05	beta, gamma/ L 1000 - 0413/0716, delta 1608 - 1612						
	08	beta, gamma/ L 0220/0420 - 0232, delta 1020 - 0280						
		Sealant material						
		E	EPDM					
		V	FPM					
		T	PTFE					
			Hydraulic connection					
			1	6/4 mm				
			2	8/5 mm				
			3	12/9 mm				
				Electrical connection				
				A	2 m European			
				B	2 m Swiss			
				C	2 m Australian			
				D	2 m USA			
					Signal output			
					0	No output		
					1	Current output		
					2	Contact output		
						Version		
						0	With ProMinent® logo	
						2	Without ProMinent® logo	
							Accessories	
							0	Without accessories

1.8 Mechanical-Hydraulic Accessories

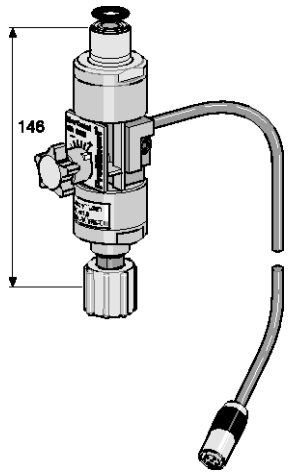

pk_1_086_2

Flow Control adjustable flow monitor

Suitable for gamma/ L series in material versions PP, PC, NP and TT. Supplied with connection cable for assembly directly to liquid end.

Monitors individual strokes according to the float and orifice principle. The partial quantity of chemical flowing past the float is adapted to the preset stoke volume via the adjusting screw so that an alarm is actuated if the flow falls below 20 %. The user can select the number of incomplete strokes permitted (between 1 and 127) in accordance with the actual process requirements.

Materials

Housing:	PVDF
Float:	PTFE-coated
Seals:	FPM/EPDM

Flow Control for Pressure Side Installation

Flow Control	For pump type	Material	Order no.
Size I	1601, 1602	PVDF/EPDM	1009229
	1601, 1602	PVDF/FPM	1009335
Size II	1005, 1605, 0708, 1008, 0413, 0713, 0220, 0420, 0232	PVDF/EPDM	1009336
	1005, 1605, 0708, 1008, 0413, 0713, 0220, 0420, 0232	PVDF/FPM	1009338

Pay attention to the minimum values for the stroke length.

Pump type	Medium operating pressure	Stroke length (scale division)	Max. permissible operating pressure	Stroke length (scale division)
1601	8 bar	> 30 %	16 bar	> 40 %
1602	8 bar	> 30 %	16 bar	> 40 %
1005	5 bar	> 30 %	10 bar	> 50 %
0708	4 bar	> 30 %	7 bar	> 40 %
1605	8 bar	> 30 %	16 bar	> 50 %
1008	5 bar	> 30 %	10 bar	> 40 %
0413	2 bar	> 30 %	4 bar	> 30 %
0713	4 bar	> 30 %	7 bar	> 30 %
0220	1 bar	> 30 %	2 bar	> 30 %
0420	2 bar	> 30 %	4 bar	> 30 %
0232	1 bar	> 30 %	2 bar	> 30 %

Flow Control for Suction Side Installation

Suitable for delta® series with slow discharge stroke version. Individual strokes are detected on the suction side where the flow velocity is sufficiently high. With water as the medium, the minimum stroke length is 30%, normal suction stroke version, HV1 or HV2.

Flow Control	For pump type	Material	Order no.
Size II	1608-0730	PVDF/EPDM	1036407
	1608-0730	PVDF/FPM	1036409
Size III	0450-0280	PVDF/EPDM	1036439
	0450-0280	PVDF/FPM	1036440

1.8 Mechanical-Hydraulic Accessories



pk_1_085

Universal control cable

For control of metering pump via contact - external pacing, standard signal - analogue control and for voltage free ON/OFF - switch function.

For Beta®, gamma, mikro g/ 5 and Vario with 5-pin plastic round plug and 5-core open ended cable.

	Lead length	Order no.
5 core universal cable, 5 pin round plug	2 m	1001300
5 core universal cable, 5 pin round plug	5 m	1001301
5 core universal cable, 5 pin round plug	10 m	1001302

External control cable

For external control of Beta®, gamma, mikro g/ 5 and Vario via contacts only. With 5 pin round plug, internally bridged, and 2-core lead with open end.

	Lead length	Order no.
2 core external cable, 5 pin round plug	2 m	707702
2 core external cable, 5 pin round plug	5 m	707703
2 core external cable, 5 pin round plug	10 m	707707

PROFIBUS® adapter, enclosure rating IP 65



pk_1_055



pk_1_009

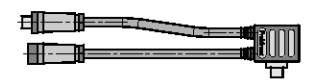

P_AC_0208_SW

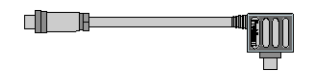

P_AC_0209_SW

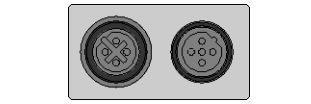

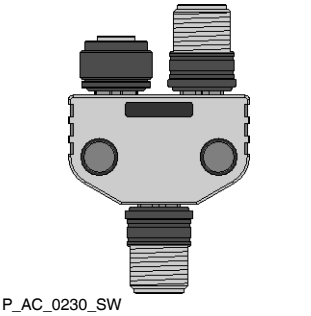

P_AC_0230_SW

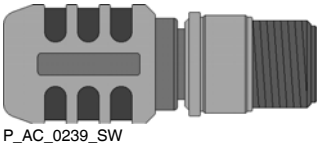

P_AC_0239_SW

		fig.	Order no.
Y-adapter 2 x M12 x 1 male/female 9-pin, sub D plug	9-pin, sub D plug	pk_1_055	1005838
Adapter 1 x M12 x 1 male 9-pin, sub D plug	9-pin, sub D plug	pk_1_009	1005839
Y-adapter 2 x M12 x 1 male/female	M12 x 1 male	P_AC_0208_SW	1024216
Adapter 1 x M12 x 1 male	M12 x 1 male	P_AC_0209_SW	1024219
PROFIBUS® Y-adapter	M 12 x 1	P_AC_0230_SW	1036621
PROFIBUS® termination resistance, plug-in	M 12 x 1	P_AC_0230_SW	1036622

USB adaptor

To connect a laptop to dosing pumps in the gamma and Sigma series.

The USB adaptor can be used to transfer timer programmes created using ProTime software to the pump. You will find the ProTime software on our home page.

	Order no.
USB adaptor	1021544

1.8 Mechanical-Hydraulic Accessories

1.8.14 Safety Plant

Diaphragm failure detector

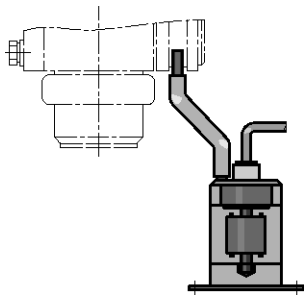

pk_1_087

Trips alarm and switches off metering pump when diaphragm is ruptured. Consists of PVC/PE float switch, Acrylic housing, connector nozzles and connecting hose. Voltage free making contact, max. contact current 60 V AC, 300 mA, 18 W.

Fits all types, from Beta® and gamma.

Retrofitting possible

	Order no.
Diaphragm failure detector	803640

Siren

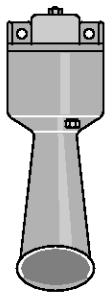

pk_1_088

HUW 55, 230 V, 50-60 Hz, 165 x 60 x 65, 85 phon, indoor

(e.g. in connection with fault signalling relay)

	Order no.
Horn HUW 55	705002

Indicator lamp

Red for wall mounting 230 V, 50-60 Hz(e.g. in connection with fault signalling relay, relay control or clock generator relay)

	Order no.
Indicator lamp, red	914780

1.8 Mechanical-Hydraulic Accessories

1.8.15 Connection Kits

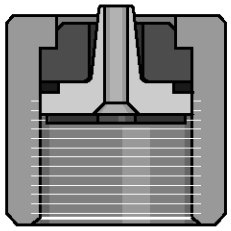

pk_1_089

Connector set for attachment of variously sized hoses to suction and discharge connectors on alpha, Beta®, gamma, mikro g/ 5, CONCEPT, Pneumados liquid ends and accessories. Consist of hose sleeves, clamping rings, union nuts and seals for one/two connectors.

Single Connector Set

Material		oØ x iØ mm	Order no.
PP/EPDM (PPE)	for hose	6 x 4	817160
PP/EPDM (PPE)	for hose	8 x 5	817161
PP/EPDM (PPE)	for hose	12 x 9	817162
PP/EPDM (PPE)	for hose	10 x 4	1002587
PP/EPDM (PPE)	for hose	12 x 6	817163
PP/FPM (PPB)	for hose	6 x 4	817173
PP/FPM (PPB)	for hose	8 x 5	817174
PP/FPM (PPB)	for hose	12 x 9	817175
PP/FPM (PPB)	for hose	10 x 4	1002588
PP/FPM (PPB)	for hose	12 x 6	817176
PVC/EPDM (PCE)	for hose	6 x 4	791161
PVC/EPDM (PCE)	for hose	8 x 5	792058
PVC/EPDM (PCE)	for hose	12 x 9	790577
PVC/EPDM (PCE)	for hose	10 x 4	1002590
PVC/EPDM (PCE)	for hose	12 x 6	792062
PVC/FPM (PCB)	for hose	6 x 4	817065
PVC/FPM (PCB)	for hose	8 x 5	817066
PVC/FPM (PCB)	for hose	12 x 9	817067
PVC/FPM (PCB)	for hose	10 x 4	1002589
PVC/FPM (PCB)	for hose	12 x 6	817068
PVDF (PVT)	for hose	6 x 3	1024583
PVDF (PVT)	for hose	6 x 4	1024619
PVDF (PVT)	for hose	8 x 4	1033148
PVDF (PVT)	for hose	8 x 5	1024620
PVDF (PVT)	for hose	12 x 9	1024618
PVDF (PVT)	for hose	10 x 4	1024585
PVDF (PVT)	for hose	12 x 6	1024617
PTFE (TTT)	for hose	6 x 4	817205
PTFE (TTT)	for hose	8 x 5	817206
PTFE (TTT)	for hose	12 x 9	817207
PTFE (TTT)	for hose	12 x 6	817208

Double Connector Set

Material		oØ x iØ mm	Order no.
PP/EPDM (PPE)	for hose	6 x 4	817150
PP/EPDM (PPE)	for hose	8 x 5	817153
PP/EPDM (PPE)	for hose	12 x 9	817151
PP/EPDM (PPE)	for hose	12 x 6	817152
PP/FPM (PPB)	for hose	6 x 4	817166
PP/FPM (PPB)	for hose	8 x 5	817167
PP/FPM (PPB)	for hose	12 x 9	817168
PP/FPM (PPB)	for hose	12 x 6	817169
PVC/EPDM (PCE)	for hose	6 x 4	817060
PVC/EPDM (PCE)	for hose	8 x 5	817048
PVC/EPDM (PCE)	for hose	12 x 9	817049
PVC/EPDM (PCE)	for hose	12 x 6	791040

1.8 Mechanical-Hydraulic Accessories

Material		oØ x iØ mm	Order no.
PVC/FPM (PCB)	for hose	6 x 4	817050
PVC/FPM (PCB)	for hose	8 x 5	817053
PVC/FPM (PCB)	for hose	12 x 9	817051
PVC/FPM (PCB)	for hose	12 x 6	817052
PVDF (PVT)	for hose	6 x 4	1023246
PVDF (PVT)	for hose	8 x 5	1023247
PVDF (PVT)	for hose	12 x 9	1023248
PVDF (PVT)	for hose	12 x 6	1024586
PTFE (TTT)	for hose	6 x 4	817201
PTFE (TTT)	for hose	8 x 5	817204
PTFE (TTT)	for hose	12 x 9	817202
PTFE (TTT)	for hose	12 x 6	817203

Stainless steel support insert 1.4571

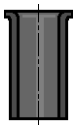

pk_1_090

For connection of PE or PTFE pipe to stainless steel connectors using Swagelock and Serto systems.

	oØ x iØ mm	Order no.
for hose	6 x 4	359365
for hose	8 x 5	359366
for hose	12 x 9	359368
for hose	8 x 6	359362
for hose	12 x 10	359363

1.8.16 Wall Brackets for Metering Pumps

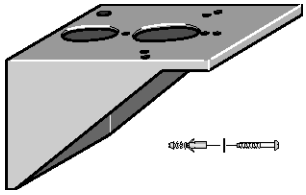

pk_1_092

PPE Wall Mounting Bracket

With fixtures, to hold one metering pump, size Beta®/ 4, Beta®/ 5, gamma/ L, G/ 4, G/ 5, EXtronic® and alpha.

The Beta®/ 4, gamma/ L, and G/ 4 can be mounted either parallel to the wall or at an angle.

Dimensions L x W x H: 208 x 120 x 140 mm

Material Glass fibre reinforced plastic PPE

	fig.	Order no.
Sizes BT4, BT5, gamma/ L, G/ 4, G/ 5, CONCEPT, D_4a	pk_1_092	810164

Adapter plate PP

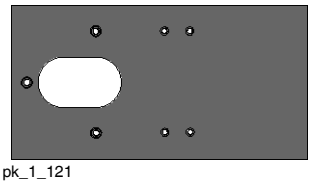

pk_1_121

With fixtures, for vertical wall-mounting of Beta® or gamma pumps with self-degassing liquid ends. Used with PPE wall bracket.

	fig.	Order no.
For BT4, BT5, gamma/ L	pk_1_121	1003030

1.8 Mechanical-Hydraulic Accessories

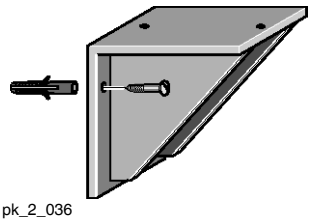

pk_2_036

Wall bracket PP

PP wall mounting, holds pump parallel to the wall, includes fixings.

Dimensions L x W x H: 230 x 220 x 220 mm

	fig.	Order no.
for delta®	pk_2_036	1001906

Aluminium Wall Mounting Bracket

Plastic coated. For parallel pump mounting.

	Order no.
size G/ 5, EXtronic®	810163

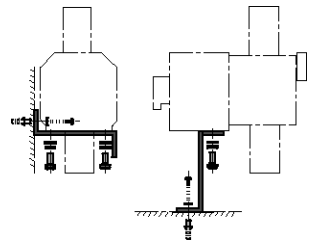

pk_1_095

Wall/Floor bracket for Pneumados

To take Pneumados metering pump. Floor or wall mounted, made in coated aluminium. Includes fittings.

	fig.	Order no.
Dimensions: L x W x H 92 x 80 x 30	pk_1_095	790605

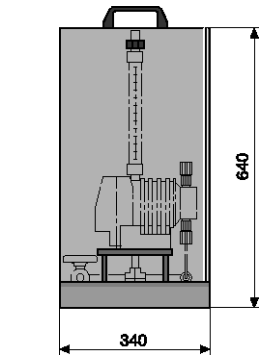

pk_1_093

Portable plastic pump stand

To take metering pumps size: G/ 4 or G/ 5. The pump stand is available in either PP or black PE. It will take a fixed pipe and is fitted with a collecting pan for feed chemicals which may leak as a result of damage to the suction line, or a rupture of the diaphragm.

Supplied with carrying handle. Does not include pump or pipework.

	fig.	Order no.
Light grey PP	pk_1_093	1000180
Black PE	pk_1_093	1000181

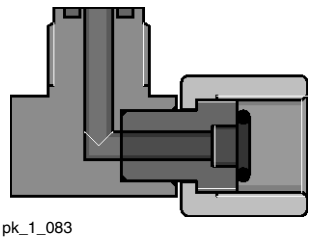

pk_1_083

Right-angled PVC threaded connector

For mounting multi-function valve onto Beta® or gamma/ L models, self-degassing liquid end version.

	Material	fig.	Order no.
PCE Version	PVC/EPDM*	pk_1_083	1003472
PCB Version	PVC/FPM*	pk_1_083	1003318

*** Caution:** The product contains adhesive joints with Tangit. Please note the resistance of the Tangit adhesive.

1.8 Mechanical-Hydraulic Accessories

1.8.17 Contact Water Meters For Use In Potable Water, And Accessories

DIN Version contact water meter

PN 10 bar, indicating, type series MNR-K, operating temp. 40 °C,

contact load max. 100 mA, 24 V, NG - nominal size.

Q_{max} = maximum load, Q_d = permanent load

Q_n = nominal load (1/2 Q_d gccording to calibration regulations)

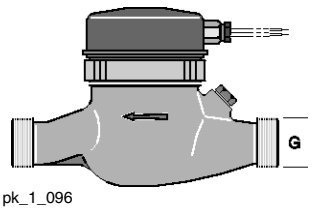

pk_1_096

Q_{max} /Q_d /Q_n	Threaded Connector Width	Connector Thread	Length without Thread	Pulse Interval	Order no.
NG - m^3/h	R DN/mm	G	mm	l	
5/5/2.5	3/4 - DN 20	1	190	0.05	304467
5/5/2.5	3/4 - DN 20	1	190	0.10	304432
5/5/2.5	3/4 - DN 20	1	190	0.25	304455
5/5/2.5	3/4 - DN 20	1	190	0.30	304428
5/5/2.5	3/4 - DN 20	1	190	0.50	304431
5/5/2.5	3/4 - DN 20	1	190	1.00*	304434
5/5/2.5	3/4 - DN 20	1	190	1.50*	304433
5/5/2.5	3/4 - DN 20	1	190	2.50	304458
5/5/2.5	3/4 - DN 20	1	190	10.00	304453
5/5/2.5	3/4 - DN 20	1	190	100.00	304444
12/12/6	1 - DN 25	1 1/4	260	0.25	1004550
12/12/6	1 - DN 25	1 1/4	260	0.50	1004548
12/12/6	1 - DN 25	1 1/4	260	1.00*	1004544
12/12/6	1 - DN 25	1 1/4	260	1.50*	1004549
12/12/6	1 - DN 25	1 1/4	260	2.00*	1004546
12/12/6	1 - DN 25	1 1/4	260	10.00*	1004547
12/12/6	1 - DN 25	1 1/4	260	100.00	1004545
20/20/10	1 1/2 - DN 40	2	300	2.00*	1004551
20/20/10	1 1/2 - DN 40	2	300	3.00	1004552
20/20/10	1 1/2 - DN 40	2	300	4.00	1004553
20/20/10	1 1/2 - DN 40	2	300	10.00	1004554
20/20/10	1 1/2 - DN 40	2	300	100.00	1004555
30/30/15	2 - DN 50	2 1/2	270	3.00	1020551
30/30/15	2 - DN 50	2 1/2	270	4.00*	1020552
30/30/15	DN 50	Flange	270	6.00*	1020553
30/30/15	2 - DN 50	2 1/2	270	10.00	1020550
30/30/15	DN 50	Flange	270	100.00	304450

*Standard storage tank

1.8 Mechanical-Hydraulic Accessories

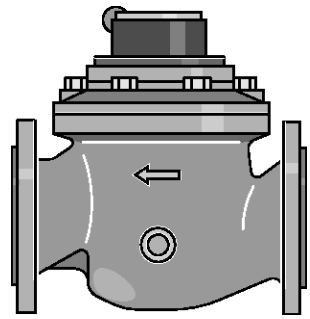

pk_1_097

DIN Version contact water meter

Readable, series WS-K, operating temp. 40 °C, contact load max. 30 mA, 30 V, DIN 2501 flange, PN 16 bar.

Q_{max} = Maximum load

Q_d = Continuous load

Q_n = Nominal load

Q_{max} /Q_d /Q_n	Connector width	Lower working limit	Length	Pulse Interval	Order no.
NG - m^3/h	DN/mm	l/h	mm	l	
110/55/40	DN 80	275	300	10.00*	1004560
110/55/40	DN 80	275	300	25.00	1004558
110/55/40	DN 80	275	300	100.00	1004559
180/90/60	DN 100	300	360	10.00	1004567
180/90/60	DN 100	300	360	25.00*	1004556
180/90/60	DN 100	300	360	50.00	1004557
350/200/150	DN 150	800	500	50.00*	1004568

*Standard storage tank

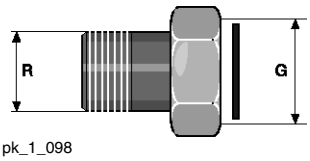

pk_1_098

Union assembly set with seal

For threaded water meter, brass.

		Order no.
R 3/4	G 1	359029
R 1	G 1 1/4	801322
R 1 1/4	G 1 1/2 - (turboDOS®)	359034
R 1 1/2	G 2	359037
R 2	G 2 1/2	359039

Union assembly set with seal

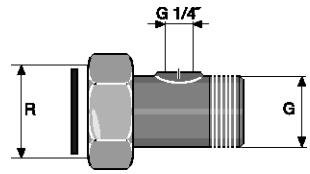

pk_1_099

For threaded water meter with G 1/4 connector for injection valve, brass.

		Order no.
R 3/4	G 1 - 1/4	359030
R 1	G 1 1/4 - 1/4	359032
R 1 1/2	G 2 - 1/4	359038
R 2	G 2 1/2 - 1/4	801321

1.8 Mechanical-Hydraulic Accessories

O-ring loaded injection valve

For use with threaded water meter union.

Fig. pk_1_099 for threaded connector as R 1 - DN 25

Applications when using appropriate metering lines

25 °C - max. operating pressure 16 bar

45 °C - max. operating pressure 9 bar

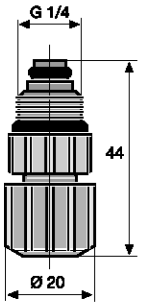

pk_1_043

Connector		Material	oØ x iØ mm	fig.	Order no.
6/4 - G 1/4	Short for hose	PP/FPM	6 x 4	pk_1_043	914754
6/4 - G 1/4	Long for hose	PP/FPM	6 x 4	pk_1_044	741193
6/4 - G 1/4	Short for hose	PVC/FPM	6 x 4	pk_1_043	914558
6/4 - G 1/4	Long for hose	PVC/FPM	6 x 4	pk_1_044	915091

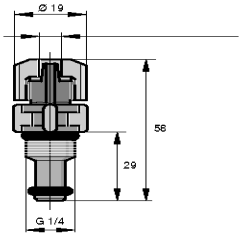

pk_1_044_SW1

1.9 Mechanical/Hydraulic Special Accessories

1.9.1 Spare Parts Kits

Spare parts kits for ProMinent® metering pumps which have been modified or that are no longer available.

For spare parts kits for Beta® a, see Spare Parts Kits for gamma/ L → 1-20

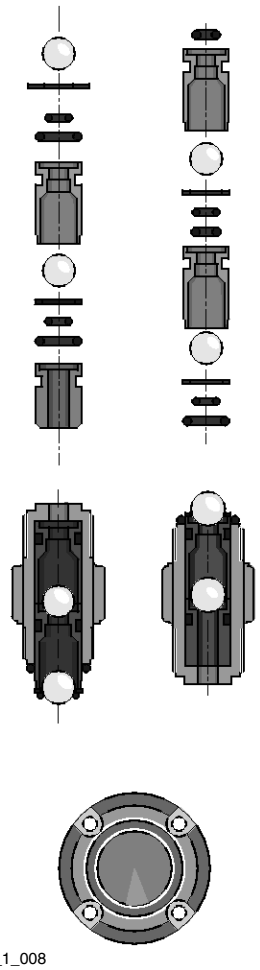

pk_1_008

Spare parts kits gamma/ 4 and gamma/ 5

Supplied for PP and NP versions:

1 pump diaphragm
1 suction valve compl.
1 discharge valve compl.
2 valve balls
1 seal set
1 connector set

Supplied for NS3 and PS3 versions:

1 pump diaphragm
1 suction valve compl.
1 connector parts set
1 discharge valve compl.
1 bleed valve set
1 connector set

Supplied for TT-PTFE versions:

1 pump diaphragm
1 suction valve compl.
1 discharge valve compl.
2 valve balls
2 ball seat discs
1 seal set
1 connector set

Supplied for SS stainless steel versions:

1 pump diaphragm
4 valve balls
4 ball seat discs
1 seal set
1 connector set

Spare parts kits gamma/ 4

Pump type	Material	Order no. version a	Order no. version b
gamma/ 4 1000, 1001	NP1	910715	–
	PP1	910716	–
	TT	910776	910776
	SS/SK	910777	910777
	PP3	–	740356
	NP2	–	740355
	NP3	–	740354
	PP1	–	740357
gamma/ 4 1601, 1602	NP1	910719	–
	PP1	910720	–
	NS3/PS3	792033	792033
	TT	910778	910778
	SS/SK	910779	910779
	PP3	–	740360

1.9 Mechanical/Hydraulic Special Accessories

Pump type	Material	Order no. version a	Order no. version b
	NP2	–	740359
	NP3	–	740358
	PP1	–	740361
gamma/ 4 1201, 1203	NP1	910723	–
	PP1	910724	–
	NS3/PS3	792034	792034
	TT	910780	910780
	SS/SK	910781	910781
	PP3	–	740364
	NP2	–	740363
	NP3	–	740362
	PP1	–	740380
gamma/ 4 0803, 0806	NP1	910727	–
	PP1	910728	–
	NS3/PS3	792035	792035
	TT	910782	910782
	SS	910783	910783
	PP3	–	740383
	NP2	–	740382
	NP3	–	740381
	PP1	–	740384
gamma/ 4 1002, 1003	NP1	910731	–
	PP1	910732	–
	NS3/PS3	792036	792036
	TT	910784	910784
	SS	910785	910785
	HV/PP 4 (Type 1002)	910743	910743
	PP3	–	740387
	NP2	–	740386
	NP3	–	740385
	PP1	–	740388
gamma/ 4 0308, 0313	NP1	910735	–
	PP1	910736	–
	TT	910786	910786
	SS	910787	910787
	PP2	–	740480
	NP2	–	740391
	PP1	–	740497
	NP1	–	740498
gamma/ 4 0215, 0223	TT	910788	910788
	SS	910789	910789
	PP1	910740	–
	NP1	910739	–
	PP2	–	740481
	NP2	–	740392
	PP1	–	740499
	NP1	–	740500

Spare parts kits gamma/ 5

Pump type	Material	Order no. version a	Order no. version b
gamma/ 5 1602	SS	910947	910947
	NP1	910945	–
	NP2	–	740386
	NP3	–	740385
gamma/ 5 1605	SS	910951	910951
	NP1	910949	–
	NP2	–	740391
	NP1	–	740498

1.9 Mechanical/Hydraulic Special Accessories

Pump type	Material	Order no. version a	Order no. version b
	NP1	910953	–
gamma/ 5 1006	HV/PP4 (Type 1006)	910939	910939
	SS	910959	910959
	TT	910957	910957
	PP1	910955	–
	NP1	910953	–
	PP2	–	740480
	NP2	–	740391
	PP1	–	740497
	NP1	–	740498
gamma/ 5 1310	SS	910963	910963
	HV/PP4 (Type 1310)	910941	910941
	NP1	910961	–
	NP2	–	740397
	NP1	–	740505
gamma/ 5 0613	PP2	–	740506
	SS	910971	910971
	TT	910969	910969
	PP1	910967	–
	NP1	910965	–
	NP2	–	740397
	PP1	910967	740504
	NP1	–	740505
gamma/ 5 0813	TT	910977	910977
	SS	910979	910979
	HV/PP4 (Type 0814)	910943	910943
	PP1	910975	–
	NP1	910973	–
	PP2	–	740503
	NP2	–	740393
	PP1	–	740501
	NP1	–	740502
gamma/ 5 0417	TT	910985	910985
	SS	910987	910987
	PP1	910983	–
	NP1	910981	–
	PP2	–	740503
	NP2	–	740393
	PP1	–	740501
	NP1	–	740502
gamma/ 5 0423-DN 10	TT	910993	910993
	SS	910995	910995
	PP1	910991	–
	NP1	910989	–
	PP2	–	740509
	NP2	–	740398
	PP1	–	740507
	NP1	–	740508
Spare parts kits gamma/ 5	TT	910931	910931
	SS	910933	910933
	NP1	910935	–
	PP1	910937	–
	PP2	–	740509
	NP2	–	740398
	NP1	–	740508
	PP1	–	740507

1.9 Mechanical/Hydraulic Special Accessories

PTFE Pump diaphragms

ProMinent® DEVELOPAN® pump diaphragms in EPDM with woven inner layer, integrally vulcanised steel core and PTFE Teflon coating on the side in contact with the dosing chemical.

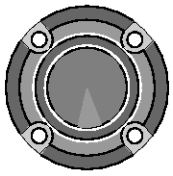

pk_1_008

Pump type	Order no.
9.20, gamma/ 4 1000,1001	811452
9.21, gamma/ 4 1601,1602	811453
9.22, gamma/ 4 1201,1203	811454
9.23, gamma/ 4 0703, 0706	811455
9.33, gamma/ 4 1002, 1003	811456
9.44, gamma/ 4 0308, 0313, gamma/ 5 1605, gamma/ 5 1006	1002511
9.46, gamma/ 5 0215, 0223, gamma/ 5 1310, gamma/ 5 0613	811458
9.55, gamma/ 5 0813, gamma/ 5 0417	811459
9.66, gamma/ 5 0423, gamma/ 5 0230	811460

Spare parts kits CONCEPT

Kits for PP and NP material versions:

1 pump diaphragm
1 suction valve compl.
1 discharge valve compl.
2 valve balls
1 seal set
1 connector set

CONCEPT spare parts kits are identical to gamma/ 4.

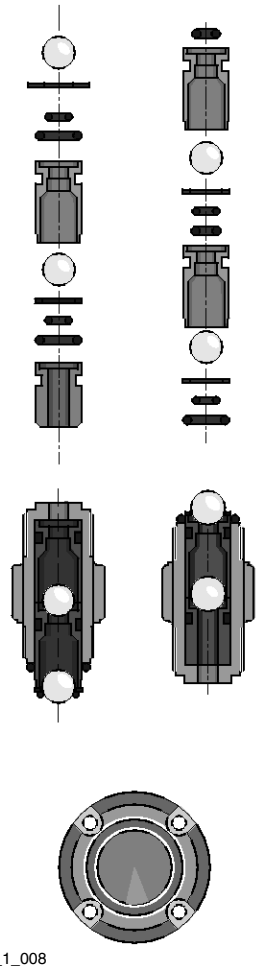

pk_1_008

Pump type	Material	Order no. version a	Order no. version b
Type 1601	PP1	–	740361
	NP6	–	740551
	NS3/PS3	792033	792033
	PP1	910720	–
	NP1	910719	–
	PP1	–	740361
	NP6	–	740551
Type 1201	NS3/PS3	792034	792034
	NP1	910723	–
	PP1	910724	–
	NP6	–	740552
	PP1	–	740380
Type 0703/0803	NS3/PS3	792035	792035
	PP1	910728	–
	NP1	910727	–
	NP6	–	740553
	PP1	–	740384
Type 1002	NS3/PS3	792036	792036
	PP1	910732	–
	NP1	910731	–
	NP6	–	740554
	PP1	–	740388
Type 0306/0308	PP1	910736	–
	NP1	910735	–
	NP6	–	740555
	PP1	–	740497
Type 0212/0215	PP1	910740	–
	NP1	910739	–
	NP6	–	740556
	PP1	–	740499

1.9 Mechanical/Hydraulic Special Accessories

1.9.2 Pump Diaphragms

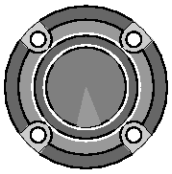

pk_1_008

PTFE Pump diaphragms

ProMinent® DEVELOPAN® pump diaphragms in EPDM with woven inner layer, large surface area, integrally vulcanised steel core and PTFE Teflon coating on the side in contact with chemicals.

Description for pump type	Order no.
9.21, CONCEPT 1601	811453
9.22, CONCEPT 1201	811454
9.23, CONCEPT 0703/0803	811455
9.33, CONCEPT 1002	811456
9.44, CONCEPT 0306/0308	1002511
9.46, CONCEPT 0212/0215	811458

Diaphragm PTFE/FPM

ProMinent® EPDM diaphragm with woven fabric core, one PTFE and one FPM layer on side in contact with medium. Particularly suitable for metered media containing microcrystals, e.g. silicate.Suitable for Beta® and gamma/ L pumps*

Pump type	Order no.
1601	1024168
1602	1024169
1005 / 1605	1024170
0708 / 1008	1024171
0413 / 0713	1024172
0220 / 0420	1024173

* Identcode letter "S", e.g. BT4A1002PPS...

Diaphragm EPDM

ProMinent® diaphragms made of EPDM with woven inner layer.

Max. operating pressure 6 bar.

Pump type	Order no.
1000	1001444
1601	1001445
1602	1001446
1005 / 1605	1001447
0708 / 1008	1001448
0413 / 0713	1001449
0220 / 0420	1001450
0232	1001451

* Identcode letter "P", e.g. BT4A1002PPP...

1.9 Mechanical/Hydraulic Special Accessories

1.9.3 Custom Valve Balls/Valve Springs

For on-site retrofitting of dosing pumps and accessories, for applications where standard material is unsuitable. Supplied loose only, not fitted.

Valve balls

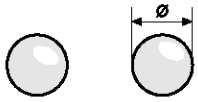

pk_1_102

Material	Ø mm		Order no.
PTFE	4.7	for valve Ø 6 mm	404255
PTFE	9.5	for valve Ø 8 and 12 mm	404258
PTFE	11.0	for valve DN 10	404260
PTFE	16.0	for valve DN 15	404259
Ceramic	4.7	for valve Ø 6 mm	404201
Ceramic	9.5	for valve Ø 8 and 12 mm	404281
Ceramic	11.0	for valve DN 10	404277
Ceramic	16.0	for valve DN 15	404275

Valve springs for liquid ends

with approx. 0.1 bar priming pressure for spring loading of the valve balls in the liquid end. Recommended to improve the valve function and to increase the metering accuracy, in particular for viscous metering media above 50 m Pas.

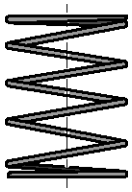
pk_1_103

Material	Prepressure bar		Order no.
1.4571	0.1	for valve 4.7	469406
1.4571	0.1	for valve 9.2	469403
1.4571	0.1	for mikro g/ 5	469437
1.4571	0.1	for mikro g/ 5	469438
1.4571	0.1	for mikro g/ 5	469439
Hast. C	0.1	for valve DN 10	469114
Hast. C	0.1	for valve DN 15	469107

Valve springs for injection valves

Approx. 0.5/1/2 bar prepressure for increasing metering accuracy and preventing suction and siphoning effect.

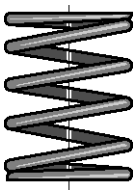
pk_1_104

Material	Prepressure bar		Order no.
1.4571	1.0	for R 1/4" - Ø 6 mm connector	469401
Hast. C	0.5	for R 1/2" - Ø 6, 8 and 12 mm connector	469404
Hast. C	1.0	for R 1/2" - Ø 6, 8 and 12 mm connector	469413
Hast. C	2.0	for R 1/2" - Ø 6, 8 and 12 mm connector	469410
Hast. C	0.5	for DN 10	469115
Hast. C	1.0	for DN 10	469119
Hast. C	0.5	for DN 15	469108
Hast. C	1.0	for DN 15	469116

Valve spring made of Hastelloy C with FEP coating

Material	Prepressure bar		Order no.
Hast. C/PVDF	0.5	for R 1/2" - Ø 6, 8 and 12 mm connector	818590
Hast. C/PVDF	1.0	for R 1/2" - Ø 6, 8 and 12 mm connector	818536
Hast. C/PVDF	0.5	for DN 10	818515
Hast. C/PVDF	0.5	for DN 15	818516

1.9.4 Connector Parts/Fittings

Hose/adhesive nipple PVC*

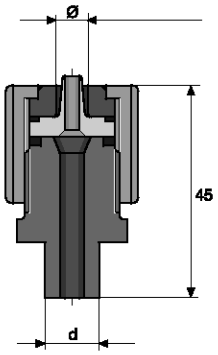

pk_1_107

With union nut, for connection of PE tubing to rigid PVC fittings for on-site construction of connector system.

	d mm		oØ x iØ mm	fig.	Order no.
Nozzle/solvent union	12	for hose	6 x 4	pk_1_107	817088
	12	for hose	8 x 5	pk_1_107	817089
	12	for hose	12 x 9	pk_1_107	817090
	12	for hose	12 x 6	pk_1_107	817091
	16	for hose	6 x 4	pk_1_107	817092
	16	for hose	8 x 5	pk_1_107	817093
	16	for hose	12 x 9	pk_1_107	817094
	16	for hose	12 x 6	pk_1_107	817095

* **Caution:** The product contains adhesive joints with Tangit. Please note the resistance of the Tangit adhesive.

PVC Straight solvent union

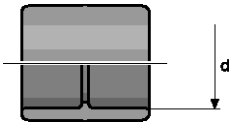

pk_1_109

	d mm		fig.	Order no.
PVC Straight solvent union	12	DN 8	pk_1_109	356608
	16	DN 10	pk_1_109	356609
	20	DN 15	pk_1_109	356610
	25	DN 20	pk_1_109	356611

PVC T-joint

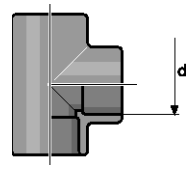

pk_1_113

	d mm		fig.	Order no.
PVC T-joint	12	DN 8	pk_1_113	356406
	16	DN 10	pk_1_113	356407
	20	DN 15	pk_1_113	356408
	25	DN 20	pk_1_113	356409

90° PVC Elbow joint

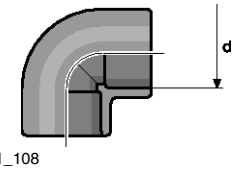

pk_1_108

	d mm		fig.	Order no.
90° PVC Elbow joint	12	DN 8	pk_1_108	356315
	16	DN 10	pk_1_108	356316
	20	DN 15	pk_1_108	356317
	25	DN 20	pk_1_108	356318

PVC insert (Straight solvent union)

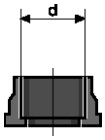

pk_1_115

	d mm		fig.	Order no.
PVC insert (Straight solvent union)	12	DN 8	pk_1_115	356571
	16	DN 10	pk_1_115	356572
	20	DN 15	pk_1_115	356573
	25	DN 20	pk_1_115	356574

1.9 Mechanical/Hydraulic Special Accessories

PVC Short reducing union

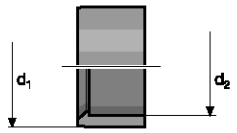

pk_1_110

	d1 mm	d2 mm	fig.	Order no.
PVC Short reducing union	12	8	pk_1_110	357025
	16	10	pk_1_110	357026
	20	16	pk_1_110	357027
	25	20	pk_1_110	357028

PVC Hose connection nozzle

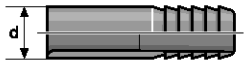

pk_1_111

	d mm		fig.	Order no.
PVC Hose connection nozzle	12	DN 8	pk_1_111	356655
	16	DN 10	pk_1_111	356656
	20	DN 15	pk_1_111	356657
	25	DN 20	pk_1_111	356658

Hose nozzle with seal



pk_2_046

Material	d mm		fig.	Order no.
PVC	16	DN 10	pk_2_046	800554
PVC	20	DN 15	pk_2_046	811407
PVC	25	DN 20	pk_2_046	811408
PP	16	DN 10	pk_2_046	800657
PP	20	DN 15	pk_2_046	800655
PP	25	DN 20	pk_2_046	800656

Union nuts

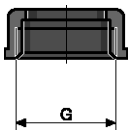

pk_1_116

Material	G	fig.	Order no.
PP	G 5/8 - DN 8	pk_1_116	800665
PP	G 3/4 - DN 10	pk_1_116	358613
PP	G 1 - DN 15	pk_1_116	358614
PP	G 1 1/4 - DN 20	pk_1_116	358615
PVC	G 5/8 - DN 8	pk_1_116	800565
PVC	G 3/4 - DN 10	pk_1_116	356562
PVC	G 1 - DN 15	pk_1_116	356563
PVC	G 1 1/4 - DN 20	pk_1_116	356564
PVDF	G 3/4 - DN 10	pk_1_116	358813

1.9 Mechanical/Hydraulic Special Accessories

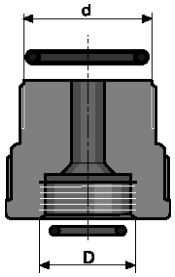

pk_1_114

Single adapter kit

For connection of system + GF+ threaded connectors to dosing pumps and accessories.

Material	Size	Internal thread D	External thread d	Order no.
PP/EPDM	For DN 8 threaded connector	M20 x 1,5	G 5/8	817164
PP/FPM	For DN 8 threaded connector	M20 x 1,5	G 5/8	740604
PVC/EPDM	For DN 8 threaded connector	M20 x 1,5	G 5/8	740583
PVC/FPM	For DN 8 threaded connector	M20 x 1,5	G 5/8	817069
PVDF/PTFE	For DN 8 threaded connector	M20 x 1,5	G 5/8	1031073
PP/EPDM	For DN 10 threaded connector	M20 x 1,5	G 3/4	817165
PP/FPM	For DN 10 threaded connector	M20 x 1,5	G 3/4	817178
PVC/EPDM	For DN 10 threaded connector	M20 x 1,5	G 3/4	740585
PVC/FPM	For DN 10 threaded connector	M20 x 1,5	G 3/4	740601
PVDF/PTFE	For DN 10 threaded connector	M20 x 1,5	G 3/4	1028409

Single adapter kit

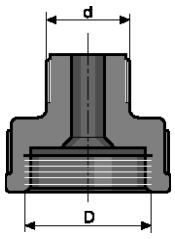

pk_1_124

For fitting series A, B, C, E and EXtronic® accessories to current metric M20 x 1.5 connectors.

Material	Size	Internal thread D	External thread d	Order no.
PP	6-8 mm connector	M 20 x 1.5	G 1/4	811904
PVC	6-8 mm connector	M 20 x 1.5	G 1/4	811902

Double adapter set

Material	Quantity	Internal thread D	External thread d	Order no.
PP/EPDM	1x / 1x	M20 x 1.5 / G 5/8	G 5/8 / M20 x 1.5	817154
PVC/FPM	1x / 1x	M20 x 1.5 / G 5/8	G 5/8 / M20 x 1.5	817054

Double adapter kit

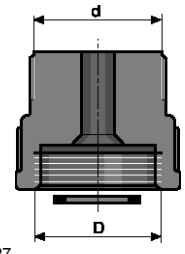

pk_1_127

For fitting laboratory type GL connectors, manufacturers Bola or Schott.

Material	Size	Internal thread D	External thread d	Order no.
PTFE	GL 18	M20 x 1.5	GL 18	1000990

Single adapter kit

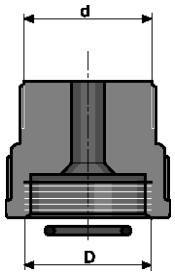

pk_1_122

For fittings of current accessories with metric M20 x 1.5 connectors to series A, B, C and E.

Material	Size	Internal thread D	External thread d	Order no.
PP/EPDM	6-8 mm connector	G 1/4	M 20 x 1.5	741088
PVC/FPM	6-8 mm connector	G 1/4	M 20 x 1.5	741087
PTFE	6-8 mm connector	G 1/4	M 20 x 1.5	741091
PP/EPDM	12 mm connector	G 3/8	M 20 x 1.5	741090
PVC/FPM	12 mm connector	G 3/8	M 20 x 1.5	741089
PTFE	12 mm connector	G 3/8	M 20 x 1.5	741092

1.9 Mechanical/Hydraulic Special Accessories

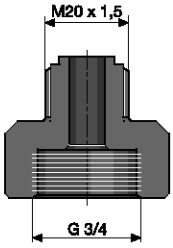

pk_1_112

Adapter

Fits connector set for 12 x 9 hose.

Material	Internal thread D	External thread d	Order no.
PP	DN 10, G 3/4	M20 x 1.5	800815
PVC	DN 10, G 3/4	M20 x 1.5	800816
PVDF	DN 10, G 3/4	M20 x 1.5	1017406

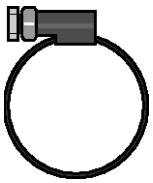

pk_1_068

Stainless steel threaded clip

For connection of suction and delivery tubing to pressure nozzle.

	Clamping range mm	Order no.
DN 10 clamping ring	16 – 25	359703
DN 15 clamping ring	20 – 32	359705

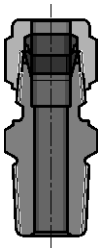

pk_1_028

Stainless steel straight threaded male adapter

Swagelock system, stainless steel SS 316 (1.4401) for fitting tubing to inner threaded liquid ends and valves with for SB version.

	Order no.
6 mm - ISO 7 R 1/4	359526
8 mm - ISO 7 R 1/4	359527
12 mm - ISO 7 R 1/4	359528
12 mm - ISO 7 R 3/8	359520
16 mm - ISO 7 R 3/8	359521
16 mm - ISO 7 R 1/2	359529

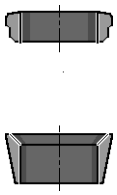

pk_1_117

Stainless steel clamping ring sets

For use with stainless steel threaded connectors for dosing pumps and Swagelock accessories. Both parts must be replaced at the same time. Consist of back and front clamping rings.

	oØ mm	Order no.
Set of ring Ø 6 for line	6	104232
Set of ring Ø 8 for line	8	104236
Set of ring Ø 12 for line	12	104244

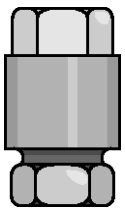

pk_1_118

Stainless steel threaded connector

Serto system for connecting PE or PTFE discharge line to stainless steel pipe, made from stainless steel with clamping ring, but without support insert (parts in contact with chemicals stainless steel 1.4571).

	Order no.
6 mm outer diameter to 6 mm outer diameter stainless steel pipe	359317
8 mm outer diameter to 8 mm outer diameter stainless steel pipe	359318
12 mm outer diameter to 12 mm outer diameter stainless steel pipe	359320

1.9 Mechanical/Hydraulic Special Accessories

1.9.5 Thermal Flow Monitors

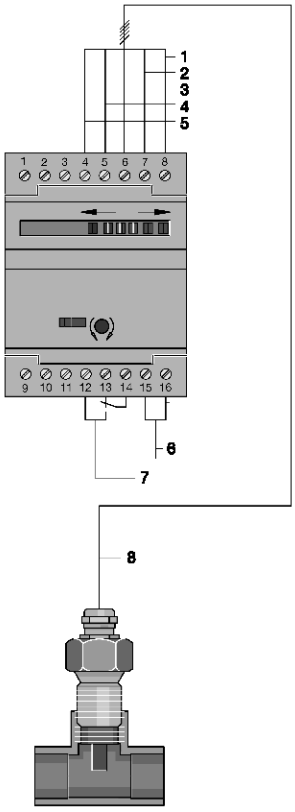

pk_1_119

1 grey
2 black
3 brown
4 blue
5 white
6 Mains voltage
7 Relay flow control
8 Connecting for sensor

The flow monitor consists of a sensor and evaluation electronics. It operates on the principle of heat transfer in the water flow. It may be used with all solenoid and motor-driven dosing pumps with continuous flow of more than 0.5 l/h.

Evaluation electronics

When liquids are flowing the changeover relay closes (switching power 250 V/4 A). When liquids cease to flow the relay opens for a set delay period of between 3-20 sec. LEDs indicate switching status. Allows smooth adjustment of flow volume.

Enclosure rating:	Housing IP 40 Terminal boxes IP 00
Ambient temperature:	0 °C to +60 °C

Electrical connection	Order no.
230 V, 50/60 Hz	792886

Probe C

Single ceramic gauge

Outer thread:	G 1/2
Temperature range:	+5 °C to +60 °C medium temperature, not suitable for alkaline solutions
Supply line:	Fixed connection, cable length 2 m
Max. cable length	100 m
Enclosure rating:	IP 67
Pressure rating:	7 bar

	Order no.
Application range: 0-60 cm/s	1022339

Probe S

Single section metal encapsulated gauge, stainless steel 14571

Outer thread:	G 1/2
Temperature range:	-25 °C to +80 °C medium temperature
Supply line:	Fixed connection, cable length 2 m
Max. cable length:	100 m
Enclosure rating:	IP 67
Pressure rating:	30 bar

	Order no.
Application range: 1 cm/s to 5 m/s	792888

Connector parts required (T-joint, bypass) must be ordered separately.

1.10 Application Examples

1.10.1 Volume-proportional Metering Of Chlorine Bleach Solution In Drinking Water

Product:	**Beta®**
Metered medium:	**NaOCl**
Sector:	**Drinking water**
Application:	**Disinfection**

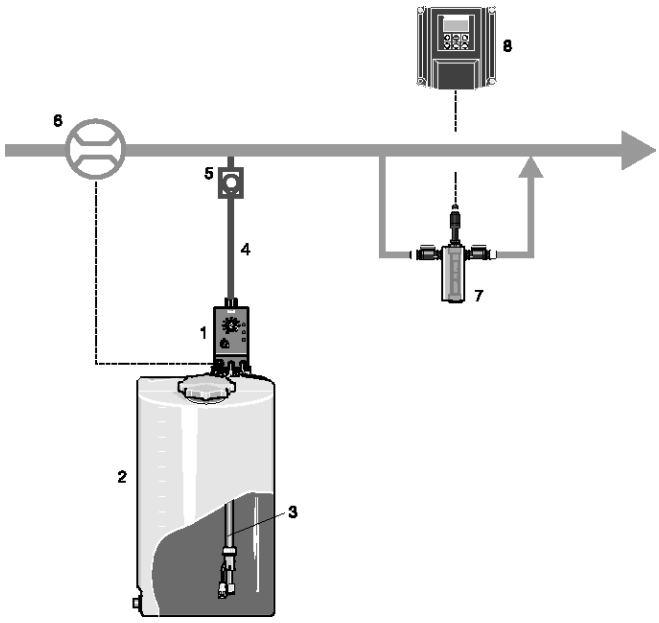

pk_1_132

1 Beta®/ 4 with self-venting liquid end made from PMMA/PVC (Plexiglas))
2 Dosing tank
3 Intake fitting for foot valve and level switch
4 Soft PVC metering line with woven fabric or PTFE
5 Metering valve
6 Contact water meter
7 Chlorine measuring sensor
8 Control measurement

Task and requirements

- Volume-proportional feed of chlorine bleach solution into the main water flow
- Monitoring of chlorine content after metering

Operating conditions

- Variable flow
- Installation in closed buildings

Application information

- The metered medium emits gas. Therefore, after a longer pump standstill period, an air (gas) bubble may have formed in the metering line causing an interruption in metering operation.
- Metering is to take place fully automatically and without malfunctions as operating personnel are not always present in the waterworks or water supply.

Solution

- Beta® solenoid-driven metering pump with self-venting liquid end
- Contact water meter in main line for pump activation
- DULCOMETER® measurement and control technology for final inspection

Benefits

- High degree of reliability provided by self-venting liquid end
- Reliable protection against overmetering and undermetering with downstream final inspection

1.10 Application Examples

1.10.2 Shock Metering Of Biocide In Cooling Water Circuit

Product:	**gamma/ L**
Metering medium:	**biocide**
Industry:	**cooling water treatment**
Application:	**disinfection**

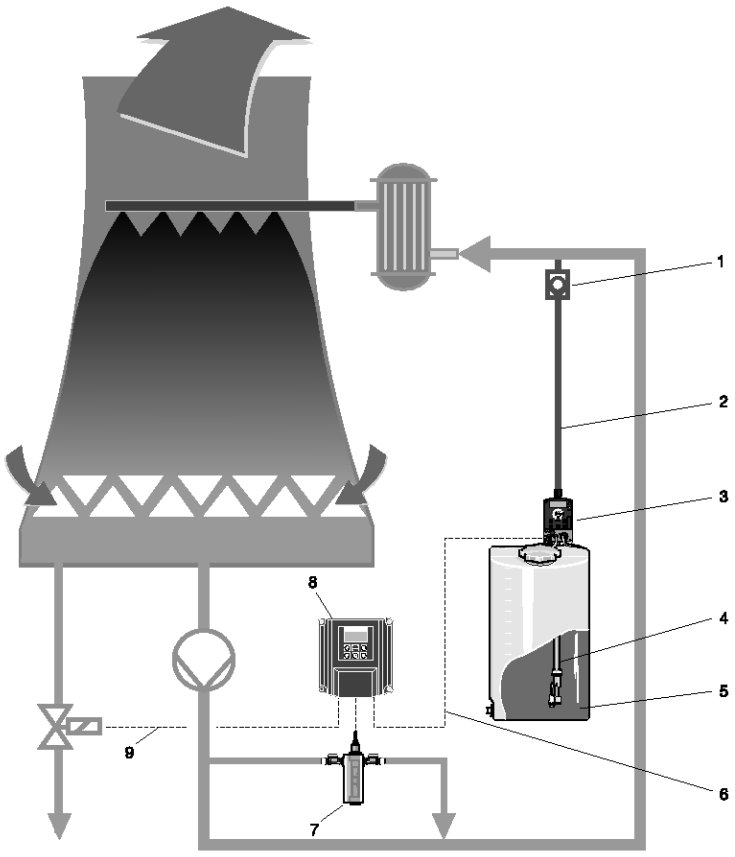

1 Metering
2 Metering line
3 gamma/ L with process timer
4 Intake fitting for foot valve and level switch
5 Metering tank
6 Relay output for deactivation of conductivity-controlled desalination during biocide shock metering
7 Conductivity sensor
8 D1C conductivity
9 Activation – solenoid valve for desalination
10 Waste water

pk_1_133

Tasks and requirements

- Increasing the biocide content e.g. at weekly intervals destroys all biology in the cooling water.
- Local increases in concentration may occur resulting in conductivity-controlled desalination. They disappear again after full distribution in the cooling water circuit.
- Conductivity-controlled desalination must therefore be deactivated during shock metering and for an appropriate time afterwards.

Operating conditions

- Aggressive chemicals (oxidising)
- Installation of the metering pump in the building

Notes on application

- Shock metering takes place at defined intervals, e.g. weekly.
- In smaller cooling circuits, the metering pump with the integrated process timer replaces the PLC.
- Irrespective of the set metering times, conductivity-controlled desalination must be deactivated via a potential-free contact.
- In some cases, desalination is performed before each shock metering cycle. This procedure must be controlled by means of a second relay contact in the pump.

1.10 Application Examples

Solution

- gamma/L with process timer and corresponding relay outputs
- The relays can be assigned to the process timer as needed and execute the necessary switching functions.
- The pump itself operates at the specified metering times.
- The metering program can be set up on a PC and can be downloaded on site to the pump.
- Metering programs can e.g. be sent by e-mail.
- Liquid end made of PVDF for high chemical resistance

Benefit

- High IP rating IP75 for the control through integration into the pump.
- Cost savings since no PLC required
- Saving of installation costs thanks to compact design
- Simple and safe setting up of programs at the PC
- Fast downloading to the pump, especially in cases where several pumps run with the same program.

1.10 Application Examples

1.10.3 Detergent Metering In An Industrial Dishwasher

Product:	**delta® with optoDrive®**
Feed chemical:	**dishwashing detergent**
Industry:	**catering**
Application:	**dishwashers**

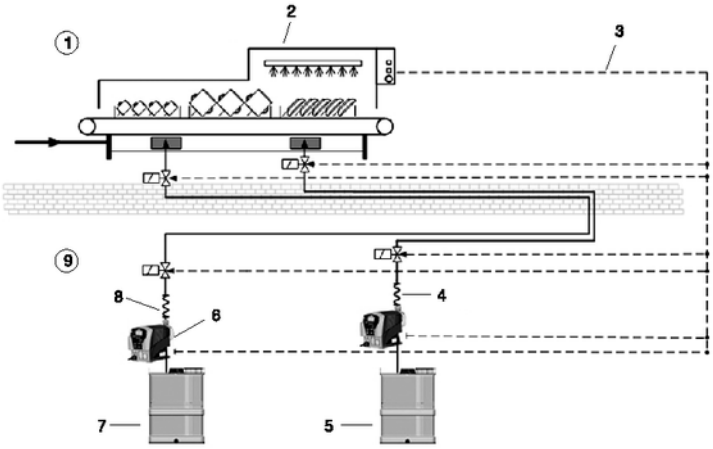

1 Kitchen
2 Dishwasher
3 Control circuit
4 Flexible connection
5 Rinser
6 optoDrive® delta® metering pumps
7 Cleaner
8 Flexible connection
9 Basement
10 Water

pk_1_134

Tasks and requirements

- Metering of cleaning and rinse aid chemicals for the dishwasher from the basement to the upper floors.
- Low-pulsation chemical metering.

Operating conditions

- Stainless steel pipes of up to 100 m of length across several floors.
- Defined metering volume.
- Metering only with conveyor belt in operation.
- Continuous metering.

Notes on application

- Drive of the metering pump when conveyor belt is started via potential-free contact ON / OFF (pause function).
- Typically, a hose of approx. 0.5 m is installed between the metering pump and the rigid stainless steel pipe to prevent tensions in the piping system.
- Because cleaning agents are normally very slick which might result in chemical leaks, the hoses are to be installed properly.
- Solenoid valves (pressure-retaining valves or metering valves are no leak-proof shut-off devices) are to be used to protect against backflow at stop.
- The metering system shows an inert behaviour because of the pipe length: Delayed response (at start) and dripping (at stop) at the metering point. For this reason, solenoid valves are to be used there.

Solution

- optoDrive® solenoid pumps delta®.
- Solenoid valves.

Benefit

- Fully-automatic operation with a minimum of staff and maintenance.
- Safe metering with the integrated injection control optoGuard®.
- Favourable price-performance ratio. No additional pulsation dampening is required thanks to the low-pulsation metering characteristics of the pump.
- Customer-specific process design thanks to adaptation of the pump to the properties of the feed chemical.

1.10 Application Examples

2 Motor Driven Metering Pumps

Contents Page

2.0 Overview Motor Driven Metering Pumps 1
2.0.1 Product Overview 1
2.0.2 Selection Guide 3
2.0.3 Installation Options 5

2.1 Vario C Diaphragm Metering Pumps 6
2.1.1 Vario C Diaphragm Metering Pumps 6
2.1.2 Identcode Ordering System VAMc 8
2.1.3 Spare Parts 9

2.2 Sigma/ 1 Diaphragm Metering Pumps 10
2.2.1 Sigma/ 1 Diaphragm Metering Pumps 10
2.2.2 Identcode Ordering System Basic Type S1Ba 12
2.2.3 Identcode Ordering System Control Type S1Ca 13
2.2.4 Spare Parts 14

2.3 Sigma/ 2 Diaphragm Metering Pumps 16
2.3.1 Sigma/ 2 Diaphragm Metering Pumps 16
2.3.2 Identcode Ordering System Basic Type S2Ba 18
2.3.3 Identcode Ordering System Control Type S2Ca 19
2.3.4 Spare Parts 20

2.4 Sigma/ 3 Diaphragm Metering Pumps 22
2.4.1 Sigma/ 3 Diaphragm Metering Pumps 22
2.4.2 Identcode Ordering System Basic Type S3Ba 24
2.4.3 Identcode Ordering System Control Type S3Ca 25
2.4.4 Spare Parts 26

2.5 Hydraulic/Mechanical Accessories 28
2.5.1 Foot Valves 28
2.5.2 Injection Valves 30
2.5.3 Pressure Relief Valves/Overflow Valves 32
2.5.4 Suction Assembly 35
2.5.5 Fittings 36
2.5.6 Pulsation damper 38
2.5.7 Accumulators 41
2.5.8 Accumulators Without Diaphragm 41
2.5.9 Connector Parts, Seals, Hoses 45
2.5.10 Metering pump wall mounting bracket 50

2.6 Electrical Accessories 51
2.6.1 Controllers 51
2.6.2 Speed Controllers 52
2.6.3 General Electrical Accessories 54

2.7 Special Accessories 56
2.7.1 Custom Accessories 56

2.8 Application Examples 59
2.8.1 Metering Of Highly Viscous Substances 59
2.8.2 Mixing Two Reagents 60
2.8.3 Safe And Reliable Chemical Metering With Reduced Pulsation 62

2.0 Overview Motor Driven Metering Pumps

2.0.1 Product Overview

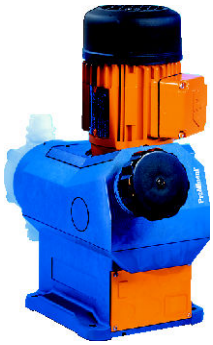

pk_2_107

Vario C Motor Diaphragm Metering Pump

Capacity range 8 – 64 l/h, 10 – 4 bar

This metering pump is particularly suitable for use in applications requiring continuous metering. It is designed for simple metering tasks.

The Vario C is the basic model and does not feature integrated electronics. The drive motor is optionally available as a 3-phase 230/400 V, 50/60 Hz, 1-phase 230 V, 50 Hz or 1-phase 115 V 60 Hz motor.

With the PVDF or stainless steel liquid end, virtually universal resistance to chemicals is ensured in a diverse range of applications.



P_SI_066_C1

Sigma/ 1 Motor Diaphragm Metering Pump

Capacity range 17 – 120 l/h, 12 – 4 bar

This metering pump is available as the basic version without its own internal electronics and in a microprocessor-controlled version. The pump covers the lower feed rate range of the Sigma series.

The basic version is suitable for continuous metering tasks or for use in explosion hazard areas.

The control version offers many control and signalling options such as

contact activation, analogue control,

PROFIBUS® DP interface,

diaphragm failure signalling etc.

The vast variety of options is spedified in the identcode.

For Identcode see Pages → 2-11 and → 2-12.

The delivery unit has a patented multilayer safety diaphragm as standard and a visual diaphragm rupture indicator.

NEW



P_SI_0016

Sigma/ 2 Motor Diaphragm Metering Pump

Capacity range 48 – 350 l/h, 16 – 4 bar

With a feed rate of up to 420 l/h, this metering pump covers the medium performance range of the Sigma series.

The basic version is suitable for continuous metering tasks or for use in explosion hazard areas.

The control version offers many control and signalling options such as

contact activation, analogue control,

PROFIBUS® DP interface,

diaphragm failure signalling etc.

The vast variety of options is spedified in the identcode.

For Identcode see Pages → 2-17 and → 2-18.

The delivery unit has a patented multilayer safety diaphragm as standard and a visual diaphragm rupture indicator.

2.0 Overview Motor Driven Metering Pumps



P_SI_0017_C

Sigma/ 3 Motor Diaphragm Metering Pump

Capacity range 145 – 1030 l/h, 12 – 4 bar

With a feed rate of up to 1.030 l/h, this metering pump is the high-performance model of the Sigma series. All Sigma pumps are available in the basic version and in a microprocessor version.

The basic version is suitable for continuous metering tasks or for use in explosion hazard areas.

The control version offers many control and signalling options such as

contact activation, analogue control,

PROFIBUS® DP interface,

diaphragm failure signalling etc.

The vast variety of options is spedified in the identcode.

For Identcode see Pages → 2-23 and → 2-24.

The delivery unit has a patented multilayer safety diaphragm as standard and a visual diaphragm rupture indicator.

2.0 Overview Motor Driven Metering Pumps

2.0.2 Selection Guide

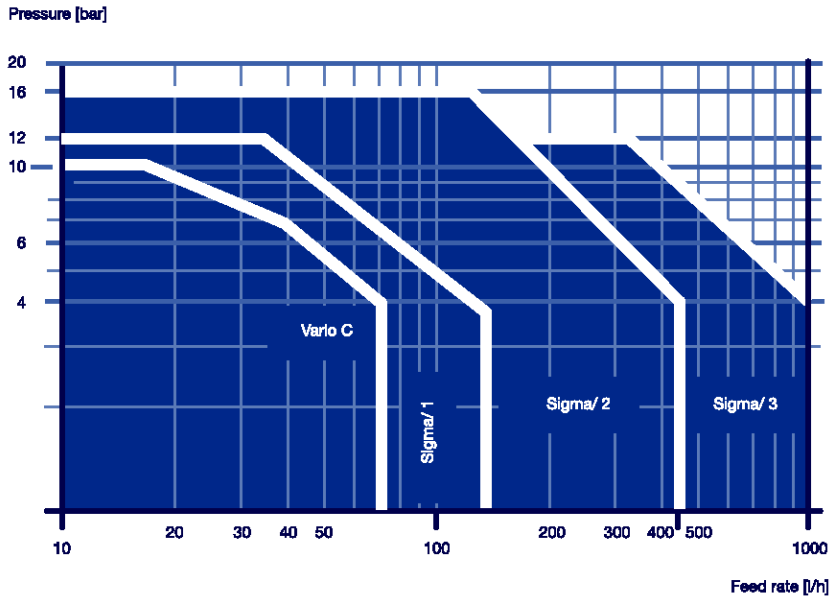

pk_2_diagramm

ProMinent offers an extensive range of metering pumps with an capacity rating of up to 1.000 l/h. All oscillating positive-displacement pumps feature a leak-free, hermetically sealed metering chamber and an identical operating structure.

Applications

- General: Chemical feed and metering up to 1000 l/h
- Drinking water treatment: Metering of disinfectants
- Cooling circuits: Metering of disinfectants
- Waste water treatment: Metering of flocculants
- Paper industry: Metering of additives
- Plastics manufacturing: Metering of additives

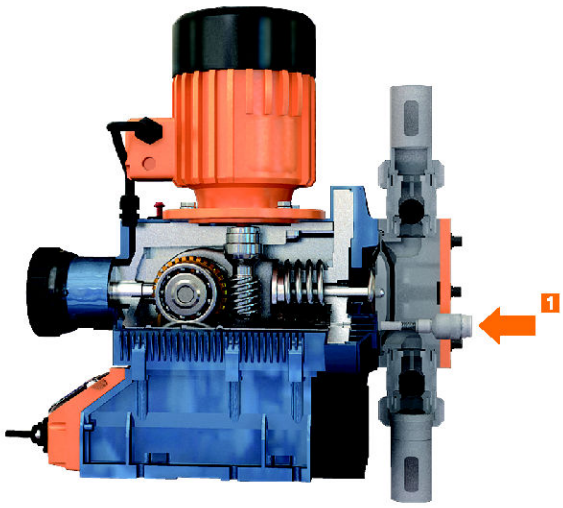

P_SI_0064_C3

1: Sigma multi-layer safety diaphragm

2.0 Overview Motor Driven Metering Pumps

Features

- Extremely wide performance range
- High degree of metering accuracy even under fluctuating pressure conditions (pressure-stable characteristic) for effective saving of chemicals and exact process control
- Sturdy and inexpensively priced drive unit with high feed rate ratings
- Simple integration and retrofitting in automated processes through flexible activation via stroke length and motor speed control
- Maximum reliability ensured by multilayer safety diaphragm with diaphragm rupture indicator and integrated overload safeguard

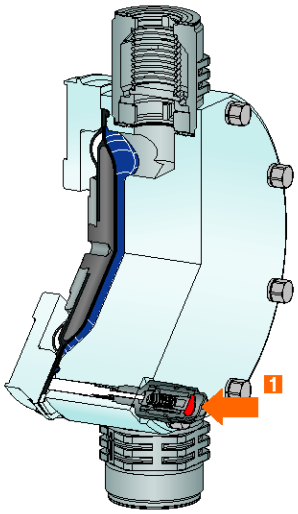

P_SI_0065_C3

1: Diaphragm rupture sensor

2.0 Overview Motor Driven Metering Pumps

2.0.3 Installation Options

The smooth operation of metering systems depends not only on choosing the correct model for your application, but also on the correct installation of application specific accessories. The drawing below illustrates a variety of accessory components, not all of which will be required for every plant, but which gives an overview of what can be achieved in practical terms.

We are always at your service, to help you choose the right accessories for your processing application, and to provide any additional technical advice (e.g. calculating pipe work requirements).

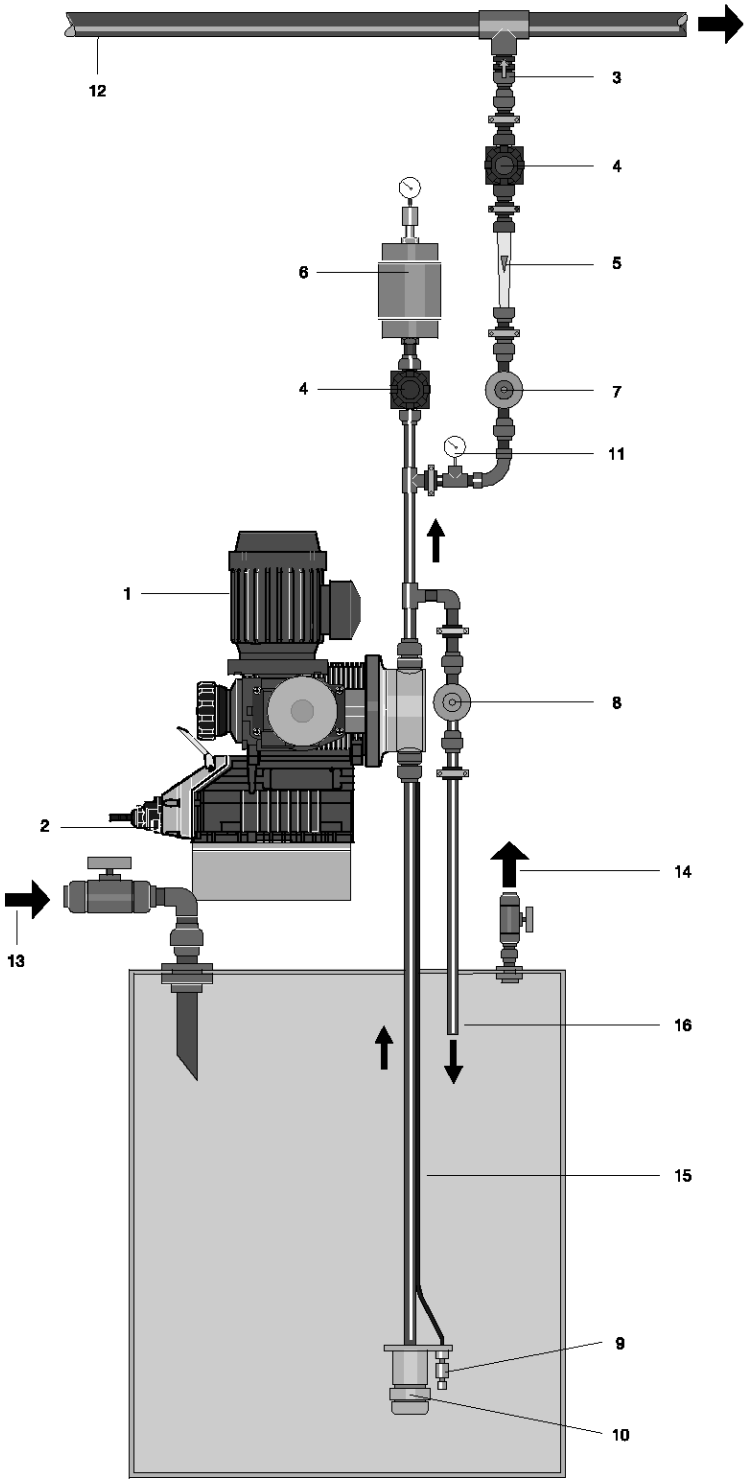

1 Metering pump
2 Actuation and control options
3 Injector valve
4 Isolation assembly
5 Flow measurement/monitoring
6 Pulsation dampener
7 Back pressure valve
8 Relief valve in bypass line
9 Float switch
10 Foot valve
11 Pressure gauge
12 System line
13 Filling
14 Vent
15 Metering line
16 Bypass

pk_2_000_1

2.1 Vario C Diaphragm Metering Pumps

2.1.1 Vario C Diaphragm Metering Pumps

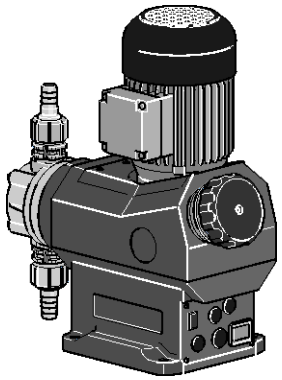

pk_2_126

The Vario C motor diaphragm metering pump is available in the standard version fitted with a 0.07 kW 230/400 V 50/60 Hz 3-phase AC motor and alternatively with a 0.06 kW, 230 V 50 Hz or 115 V 60 Hz single-phase AC motor. The capacity ranges between 8-76 l/h at a max. backpressure of 10-4 bar. The feed rate can be adjusted by a self-locking rotary dial in 1 % steps via the stroke length (3 mm).

The reproducibility of the metering is better than ±2 % in the stroke length range of 30% - 100% given defined conditions and correct installation. (The notes in the operating instructions must be observed.)

The rugged, corrosion-resistant metal-plastic housing has the IP rating IP65. A choice of 4 gear ratios, 2 liquid end sizes, 4 liquid end materials (PP, PVC, SS and PVDF on request) allows the pump to be ideally matched to the basic metering tasks.

For safety-technical reasons, suitable overflow guards are to be installed in all motor metering pumps.

Technical Data

Type	With motor 1500 rpm at 50 Hz				With motor 1800 rpm at 60 Hz			Suction height	Perm. admiss. pressure suction side	Connection, suction/ pressure side
	Delivery rate at max. backpressure			Max. stroke rate	Delivery rate at max. backpressure		Max. stroke rate			
	bar	l/h	ml/ stroke	Strokes/ min	psi	l/h / gph	Strokes/ min	mWC	bar	G–DN
10008	10	8	3.6	38	145	9.6/2.5	45	7	2.8	3/4–10
10016	10	16	3.6	77	145	19.2/5.1	92	7	2.8	3/4–10
07026	7	26	3.6	120	100	31.2/8.2	144	7	2.8	3/4–10
07042	7	42	3.6	192	100	50.4/13.3	230	7	2.8	3/4–10
07012	7	12	5.4	38	100	14.4/3.8	45	6	1.7	3/4–10
07024	7	24	5.4	77	100	28.8/7.6	92	6	1.7	3/4–10
04039	4	40	5.4	120	58	48.0/12.7	144	6	1.7	3/4–10
04063	4	64	5.4	192	58	76.8/20.3	230	6	1.7	3/4–10

The shipping weight of all pump types is 6/7.2 kg (PVDF/SS)

Materials in contact with medium

Material	Liquid end	Suction/pressure connector	Seals	Valve balls	Valve seat
PPE	PP	PP	EPDM	Ceramic	PP
PCB	PVC	PVC	FPM	Ceramic	PVC
PVT *	PVDF	PVDF	PTFE	Ceramic	PTFE
SST	Stainless steel material number 1.4404	Stainless steel material number 1.4581	PTFE	Stainless steel material number 1.4404	PTFE

* on request

Motor Data

Identcode characteristic		Voltage supply		Remarks
S	3 ph, IP 55	220-240 V/380-420 V	50 Hz	0.07 kW
		250-280 V/440-480 V	60 Hz	0.07 kW
M	1 ph AC, IP 55	230 V ±5%	50/60 Hz	0.06 kW
N	1 ph AC, IP 55	115 V ±5 %	60 Hz	0.06 kW

Motor data sheets can be requested for more information.

Special motors or special motor flanges are available on request.

In compliance with the Ecodesign Directive 2005/32/EC, motors of less than 0.75 kW and motor that are designed for speed-controllable operation are not subject to the IEC2 standard.

2.1 Vario C Diaphragm Metering Pumps

2.1.2 Identcode Ordering System VAMc

Vario Diaphragm Metering Pump

VAMc	Type*								
		bar	l/h						
	10008	10	8						
	10016	10	16						
	07026	7	26						
	07042	7	42						
	07012	7	12						
	07024	7	24						
	04039	4	40						
	04063	4	64						
		Material Liquid end							
		PPE	PP, seal EPDM						
		PCB	PVC, seal FPM						
		PVT**	PVDF, PTFE seal						
		SST	stainless steel, PTFE seal						
			Liquid end version						
			0	no valve spring (standard) PVC					
			1	with 2 valve springs. Hastelloy C4					
				Hydraulic connection					
				0	standard connection				
				1	PVC union nut and insert				
				2	PP union nut and insert				
				3**	PVDF union nut and insert				
				4	Stainless steel union nut and insert				
				5	PP union nut and hose nozzle				
				6	PVC union nut and hose nozzle				
				7**	PVDF union nut and hose nozzle				
				8	Stainless steel union nut and hose nozzle				
					Version				
					0	with ProMinent® logo (standard)			
					1	without ProMinent® logo			
					M	modified			
						Electrical power supply			
						S	3 ph, 230 V / 400 V; 50/60 Hz		
						M	1 ph AC 230 V; AC 50 Hz		
						N	1 ph AC 115 V; AC 60 Hz		
							Stroke sensor		
							0	no stroke sensor	
							3	with stroke sensor (Namur)	
								Stroke length adjustment	
								0	manual (standard)

* digits 1 and 2=back pressure [bar]; digits 3, 4, 5=capacity [l/h]

** on request

2.1 Vario C Diaphragm Metering Pumps

2.1.3 Spare Parts

Spare parts kits normally include the parts of the liquid ends subject to wear.

Standard delivery package for PVT material version

1 pump diaphragm
1 suction valve set
1 discharge valve set
2 valve balls
1 set of seals (packing rings, ball seat housings)

Standard delivery package for SST material version

1 pump diaphragm
2 valve balls
1 set of seals (packing rings, flat seals, ball seat)

Vario spare parts kit

Applicable to Identcode: Type VAMc 10008, 10016, 07026, 07042

Delivery unit	Materials in contact with medium	Order no.
FM 042 - DN 10	PVT	1003641
FM 042 - DN 10	SST	910751

Applicable to Identcode: Type VAMc 07012, 07024, 04039, 04063

Delivery unit	Materials in contact with medium	Order no.
FM 063 - DN 10	PVT	1003642
FM 063 - DN 10	SST	910756

Pump diaphragms


pk_2_105_1

	Order no.
Vario with FM 042 Type VAMc 10008, 10016, 07026, 07042	811458
Vario with FM 063 Type VAMc 07012, 07024, 04039, 04063	811459

2.2 Sigma/ 1 Diaphragm Metering Pumps

2.2.1 Sigma/ 1 Diaphragm Metering Pumps

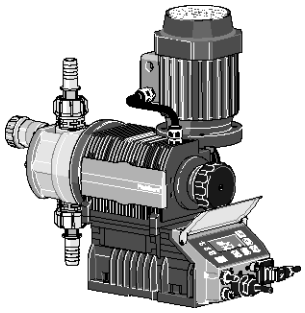

pk_2_001
Sigma/ 1

The Sigma/1 motor diaphragm metering pump has a high-strength inner metal housing for those component parts subjected to load as well as an additional plastic housing to protect against corrosion. The capacity ranges between 17-144 l/h at a max. backpressure of 4-12 bar. The feed rate can be adjusted by a self-locking rotary dial in 1 % steps via the stroke length (4 mm).

The reproducibility of the metering is better than ±2 % in the stroke length range of 30% - 100% given defined conditions and correct installation. (The notes in the operating instructions must be observed.)

The rugged, corrosion-resistant metal-plastic housing is combined with three gearbox ratios, three liquid end sizes and two liquid end materials. The Sigma control type (S1Ca) facilitates control via contact or analogue signals (e.g. 0/4-20 mA) which ensures a good adaptation, also to different metering tasks.

For safety-technical reasons, suitable overflow guards are to be installed in all motor metering pumps without integrated overload protections.

Sigma Basic Type (S1Ba)

The ProMinent® Sigma Basic type is a motor driven metering pump with no internal electronic control system. The ProMinent®SIBa has a number of different drive options, including the 3 ph. standard (standard IP 55) motor, or the single phase AC motor. We also supply metering pumps with ATEX-approval for use in EXe and EXde zones.

Different flanges are always available so that customers can use their own motor to drive the pump.

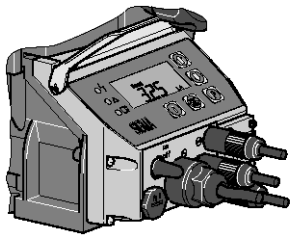

pk_2_104
Sigma Controller

Sigma Control Type (S1Ca)

The ProMinent® Sigma microprocessor version (standard IP 65) allows rapid and reliable adjustment to fluctuating metering requirements.

The controller has the same control panel as the ProMinent® gamma/ L metering pump.

The microprocessor controller of the Sigma pumps, featuring the optimum combination of variable AC frequency combined with digital stroking frequency, ensures exact metering even in the lower minimum range due to individual stroke control.

The individual pump functions are simply adjusted using the five programming keys. A backlit LCD indicates the current operating status, LEDs function as operation or fault indicators and fault indicator or pacing relays monitor the pump function.

Central or decentral adjustment is possible with PROFIBUS® and/or an integrated process timer.

Diaphragm Failure Indication (A)

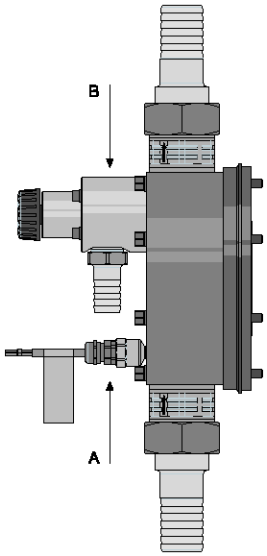

P_AC_0212_SW

The delivery unit has a patented multilayer safety diaphragm as standard and a visual diaphragm rupture indicator.

The diaphragm is coated with PTFE film on both sides, from the drive and working side. This guarantees that no leakages to the outside occur if the diaphragm ruptures. When the diaphragm ruptures, feed chemical enters between the diaphragm layers and thus triggers a mechanical indication or an alarm via the sensor area. This concepts ensures a reliable metering - even under critical operating conditions.

In connection with the S1Ca, continued metering or alternatively a stopping of the metering pump can be selected.

Integrated Relief-/Bleed Valve (B)

A liquid end variant with integrated hydraulic relief valve is optionally available for pressure ratings 4, 7, 10 and 12 bar. It protects the pump against overload and potential damage with no additional installation. This represents a considerable saving to the operator.

The integrated pressure relief valve offers the further advantage of effective bleeding of the injection valve during intake.

2.2 Sigma/ 1 Diaphragm Metering Pumps

Technical Data

Type	With motor 1500 rpm at 50 Hz				With motor 1800 rpm at 60 Hz			Suction height	Perm. admiss. pressure suction side	Connection, suction/ pressure side	Shipping weight
	Delivery rate at max. backpressure			Max. stroke rate	Delivery rate at max. backpressure		Max. stroke rate				
	bar	l/h	ml/ stroke	Strokes/ min	psi	l/h / gph	Strokes/ min	mWC	bar	G–DN	kg
12017 PVT	12	17	4.0	73	174.0	20/5.3	88	7	1	3/4–10	9
12017 SST	12	17	4.0	73	174.0	20/5.3	88	7	1	3/4–10	12
12035 PVT	12	35	4.0	143	174.0	42/11.1	172	7	1	3/4–10	9
12035 SST	12	35	4.0	143	174.0	42/11.1	172	7	1	3/4–10	12
10050 PVT	10	50	4.0	200	145.0	60/15.9*	240	7	1	3/4–10	9
10050 SST	10	50	4.0	200	145.0	60/15.9*	240	7	1	3/4–10	12
10022 PVT	10	22	5.1	73	145.0	26/6.9	88	6	1	3/4–10	9
10022 SST	10	22	5.1	73	145.0	26/6.9	88	6	1	3/4–10	12
10044 PVT	10	44	5.1	143	145.0	53/14.0	172	6	1	3/4–10	9
10044 SST	10	44	5.1	143	145.0	53/14.0	172	6	1	3/4–10	12
07065 PVT	7	65	5.1	200	100.0	78/20.6*	240	6	1	3/4–10	9
07065 SST	7	65	5.1	200	100.0	78/20.6*	240	6	1	3/4–10	12
07042 PVT	7	42	9.7	73	100.0	50/13.2	88	3	1	1–15	10
07042 SST	7	42	9.7	73	100.0	50/13.2	88	3	1	1–15	14
04084 PVT	4	84	9.7	143	58.0	101/26.7	172	3	1	1–15	10
04084 SST	4	84	9.7	143	58.0	101/26.7	172	3	1	1–15	14
04120 PVT	4	120	9.7	200	58.0	144/38.0*	240	3	1	1–15	10
04120 SST	4	120	9.7	200	58.0	144/38.0*	240	3	1	1–15	14

* The 60 Hz performance data apply to the S1Ca pump types (because internal approx. 60 Hz operation), however, at max. 200 strokes/min.

Materials in contact with medium

Material	Liquid end	Suction/pressure connector	Seals/ball seat	Balls	Integrated overflow valve
PVT	PVDF	PVDF	PTFE/PTFE	Ceramic	PVDF/FPM or EPDM
SST	Stainless steel 1.4404	Stainless steel 1.4581	PTFE/PTFE	Stainless steel 1.4404	Stainless steel/FPM or EPDM

Sigma Basic Type Control Functions (S1Ba)

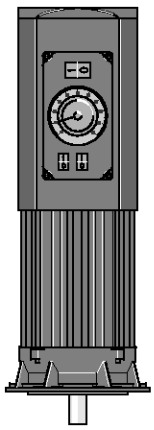

pk_2_103

Stroke length actuator/controller

Actuator for automatic stroke length adjustment, actuating period approx. 1 sec for 1 % stroke length, 1 k Ohm response signal potentiometer, enclosure rating IP 54.

Controller consists of actuator with servomotor and integrated servo control for stroke length adjustment via a standard signal. Standard signal input 0/4-20 mA, corresponds to stroke length 0 - 100 %. Automatic/ manual operation selection key for manual stroke adjustment. Mechanical status display of actual stroke length value output 0/4-20 mA for remote display.

Variable speed motors with integrated speed controller (identcode characteristic V)

Power supply 1 ph 230 V, 50/60 Hz, 0.18 kW

External control with 0/4-20 mA (see pk_2_103)

Speed Controllers see page → 2-51

Speed controllers in metal housing (identcode characteristic Z)

The speed controller assembly consists of a speed controller and a 0.09 kW variable speed motor.

Speed Controllers see page → 2-51

2.2 Sigma/ 1 Diaphragm Metering Pumps

2.2.2 Identcode Ordering System Basic Type S1Ba

Sigma Basic Type (S1Ba)

S1Ba	Drive type												
	H	Main drive, diaphragm											
		Pump type*											
			bar	l/h						bar	l/h		
			12017	12	17					07065	7	65	
			12035	12	35					07042	7	42	
			10050	10	50					04084	4	84	
			10022	10	22					04120	4	120	
			10044	10	44								
			Material Liquid end										
			PV	PVDF									
			SS	Stainless steel									
				Seal material									
				T	PTFE seal								
					Diaphragm								
					S	Multi-layer safety diaphragm with visual rupture indicator							
					A	Multilayer safety diaphragm with rupture signalling (contact)							
					H	Diaphragm for hygienic pump head (on request)							
						Liquid end version							
						0	No spring						
						1	With 2 valve springs, Hastelloy C, 0.1 bar						
						4**	With pressure relief valve, FPM seal, no valve spring						
						5**	with overflow valve, FPM seal with valve springs						
						6**	with overflow valve, EPDM seal, without valve spring						
						7**	with overflow valve, EPDM seal, with valve spring						
						H	Hygienic pump head with tri-clamp connectors (max. 10 bar) (on request)						
							Hydraulic connection						
							0	Standard					
							1	Union nut and PVC insert					
							2	Union nut and PP insert					
							3	Union nut and PVDF insert					
							4	Union nut and SS insert					
							7	Union nut and PVDF hose nozzle					
							8	Union nut and SS hose nozzle					
							9	Union nut and stainless steel hose nozzle					
								Version					
								0	With ProMinent® logo (standard)				
								1	Without ProMinent® logo				
								M	Modified				
									Electrical power supply				
									S	3 ph, 230 V/400 V 50/60 Hz, 0.09 kW			
									M	1 ph, AC, 230 V/50/60 Hz, 0.09 kW			
									N	1 ph, AC 115 V 60 Hz, 0.09 kW			
									L	3 ph, 230 V/400 V, 50 Hz, (Exe, Exd)			
									P	3 ph, 265 V/440 V, 60 Hz, (Exe, Exd)			
									R	3 ph, variable speed motor, 230/400 V, 0.09 kW			
									V (0)	Variable speed motor with integrated frequency converter 1 pH, 230 V, 50/60 Hz			
									Z	Speed control compl 1 ph 230 V, 50/60 Hz (variable speed motor + FC)			
									2	No motor, C 42 flange (NEMA)			
									3	No motor, B5 Gr. 56 (DN)			
										Enclosure rating			
										0	IP 55 (standard)		
										1	Exe motor version ATEX-T3		
										2	Exd motor version ATEX-T4		
											Stroke sensor		
											0	No stroke sensor (standard)	
											2	Pacing relay (reed relay)	
											3	Stroke sensor (Namur) for hazardous locations	
												Stroke length adjustment	
												0	Manual (standard)
												1	With stroke positioning motor, 230 V/50/60 Hz
												2	With stroke positioning motor, 115 V/60 Hz
												3	With stroke control motor, 0...20 mA 230 V/50/60 Hz
												4	With stroke control motor 4...20 mA 230 V/50/60 Hz
												5	With stroke control motor 0...20 mA 115 V/60 Hz
												6	With stroke control motor 4...20 mA 115 V/60 Hz

* Figure 1 and 2=back pressure [bar]; figure 3, 4, 5=flow rate [l/h]

** Standard with tube nozzle in the bypass. Threaded connection on request.

NEW: EHEDG-certified (European Hygienic Eng. Design Group) stainless steel metering heads are available on request.

2.2 Sigma/ 1 Diaphragm Metering Pumps

2.2.3 Identcode Ordering System Control Type S1Ca

Sigma Control Type (S1Ca)

The 60 Hz performance data apply to the S1Ca pump types, however, at max. 200 strokes/min.

| S1Ca | Drive type | | |

2.2 Sigma/ 1 Diaphragm Metering Pumps

2.2.4 Spare Parts

The replacement part kit in general includes the wear parts of the delivery units.

Scope of delivery for material PVT

1 x metering diaphragm, 1 x suction valve compl., 1 x pressure valve compl., 2 x valve balls

1 x elastomer seal kit (EPDM, FPM-B)

2 x ball seat bushing, 2 x ball washer, 4 x formed composite seal

Scope of delivery for material SST

1 x metering diaphragm, 2 x valve balls

2 x seal kit compl. (packing rings, ball seat washers)

4 x formed composite seals

Spare parts kits Sigma/ 1 for versions with multilayer safety diaphragm

NEW

(for Identcode: Type 12017, 12035, 10050)

Delivery unit	Materials in contact with medium	Order no.
FM 50 - DN 10	PVT	1035964
FM 50 - DN 10	SST	1035966
FM 50 - DN 10	SST (with 2 valve assemblies)	1035965

(for Identcode: Type 10022, 10044, 07065)

Delivery unit	Materials in contact with medium	Order no.
FM 65 - DN 10	PVT	1035967
FM 65 - DN 10	SST	1035969
FM 65 - DN 10	SST (with 2 valve assemblies)	1035968

(for Identcode: Type 07042, 04084, 04120)

Delivery unit	Materials in contact with medium	Order no.
FM 120 - DN 15	PVT	1035961
FM 120 - DN 15	SST	1035963
FM 120 - DN 15	SST (with 2 valve assemblies)	1035962

Spare parts kits Sigma/ 1 for version with old standard/double diaphragm

(for Identcode: Type 12017, 12035, 10050)

Delivery unit	Materials in contact with medium	Order no.
FM 50 - DN 10	PVT	1010541
FM 50 - DN 10	SST	1010554
FM 50 - DN 10	SST (with 2 valve assemblies)	1010555

(for Identcode: Type 10022, 10044, 07065)

Delivery unit	Materials in contact with medium	Order no.
FM 65 - DN 10	PVT	1010542
FM 65 - DN 10	SST	1010556
FM 65 - DN 10	SST (with 2 valve assemblies)	1010557

(for Identcode: Type 07042, 04084, 04120)

Delivery unit	Materials in contact with medium	Order no.
FM 120 - DN 15	PVT	1010543
FM 120 - DN 15	SST	1010558
FM 120 - DN 15	SST (with 2 valve assemblies)	1010559

2.2 Sigma/ 1 Diaphragm Metering Pumps

NEW

Multilayer safety diaphragm (standard)

	Order no.
FM 50 (type 12017; 12035; 10050)	1030114
FM 65 (type 10022; 10044; 07065)	1030115
FM 120 (type 07042; 04084; 04120)	1035828

Metering diaphragm (old version)

	Order no.
Sigma/ 1 FM 50 (12017; 12035; 10050)	1010279
Sigma/ 1 FM 65 (10022; 10044; 07065)	1010282
Sigma/ 1 FM 120 (07042; 04084; 04120)	1010285

Spare parts kit for integrated overflow valve

consisting of two Hast. C compression springs and four FPM-A and EPDM O-rings each

	For material	Seals	Order no.
ETS overflow valve 4 bar	PVT/SST	FPM-A / EPDM	1031199
ETS overflow valve 7 bar	PVT/SST	FPM-A / EPDM	1031200
ETS overflow valve 10 bar	PVT/SST	FPM-A / EPDM	1031201
ETS overflow valve 12 bar	PVT/SST	FPM-A / EPDM	1031202

Motor Data

Identcode characteristic		Voltage supply			Remarks
S	3 ph, IP 55	220-240 V/380-420 V	50 Hz	0.09 kW	
		250-280 V/440-480 V	60 Hz	0.09 kW	
M	1 ph AC, IP 55	230 V ±5%	50/60 Hz	0.12 kW	
N	1 ph AC, IP 55	115 V ±5 %	60 Hz	0.12 kW	
L1	3 ph, II2GEExellT3	220-240 V/380-420 V	50 Hz	0.12 kW	
L2	3 ph, II2GEExdIICT4	220-240 V/380-420 V	50 Hz	0.18 kW	with PTC, speed adjustment range 1:5
P1	3 ph, II2GEExellT3	250-280 V/440-480 V	60 Hz	0.12 kW	
P2	3 ph, II2GEExdIICT4	250-280 V/440-480 V	60 Hz	0.18 kW	with PTC, speed adjustment range 1:5
R	3 ph, IP 55	220-240 V/380-420 V	50 Hz	0.09 kW	with PTC, speed adjustment range 1:20 with separate fan 1ph 230 V ; 50/60Hz
V0	1 ph, IP 55	230 V ±10 %	50/60 Hz	0.18 kW	Variable speed motor with integrated frequency converter

For further information, please request motor data sheets.
Customised motors or customised motor flanges are available on request.

In compliance with the Ecodesign Directive 2005/32/EC, motors of less than 0.75 kW and motor that are designed for speed-controllable operation are not subject to the IEC2 standard.

Note concerning installation in Ex-zones:

With effect from 01.07.2003, only pumps with a suitable identification and rating plate in accordance with ATEX Directive 94/9/EC may be used in areas with potentially explosive atmospheres. The explosion group, category and degree of protection stated on the rating plate must correspond to, or be higher than, the conditions specified in the intended application.

2.3 Sigma/ 2 Diaphragm Metering Pumps

2.3.1 Sigma/ 2 Diaphragm Metering Pumps

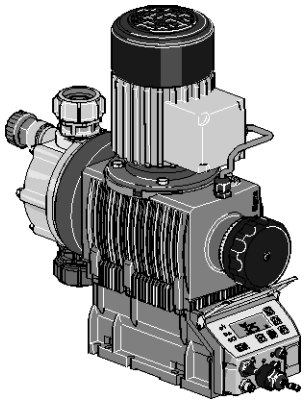

pk_2_115
Sigma/ 2

The Sigma/2 diaphragm metering pump has a high-strength inner metal housing for those component parts subjected to load as well as an additional plastic housing to protect against corrosion. The capacity ranges between 50-420 l/h at a max. backpressure of 4-16 bar. The feed rate can be adjusted by a self-locking rotary dial in 0.5 % steps via the stroke length (5 mm).

The reproducibility of the metering is better than ±2 % in the stroke length range of 30% - 100% given defined conditions and correct installation. (The notes in the operating instructions must be observed.)

The rugged, corrosion-resistant metal-plastic housing is combined with three gearbox ratios, two liquid end sizes and two liquid end materials. The Sigma control type (S2Ca) facilitates control via contact or analogue signals (e.g. 0/4-20 mA) which ensures a good adaptation, also to different metering tasks.

For safety-technical reasons, suitable overflow guards are to be installed in all motor metering pumps without integrated overload protections.

Sigma Basic Type (S2Ba)

The Sigma Basic type is a motor driven metering pump with no internal electronic control system. The S2Ba offers a variety of different drive options in both the three phase standard motor (standard: IP 55) or the single phase AC versions. We also supply metering pumps with ATEX-approval for use in EXe and EXde zones.

Different flanges are always available so that customers can use their own motor to drive the pump.

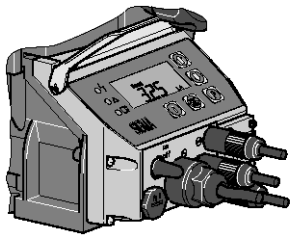

pk_2_104
Sigma Controller

Sigma Control Type (S2Ca)

The Sigma microprocessor version (standard IP 65) allows rapid and reliable adjustment to fluctuating metering requirements.

The controller has the same control panel as the gamma/ L metering pump.

The microprocessor controller of the Sigma pumps, featuring the optimum combination of variable AC frequency combined with digital stroking frequency, ensures exact metering even in the lower minimum range due to individual stroke control.

The individual pump functions are simply adjusted using the five programming keys. A backlit LCD indicates the current operating status, LEDs function as operation or fault indicators and fault indicator or pacing relays monitor the pump function.

Central or decentral adjustment is possible with PROFIBUS® and/or an integrated process timer.

Diaphragm Failure Indication (A)

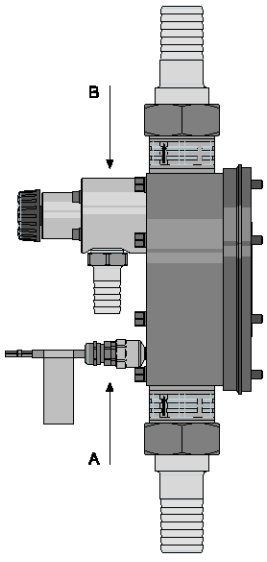

P_AC_0212_SW

The delivery unit has a patented multilayer safety diaphragm as standard and a visual diaphragm rupture indicator.

The diaphragm is coated with PTFE film on both sides, from the drive and working side. This guarantees that no leakages to the outside occur if the diaphragm ruptures. When the diaphragm ruptures, feed chemical enters between the diaphragm layers and thus triggers a mechanical indication or an alarm via the sensor area. This concepts ensures a reliable metering - even under critical operating conditions.

In connection with the S2Ca, continued metering or alternatively a stopping of the metering pump can be selected.

Integrated Relief-/Bleed Valve (B)

A liquid end variant with integrated hydraulic relief valve is optionally available for pressure ratings 4, 7, 10 and 16 bar. It protects the pump against overload and potential damage with no additional installation. This represents a considerable saving to the operator.

The integrated pressure relief valve offers the further advantage of effective bleeding of the injection valve during intake.

2.3 Sigma/ 2 Diaphragm Metering Pumps

Technical Data

Type	With motor 1500 rpm at 50 Hz				With motor 1800 rpm at 60 Hz			Suction height	Perm. admiss. pressure suction side	Connection suction/ discharge side	Shipping weight
	bar	Delivery rate at max. backpressure l/h	ml/ stroke	Max. stroke rate Strokes/ min	psi	Delivery rate at max. backpressure l/h / gph	Max. stroke rate Strokes/ min	mWC	bar	G–DN	kg
16050 PVT	10	50	11.4	73	145	60/15.9	87	7	3	1–15	15
16050 SST	16	48	11.4	73	232	57/15.1	87	7	3	1–15	20
16090 PVT	10	90	11.4	132	145	108/28.5	156	7	3	1–15	15
16090 SST	16	86	11.4	132	232	103/27.2	156	7	3	1–15	20
16130 PVT	10	130	10.9	198	145	156/41.2**	232	7	3	1–15	15
16130 SST	16	125	10.9	198	232	150/39.6**	232	7	3	1–15	20
07120 PVT	7	120	27.4	73	100	144/38.0	87	5	1	1 1/2–25*	16
07120 SST	7	120	27.4	73	100	144/38.0	87	5	1	1 1/2–25*	24
07220 PVT	7	220	27.7	132	100	264/69.7	156	5	1	1 1/2–25*	16
07220 SST	7	220	27.7	132	100	264/69.7	156	5	1	1 1/2–25*	24
04350 PVT	4	350	29.4	198	58	420/111.0**	232	5	1	1 1/2–25*	16
04350 SST	4	350	29.4	198	58	420/111.0**	232	5	1	1 1/2–25*	24

Note:

* For the Sigma types 07120, 07220 and 04350, the liquid ends are fitted with DN 25 (G 1 1/2) valves. Since DN 20 is normally large enough for the piping of these versions (see technical data, connection suction/pressure side), the connecting parts identified in the Identcode (e.g. inserts) are already reduced to DN 20, i.e. piping and accessories can be DN 20.

** The 60 Hz performance data apply to the S2Ca pump types (because internal approx. 60 Hz operation), however, at max. 200 strokes/min.

Materials in contact with medium

Material	Liquid end	Suction/pressure connector	Seals/ ball seat	Balls	Integrated overflow valve
PVT	PVDF	PVDF	PTFE/PTFE	Ceramic/glass *	PVDF/FPM or EPDM
SST	Stainless steel 1.4404	Stainless steel 1.4581	PTFE/PTFE	Stainless steel 1.4404	Stainless steel/FPM or EPDM

* for 07120, 07220, 04350

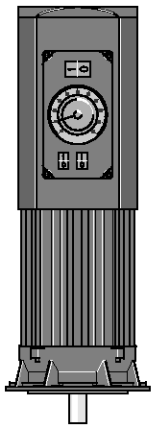

pk_2_103

Sigma Basic Type Control Functions (S2Ba)

Stroke length actuator/controller

Actuator for automatic stroke length adjustment, actuating period approx. 1 sec for 1 % stroke length, 1 k Ohm response signal potentiometer, enclosure rating IP 54.

Controller consists of actuator with servomotor and integrated servo control for stroke length adjustment via a standard signal. Standard signal input 0/4-20 mA, corresponds to stroke length 0 - 100 %. Automatic/ manual operation selection key for manual stroke adjustment. Mechanical status display of actual stroke length value output 0/4-20 mA for remote display.

Variable speed motors with integrated frequency converter (Identcode characteristic V)

Voltage supply 1 ph 230 V, 50/60 Hz, 0.37 kW

Externally controllable with 0/4-20 mA (see Fig. pg_2_103)

Speed Controllers see page → 2-51

Speed controls with frequency converter (Identcode characteristic Z)

The speed controller assembly consists of a frequency converter and a 0.37 kW variable speed motor.

Note concerning installation in Ex-zones:

With effect from 01.07.2003, only pumps with a suitable identification and rating plate in accordance with ATEX Directive 94/9/EC may be used in areas with potentially explosive atmospheres. The explosion group, category and degree of protection stated on the rating plate must correspond to, or be higher than, the conditions specified in the intended application.

Speed Controllers see page → 2-51

2.3 Sigma/ 2 Diaphragm Metering Pumps

2.3.2 Identcode Ordering System Basic Type S2Ba

Sigma Basic Type (S2Ba)

S2Ba	Drive type												
	HM	Main drive, diaphragm											
		Pump type*											
			bar	l/h					bar	l/h			
			16050	16	50				07120	7	120		
			16090	16	90				07220	7	220		
			16130	16	130				04350	4	350		
				Material Liquid end									
				PV	PVDF (max. 10 bar)								
				SS	Stainless steel								
					Seal material								
					T	PTFE seal							
						Diaphragm							
						S	Multilayer safety diaphragm with visual rupture indicator						
						A	Multilayer safety diaphragm with rupture signalling (contact)						
						H	Diaphragm for hygienic pump head (on request)						
							Liquid end version						
							0	No spring					
							1	With 2 valve springs, Hastelloy C4, 0.1 bar					
							4**	With pressure relief valve, FPM seal, no valve spring					
							5**	with overflow valve, FPM seal with valve springs					
							6**	with overflow valve, EPDM seal, without valve spring					
							7**	with overflow valve, EPDM seal, with valve spring					
							H	Hygienic pump head with tri-clamp connectors (max. 10 bar) (on request)					
								Hydraulic connection					
								0	Standard				
								1	Union nut and PVC insert				
								2	Union nut and PP insert				
								3	Union nut and PVDF insert				
								4	Union nut and SS insert				
								7	Union nut and PVDF hose nozzle				
								8	Union nut and SS hose nozzle				
								9	Union nut and stainless steel hose nozzle				
									Version				
									0	With ProMinent® logo (standard)			
									1	Without ProMinent® logo			
									M	Modified			
										Electrical power supply			
										S	3 ph, 230 V/400 V 50/60 Hz		
										M	1 ph, AC, 230 V/50/60 Hz		
										N	1 ph, AC, 115 V/50/60 Hz		
										L	3 ph, 230 V/400 V, 50 Hz, (Exe, Exd)		
										P	3 ph, 265 V/440 V, 60 Hz, (Exe, Exd)		
										R	3 ph, variable speed motor, 230/400 V		
										V (0)	Variable speed motor with integrated frequency converter 1 pH, 230 V, 50/60 Hz		
										Z	Speed control compl 1 ph 230 V, 50/60 Hz (variable speed motor + FC)		
										1	No motor, with B14 flange (Gr. 71 (DIN))		
										2	No motor, C 56 flange (NEMA)		
										3	No motor, B5 Gr. 63 (DN)		
											Enclosure rating		
											0	IP 55 (standard)	
											1	Exe motor version ATEX-T3	
											2	Exd motor version ATEX-T4	
												Stroke sensor	
												0	No stroke sensor (standard)
												2	Pacing relay (reed relay)
												3	Stroke sensor (Namur) for hazardous locations
													Stroke length adjustment
													0 Manual (standard)
													1 With stroke positioning motor, 230 V/50/60 Hz
													2 With stroke positioning motor, 115 V/50/60 Hz
													3 With stroke control motor, 0...20 mA 230 V/50/60 Hz
													4 With stroke control motor, 4...20 mA 230 V/50/60 Hz
													5 With stroke control motor, 0...20 mA 115 V/50/60 Hz
													6 With stroke control motor, 4...20 mA 115 V/50/60 Hz

* Figure 1 and 2=back pressure [bar]; figure 3, 4, 5=flow rate [l/h]

** Standard with tube nozzle in the bypass Threaded connection on request.

NEW: EHEDG-certified (European Hygienic Eng. Design Group) stainless steel metering heads are available on request.

2.3 Sigma/ 2 Diaphragm Metering Pumps

2.3.3 Identcode Ordering System Control Type S2Ca

Sigma Control Type (S2Ca)

The 60 Hz performance data apply to the S2Ca pump types, however, at max. 200 strokes/min.

| S2Ca | Drive type | | |

2.3 Sigma/ 2 Diaphragm Metering Pumps

2.3.4 Spare Parts

The replacement part kit in general includes the wear parts of the delivery units.

Scope of delivery for material PVT

1 x metering diaphragm, 1 x suction valve compl., 1 x pressure valve compl., 2 x valve balls,

1 x elastomer seal kit (EPDM, FPM-B),

2 x ball seat bushing, 2 x ball washer, 4 x formed composite seals

Scope of delivery for material SST

1 x metering diaphragm, 2 x valve balls, 2 x ball seat washers,

4 x formed composite seals

Spare parts kits Sigma/ 2 for versions with multilayer safety diaphragm

NEW

(applies to identcode types 16050, 16090, 16130, 12050, 12090 and 12130)

Delivery unit	Materials in contact with medium	Order no.
FM 130 - DN 15	PVT	1035951
FM 130 - DN 15	SST	1035957
FM 130 - DN 15	SST (mit 2 Ventilen kpl.)	1035954

(applies to identcode types 07120, 07220 and 04350)

Delivery unit	Materials in contact with medium	Order no.
FM 350 - DN 25	PVT	1035953
FM 350 - DN 25	SST	1035960
FM 350 - DN 25	SST (with 2 valve assemblies)	1035959

Spare parts kits Sigma/ 2 for version with old standard/double diaphragm

(applies to identcode types 16050, 16090, 16130, 12050, 12090 and 12130)

Delivery unit	Materials in contact with medium	Order no.
FM 130 - DN 15	PVT	740324
FM 130 - DN 15	SST	740326
FM 130 - DN 15	SST (with 2 valve sets)	740328

(applies to identcode types 07120, 07220 and 04350)

Delivery unit	Materials in contact with medium	Order no.
FM 350 - DN 25	PVT	740325
FM 350 - DN 25	SST	740327
FM 350 - DN 25	SST (with 2 valve sets)	740329

Multilayer safety diaphragm (standard)

NEW

	Order no.
FM 130 (type: 16050, 16090, 16130)	1029771
FM 350 (type: 07120, 07220, 04350)	1033422

Metering diaphragm (old version)

	Order no.
Sigma with FM 130 identcode: Type 16050, 16090, 16130	792495
Sigma with FM 350 identcode: Type 07120, 07220, 04350	792496

2.3 Sigma/ 2 Diaphragm Metering Pumps

Spare parts kit for integrated overflow valve

consisting of two Hast. C compression springs and four FPM-A and EPDM O-rings each

	For material	Seals	Order no.
ETS overflow valve 4 bar	PVT/SST	FPM-A / EPDM	1031199
ETS overflow valve 7 bar	PVT/SST	FPM-A / EPDM	1031200
ETS overflow valve 10 bar	PVT	FPM-A / EPDM	1031201
ETS overflow valve 16 bar	SST	FPM-A / EPDM	1031203

Gear oil

	Volume l	Order no.
Gear oil Mobilgear 634 VG 460	1	1004542

Motor Data

Identcode characteristic		Voltage supply			Remarks
S	3 ph, IP 55	220-240 V/380-420 V	50 Hz	0.25 kW	
		250-280 V/440-480 V	60 Hz	0.25 kW	
M	1 ph AC, IP 55	230 V ±5%	50/60 Hz	0.18 kW	
N	1 ph AC, IP 55	115 V ±5 %	60 Hz	0.18 kW	
L1	3 ph, II2GEExeIIT3	220-240 V/380-420 V	50 Hz	0.18 kW	
L2	3 ph, II2GEExdIICT4	220-240 V/380-420 V	50 Hz	0.18 kW	with PTC, speed adjustment range 1:5
P1	3 ph, II2GEExeIIT3	250-280 V/440-480 V	60 Hz	0.18 kW	
P2	3 ph, II2GEExdIICT4	250-280 V/440-480 V	60 Hz	0.21 kW	with PTC, speed adjustment range 1:5
R	3 ph, IP 55	220-240 V/380-420 V	50 Hz	0.37 kW	with PTC, speed adjustment range 1:20 with separate fan 1ph 230 V ; 50/60Hz
V0	1 ph, IP 55	230 V ±5 %	50/60 Hz	0.37 kW	Variable speed motor with integrated frequency converter

Motor data sheets can be requested for more information.

Special motors or special motor flanges are available on request.

In compliance with the Ecodesign Directive 2005/32/EC, motors of less than 0.75 kW and motor that are designed for speed-controllable operation are not subject to the IEC2 standard.

Note concerning installation in Ex-zones:

With effect from 01.07.2003, only pumps with a suitable identification and rating plate in accordance with ATEX Directive 94/9/EC may be used in areas with potentially explosive atmospheres. The explosion group, category and degree of protection stated on the rating plate must correspond to, or be higher than, the conditions specified in the intended application.

2.4 Sigma/ 3 Diaphragm Metering Pumps

2.4.1 Sigma/ 3 Diaphragm Metering Pumps

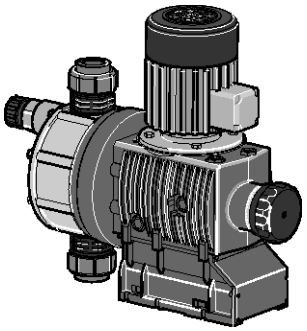

pk_2_071
Sigma/ 3

The ProMinent® Sigma/ 3 diaphragm metering pump is designed with a highly robust metal inner housing for load-stressed parts and an additional plastic housing for protection against corrosion. The capacity range extends from 145-1030 l/h at a max. backpressure of 12-4 bar. The feed rate is adjustable by altering the stroke length (6 mm) in 0.5 % increments by means of a self-locking rotating knob.

Under defined conditions and when installed correctly, the reproducibility of the metering is better than ±2 % at a stroke length of between 30 % and 100 % (instructions in the operating instructions manual must be followed).

The stable, corrosion-resistant metal and plastic housing is combined with four gear ratios, two liquid end sizes and two liquid end materials. The optional control via switch or analogue signal (e.g. 0/4-20 mA) for the Sigma (S3Ca) controller type means that the pump is highly adaptable, even to fluctuating metering requirements.

In all motor-driven metering pumps without integrated overload protection, for safety reasons, suitable overload protection must be provided during installation.

Sigma/ 3 Basic Type (S3Ba)

The ProMinent® Sigma/ 3 basic type is a motor-driven metering pump without internal electronics. The ProMinent® S3Ba offers a variety of different power variations, from the standard three phase motor (standard IP 55) or the single phase AC motors. We also supply metering pumps with ATEX-approval for use in EXe and EXde zones.

Different flange versions are available at any one time and allow the customer to use their own motors to drive the pumps.

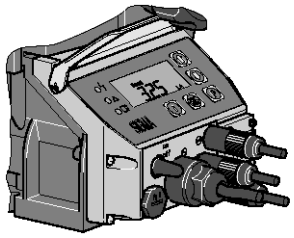

pk_2_104
Sigma Controller

Sigma/ 3 Control Type (S3Ca)

The ProMinent® Sigma/ 3 microprocessor version (standard IP 65) allows rapid and reliable adjustment to fluctuating metering requirements.

The control unit has the same control surface as the ProMinent® gamma/ L metering pump.

The microprocessor controller of the Sigma pumps, featuring the optimum combination of variable AC frequency combined with digital stroking frequency, ensures exact metering even in the lower minimum range due to individual stroke control.

With five programming keys the individual pump functions are easy to set. A backlit LCD gives information about the prevailing operating status. LEDs along with a fault-indicating or pacing relay act as operating and warning indicators to ensure monitoring of the pump function.

Central or decentral adjustmentis possible with PROFIBUS® nd/or an integrated process timer.

Diaphragm Rupture Signaling (A)

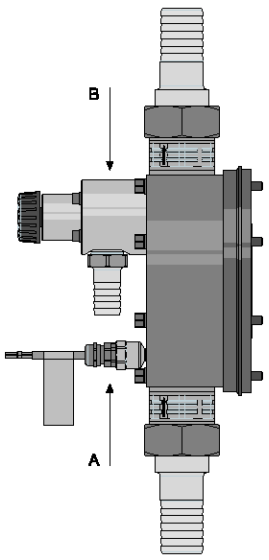

P_AC_0212_SW

The delivery unit has a patented multilayer safety diaphragm as standard and a visual diaphragm rupture indicator.

The diaphragm is coated with PTFE film on both sides, from the drive and working side. This guarantees that no leakages to the outside occur if the diaphragm ruptures. When the diaphragm ruptures, feed chemical enters between the diaphragm layers and thus triggers a mechanical indication or an alarm via the sensor area. This concepts ensures a reliable metering - even under critical operating conditions.

In connection with the S3Ca, continued metering or alternatively a stopping of the metering pump can be selected.

Integrated overflow/bleed valve (B)

A liquid end variant with integrated hydraulic relief valve is optionally available for pressure ratings 4, 7, 10 and 12 bar. The metering pump is protected against overload and the possible resultant damage without costly additional installation, representing considerable cost savings to the operator.

The integrated bypass valve offers the added advantage of being a simple means of venting air from the metering pump during the suction process.

2.4 Sigma/ 3 Diaphragm Metering Pumps

Technical Data

Type	With motor 1500 rpm at 50 Hz				With motor 1800 rpm at 60 Hz			Perm. admiss. pressure suction side	Suction height	Connec-tion, suction/ pressure side	Shipping weight
		Delivery rate at max. backpressure		Max. stroke rate		Delivery rate at max. backpressure	Max. stroke rate				
	bar	l/h	ml/ stroke	Strokes/ min	psi	l/h / gph	Strokes/ min	bar	mWC	G–DN	kg
120145 PVT	10	145	31.5	72	145	174/46.0	86	2	5	1 1/2–25	22
120145 SST	12	145	31.5	72	174	174/46.0	86	2	5	1 1/2–25	26
120190 PVT	10	190	31.5	103	145	228/60.2	124	2	5	1 1/2–25	22
120190 SST	12	190	31.5	103	174	228/60.2	124	2	5	1 1/2–25	26
120270 PVT	10	270	31.5	144	145	324/85.6	173	2	5	1 1/2–25	22
120270 SST	12	270	31.5	144	174	324/85.6	173	2	5	1 1/2–25	26
120330 PVT*	10	330	31.5	180	145		–	2	5	1 1/2–25	22
120330 SST*	12	330	31.5	180	174		–	2	5	1 1/2–25	26
070410 PVT	7	410	95.1	72	100	492/130.0	86	1	4	2–32	24
070410 SST	7	410	95.1	72	100	492/130.0	86	1	4	2–32	29
070580 PVT	7	580	95.1	103	100	696/183.9	124	1	4	2–32	24
070580 SST	7	580	95.1	103	100	696/183.9	124	1	4	2–32	29
040830 PVT	4	830	95.1	144	58	1,000/264.2	173	1	3	2–32	24
040830 SST	4	830	95.1	144	58	1,000/264.2	173	1	3	2–32	29
041030 PVT*	4	1,030	95.1	180	58		–	1	3	2–32	24
041030 SST*	4	1,030	95.1	180	58		–	1	3	2–32	29

* Available for S3Ba only

60 Hz performance data apply for S3Ca pump types (due to internal approx. 60 Hz operation).

Materials in contact with medium

		DN 25 ball valves			DN 32 plate valves			
Material	Suction/pressure connector Liquid end	Seals	Valve balls	Valve seats	Seals	Valve plates/valve spring	Valve seats	Integrated overflow valve
PVT	PVDF	PTFE	Glass	PTFE	PTFE	Ceramic/ Hast C. + CTFE**	PTFE	PVDF/FPM or EPDM
SST	Stainless steel 1.4581	PTFE	Stainless steel 1.4404	PTFE	PTFE	Stainless steel 1.4404/Hast. C	PTFE	Stainless steel/FPM or EPDM

** The valve spring is coated with CTFE (resistant similar to PTFE)

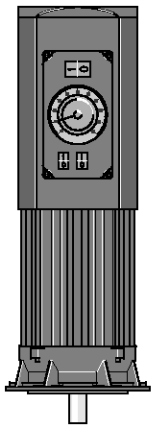

pk_2_103

Sigma Basic Type Control Functions (S3Ba)

Stroke length actuator/controller

Actuatorwith stroke positioning motor for automatic stroke length adjustment. Setting time approx. 1 sec for 1 % stroke length. Resistance potentiometer 1 k Ohm. Enclosure rating IP 54.

Controller consisting of actuator with stroke positioning motor and in-built follower for stroke length adjustment via a standard signal. Standard signal current input 0/4-20 mA, corresponds to stroke length 0 - 100 %. Can be switched between manual and automatic operation, key switch for stroke adjustment for manual operation. Mechanical status display of actual stroke length value output 0/4-20 mA for remote display.

Variable speed motors with integrated speed controller (identcode characteristic V)

Power supply 1 ph 230 V, 50/60 Hz, 0.55 kW.

External control with 0/4-20 mA (see pk_2_103)

Speed Controllers see page → 2-51

Speed controllers in metal housing (identcode characteristic Z)

The speed controller assembly consists of a speed controller and a 0.55 kW variable speed motor.

Speed Controllers see page → 2-51

2.4 Sigma/ 3 Diaphragm Metering Pumps

2.4.2 Identcode Ordering System Basic Type S3Ba

Sigma Basic Type (S3Ba)

S3Ba	Drive type												
	H	Main drive, diaphragm											
		Pump type*											
			bar	l/h					bar	l/h			
		120145	12	145				070410	7	410			
		120190	12	190				070580	7	580			
		120270	12	270				040830	4	830			
		120330	12	330				041030	4	1,030			
			Material Liquid end										
			PV	PVDF (max. 10 bar)									
			SS	Stainless steel									
				Seals material									
				T	PTFE seal								
					Diaphragm								
					S	Multilayer safety diaphragm with visual rupture indicator							
					A	Multilayer safety diaphragm with rupture signalling (contact)							
					H	Diaphragm for hygienic pump head (on request)							
						Liquid end version							
						0	No valve springs						
						1	With 2 valve springs, Hastelloy C 4; 0.1 bar (standard for DN 32)						
						4	With bypass valve, FPM seal, no valve springs						
						5	with overflow valve, FPM seal with valve springs (standard at DN 32)						
						6	with overflow valve, EPDM seal, without valve spring						
						7	with overflow valve, EPDM seal, with valve springs (standard at DN 32)						
						H	Hygienic pump head with tri-clamp connectors (max. 10 bar) (on request)						
							Hydraulic connection						
							0	Standard threaded connector (as technical data)					
							1	Union nut and PVC insert					
							2	Union nut and PP insert					
							3	Union nut and PVDF insert					
							4	Union nut and SS insert					
							7	Union nut and PVDF hose nozzle					
							8	Union nut and SS hose nozzle					
							9	Union nut and stainless steel hose nozzle					
								Version					
								0	With ProMinent® logo				
								1	Without ProMinent® logo				
								M	Modified				
									Electrical power supply				
									S	3 ph, 230 V/400 V			
									M	1 ph, 230 V			
									N	1 ph, 115 V			
									L	3 ph, 230 V/400 V, 0.37 kW, 50 Hz, (Exe, Exd)			
									P	3 ph, 265 V/440 V, 0.37 kW, 60 Hz, (Exe, Exd)			
									R	Variable speed stroke control motor, 3 ph, 230 V/400 V			
									V (0)	Variable speed motor with integrated frequency converter			
									V (2)	Variable speed motor with integr. FC Exd (delivery with frame)			
									Z	Speed control compl 1 ph 230 V//400 V (variable speed motor + FC)			
									1	No motor, with B 5 flange, size 80 (DIN)			
									2	No motor, with C 56 flange, (NEMA)			
									3	No motor, B 5 flange, size 71 (DIN)			
										Enclosure rating			
										0	IP 55		
										1	Exe motor version ATEX-T3		
										2	Exd motor version ATEX-T4		
											Stroke sensor		
											0	No stroke sensor (standard)	
											2	Pacing relay (read relay)	
											3	Stroke sensor (Namur) for explosion-proof appli.	
												Stroke length adjustment	
												0	Manual (standard)
												1	With stroke positioning motor, 230 V/50/60 Hz
												2	With stroke positioning motor, 115 V/50/60 Hz
												3	With stroke control motor 0...20 mA 230 V/50/60 Hz
												4	With stroke control motor 4...20 mA 230 V/50/60 Hz
												5	With stroke control motor 0...20 mA 115 V/50/60 Hz
												6	With stroke control motor 4...20 mA 115 V/50/60 Hz

* Figure 1 and 2=back pressure [bar]; figure 3, 4, 5=capacity [l/h]

NEW: EHEDG-certified (European Hygienic Eng. Design Group) stainless steel metering heads are available on request.

2.4 Sigma/ 3 Diaphragm Metering Pumps

2.4.3 Identcode Ordering System Control Type S3Ca

Sigma/ Control Type (S3Ca)

The 60 Hz performance data apply to S3Ca pump types.

| S3Ca | Drive type | | |

2.4 Sigma/ 3 Diaphragm Metering Pumps

2.4.4 Spare Parts

The replacement part kit in general includes the wear parts of the liquid ends.

Scope of delivery for material PVT

1 x metering diaphragm, 1 x suction valve compl., 1 x pressure valve compl., 2 x valve balls or valve plate with spring for DN 32, 1 x elastomer seal set (EPDM, FPM-B),

2 x ball seat bushing, 2 x ball seat washer

4 x formed composite seals

Scope of delivery for material SST

1 x metering diaphragm, 2 x valve balls or valve plate with spring for DN 32,

2 x ball seat washers,

4 x formed composite seals

Spare parts kits Sigma/ 3 for version with multilayer safety diaphragm

NEW

(for Identcode: type 120145, 120190, 120270, 120330)

Delivery unit	Materials in contact with medium	Order no.
FM 330 - DN 25	PVT	1034678
FM 330 - DN 25	SST	1034679
FM 330 - DN 25	SST (with 2 valves compl.)	1034680

(for Identcode: type 070410, 070580, 040830, 041030)

Delivery unit	Materials in contact with medium	Order no.
FM 1000 - DN 32	PVT/PPT/PCT	1034681
FM 1000 - DN 32	SST	1034682
FM 1000 - DN 32	SST (with 2 valves compl.)	1034683

Spare parts kits Sigma/ 3 for version with old standard/double diaphragm

(Applies to identcode: Type 120145, 120190, 120270, 120330)

Delivery unit	Materials in contact with medium	Order no.
FM 330 - DN 25	PVT	1005308
FM 330 - DN 25	SST	1005310
FM 330 - DN 25	SST (with 2 valve set)	1005312

(Applies to identcode: Type 070410, 070580, 040830, 041030)

Delivery unit	Materials in contact with medium	Order no.
FM 1000 - DN 32	PVT/PPT/PCT	1020032
FM 1000 - DN 32	SST	1005311
FM 1000 - DN 32	SST (with 2 valve set)	1005313

Multilayer safety diaphragm (standard)

NEW

	Order no.
FM 330 Identcode: type 120145, 120190, 120270, 120330	1029604
FM 1000 Identcode: type 070410, 070580, 040830, 041030	1029603

Metering diaphragm (old version)

	Order no.
FM 330 Identcode: Type 120145, 120190, 120270, 120330	1004604
FM 1000 Identcode: Type 070410, 070580, 040830, 041030	1002835

2.4 Sigma/ 3 Diaphragm Metering Pumps

Spare parts kit for integrated overflow valve

consisting of two Hast. C compression springs and four FPM-A O-rings each

	for material	Seals	Order no.
ETS overflow valve 4 bar	PVA/SSA	FPM-A / EPDM	1031204
ETS overflow valve 7 bar	PVA/SSA	FPM-A / EPDM	1031205
ETS overflow valve 10 bar	PVA	FPM-A / EPDM	1031201
ETS overflow valve 12 bar	SSA	FPM-A / EPDM	1031202

Gear oil

	Volume l	Order no.
Gear oil Mobilgear 634 VG 460	1	1004542

Motor Data

Identcode specification		Voltage supply			Remarks
S	3 ph, IP 55	220-240 V/380-420 V	50 Hz	0.37 kW	
		250-280 V/440-480 V	60 Hz	0.37 kW	
M	1 ph AC, IP 55	230 V ±5%	50/60 Hz	0.55 kW	
N	1 ph AC, IP 55	115 V ±5 %	60 Hz	0.55 kW	
L1	3 ph, II2GEExeIIT3	220-240 V/380-420 V	50 Hz	0.37 kW	
L2	3 ph, II2GEExdIICT4	220-240 V/380-420 V	50 Hz	0.37 kW	with PTC, speed adjustment range 1:5
P1	3 ph, II2GEExeIIT3	250-280 V/440-480 V	60 Hz	0.37 kW	
P2	3 ph, II2GEExdIICT4	250-280 V/440-480 V	60 Hz	0.37 kW	with PTC, speed adjustment range 1:5
R	3 ph, IP 55	220-240 V/380-420 V	50 Hz	0.55 kW	with PTC, speed adjustment range 1:20 with separate fan 1ph 230 V; 50/60Hz
V0	1 ph, IP 55	230 V ±5 %	50/60 Hz	0.55 kW	Variable speed motor with integrated frequency inverter
V2	3 ph, II2GEExdIICT4	400 V ±10 %	50/60 Hz	0.55 kW	Ex-variable speed motor with integrated frequency converter. Mains feed: 3 ph + neutral + earth

Motor data sheets can be requested for more information.

Special motors or special motor flanges are available on request.

In compliance with the Ecodesign Directive 2005/32/EC, motors of less than 0.75 kW and motor that are designed for speed-controllable operation are not subject to the IEC2 standard.

Note concerning installation in Ex-zones:

With effect from 01.07.2003, only pumps with a suitable identification and rating plate in accordance with ATEX Directive 94/9/EC may be used in areas with potentially explosive atmospheres. The explosion group, category and degree of protection stated on the rating plate must correspond to, or be higher than, the conditions specified in the intended application.

2.5 Hydraulic/Mechanical Accessories

2.5.1 Foot Valves

For connection of discharge line to metering system; the injection valves are fitted with ball checks and a Hastelloy C spring (0.5 bar priming pressure), and can be mounted as required. Used to create pressure and to prevent return flow. Materials as in pump liquid ends. Union nuts, hose sleeves and seals are included with DN 10 and DN 15 injection valves.

Important: Injection valves are not intended as completely sealed units.

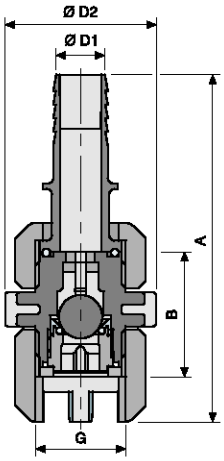

P_AC_0206_SW

PPE foot valve

PP housing, EPDM seals, spring loaded with ball check.

	G	B	Ø D2	A	Ø D1	Order no.
		mm	mm	mm	mm	
DN 10*	3/4	59	40	101	16	809465
DN 15*	1	66	47	142	20	924516
DN 20	1 1/4	77	55	–	–	803721
DN 25	1 1/2	84	60	–	–	803722
DN 32**	2	98	74	–	–	1006434
DN 40	2 1/4	113	90	–	–	1004204

* with union nut and nozzle

** PVDF/Teflon version

PCB foot valve

PVC housing, FPM seals spring loaded with ball check.

	G	B	Ø D2	A	Ø D1	Order no.
		mm	mm	mm	mm	
DN 10*	3/4	59	40	101	16	809464
DN 15*	1	66	47	142	20	924515
DN 20	1 1/4	77	55	–	–	803723
DN 25	1 1/2	84	60	–	–	803724
DN 32**	2	98	74	–	–	1006434
DN 40	2 1/4	113	90	–	–	1004193

* with union nut and nozzle

** PVDF/Teflon version

PVT foot valve

PVDF housing, PTFE seals with strainer and ball check.

	G	B	Ø D2	A	Ø D1	Order no.
		mm	mm	mm	mm	
DN 10*	3/4	58	36	92	16	1029471
DN 15*	1	64	48	131	20	1029472
DN 20	1 1/4	78	58	–	–	1029473
DN 25	1 1/2	81	65	–	–	1029474
DN 32	2	98	74	–	–	1006434
DN 40	2 1/4	108	83	–	–	1029475

* with union nut and nozzle

2.5 Hydraulic/Mechanical Accessories

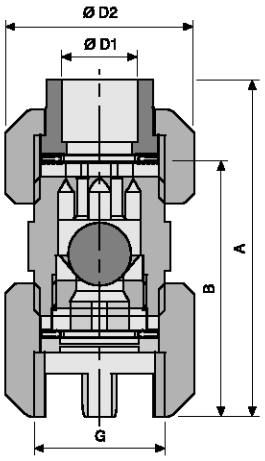

P_AC_0202_SW

TT foot valve

PTFE housing, PTFE seals spring loaded with ball check

	G	B mm	Ø D2 mm	A mm	Ø D1 mm	Order no.
DN 10*	3/4	59	40	101	16	809466
DN 15*	1	66	47	142	20	924517
DN 20	1 1/4	81	57	–	–	803725
DN 25	1 1/2	86	64	–	–	803726
DN 32**	2	98	74	–	–	1006434
DN 40	2 1/4	116	89	–	–	1004205

* with union nut and insert

** PVDF/Teflon version

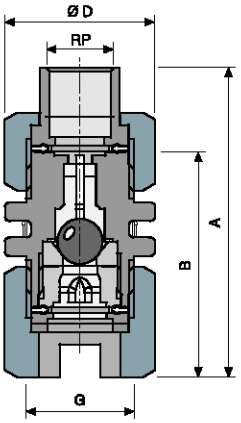

P_AC_0204_SW

SS foot valve

SS housing, PTFE seals spring loaded with ball check (1.4571/1.4581).

	G	A mm	B mm	Rp	Ø D mm	Order no.
DN 10*	3/4	75	56	3/8	37	809467
DN 15*	1	83	59	1/2	48	924518
DN 20	1 1/4	–	73	–	55	803727
DN 25	1 1/2	–	82	–	63	803728
DN 32	2	–	92	–	75	1006435
DN 40	2 1/4	–	109	–	90	1004206

* with union nut and insert

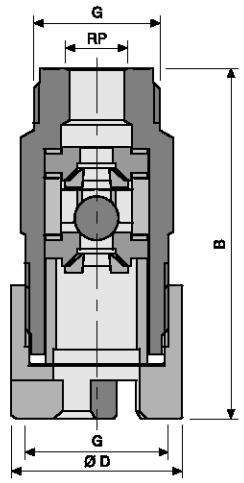

P_AC_0205_SW

Foot valve SS for high pressure pumps

	G	B mm	Rp	Ø D mm	Order no.
DN 10	3/4	70	1/4	41	803730
DN 10	3/4	70	3/8	41	803731

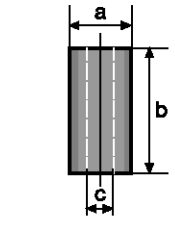

pk_1_082

Ceramic weight for vertical alignment

	Ø A mm	B mm	Ø C mm	Weight g	Order no.
Size 3	40	50	24	70	1030189

2.5 Hydraulic/Mechanical Accessories

2.5.2 Injection Valves

For connecting the metering line to the metering station; the metering valves consist of a non-return ball valve and a Hastelloy C spring (0.5 bar prepressure) and can be installed in any position. Used for generating pressure and preventing backflow. Materials matching those in the pump delivery units. Metering valves size DN 10 and 15 come with the required union nut and insert/hose socket.

Important: Metering valves are not suitable for use as tight-sealing shut-off elements.

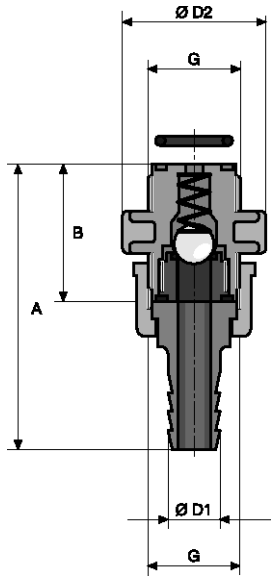

pk_2_029

PPE injection valve

PP housing, EPDM seals, spring loaded with ball check. (Priming pressure approx.0.5 bar)

Operating range

25 °C - max. operating pressure 16 bar

50 °C - max. operating pressure 9 bar

	G	B mm	Ø D2 mm	A mm	Ø D1 mm	Order no.
DN 10*	3/4	41	40	83	16	809461
DN 15*	1	43	47	108	20	924521
DN 20	1 1/4	55	55	–	–	803710
DN 25	1 1/2	60	58	–	–	803711
DN 32**	2	68	70	–	–	1002783
DN 40	2 1/4	85	84	–	–	804761

* with union nut and nozzle

** PVDF/Teflon version

PCB injection valve

PVC housing, FPM seals spring loaded with ball check. (Priming pressure approx. 0.5 bar)

Operating range

25 °C - max. operating pressure 16 bar
45 °C - max. operating pressure 7 bar

	G	B mm	Ø D2 mm	A mm	Ø D1 mm	Order no.
DN 10*	3/4	41	40	83	16	809460
DN 15*	1	43	47	108	20	924520
DN 20	1 1/4	55	55	–	–	803712
DN 25	1 1/2	60	58	–	–	803713
DN 32**	2	68	70	–	–	1002783
DN 40	2 1/4	85	84	–	–	804760

* with union nut and nozzle

** PVDF/Teflon version

PVT injection valve

PVDF housing, PTFE seals with spring-loaded non-return ball (primary pressure approx. 0.5 bar).

Operating range

25 °C - max. operating pressure 16 bar
65 °C - max. operating pressure 10 bar

	G	B mm	Ø D2 mm	A mm	Ø D1 mm	Order no.
DN 10*	3/4	40	36	84	16	1029476
DN 15*	1	43	48	110	20	1029477
DN 20	1 1/4	55	52	–	–	1029478
DN 25	1 1/2	61	56	–	–	1029479
DN 32**	2	68	70	–	–	1002783
DN 40	2 1/4	85	81	–	–	1029480

* with union nut and nozzle

2.5 Hydraulic/Mechanical Accessories

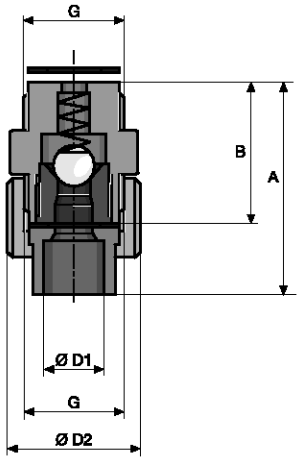

pk_2_030

TT injection valve

PTFE housing, PTFE seals spring loaded with ball check. (Priming pressure approx. 0.5 bar)

Operating range

25 °C - max. operating pressure 10 bar

90 °C - max. operating pressure 5 bar

	G	B	Ø D2	A	Ø D1	Order no.
		mm	mm	mm	mm	
DN 10*	3/4	38	36	57	16	809462
DN 15*	1	43	48	63	20	924522
DN 20	1 1/4	55	50	–	–	803714
DN 25	1 1/2	60	58	–	–	803715
DN 32**	2	68	70	–	–	1002783
DN 40	2 1/4	85	84	–	–	804762

* with union nut and insert

** PVDF/Teflon version

SS injection valve

SS housing, PTFE seals with spring-loaded ball check (1.4571/1.4581), pre- pressure approx. 0.5 bar. Continuous operating temperature up to 90 °C.

	G	Max. Pressure	B	Ø D2	A	Ø D1	Order no.
		bar	mm	mm	mm		
DN 10*	3/4	320	38	36	55	3/8	809463
DN 15*	1	240	43	48	63	1/2	924523
DN 20	1 1/4	130	55	55	–		803716
DN 25	1 1/2	70	60	58	–		803717
DN 32	2	45	69	68	–		1002801
DN 40	2 1/4	25	85	84	–		804763

* with union nut and insert

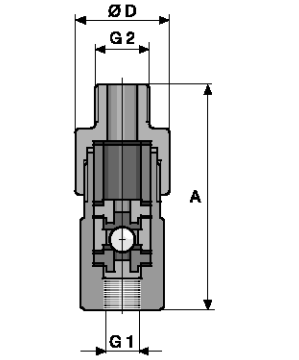

pk_2_028

SS Injection valve for Sigma/Meta/Makro TZ-HK

Housing and valve spring made of 1.4571, ball made of 1.4401, PTFE seals, priming pressure approx. 0.1 bar. Continuous operating temperature up to 90 °C.

	Max. Pressure	G1	G2	Ø D	A	Order no.
	bar			mm	mm	
DN 8	320	Rp 1/4	Rp 1/2	42	85	803732
DN 10	190	Rp 3/8	Rp 1/2	42	90	803733

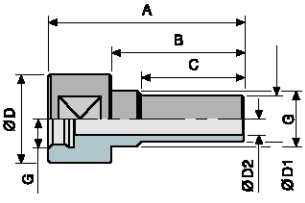

P_AC_0201_SW

Metering valve adapter PVDF

G	B	C	A	Ø D	Ø D1	Ø D2	Order no.
	mm	m	mm	mm	mm	mm	
3/4	63	49	93	42	22	15	1022052
1	65	50	95	47	27	18	1022053
1 1/4	119	104	93	56	27	18	1030508
1 1/2	135	118	171	64	31	20	1030509

2.5 Hydraulic/Mechanical Accessories

2.5.3 Pressure Relief Valves/Overflow Valves

Back pressure valves of the DHV-U series can be used universally and are back-pressure free piston diaphragm valves with an internal flow. They can be used to generate a constant back pressure, used as relief valves and be assembled anywhere in the pipework system.

Back pressure valves act to generate a constant back pressure for precise chemical feed, and/or to protect against overdosing with a free outlet, fluctuating back pressure or to dose into a vacuum. They can also be used in conjunction with pulsation dampers for low pulsation metering.

Relief valves are installed in the bypass to protect pumps, pipework and fittings from excess pressure as a result of operational errors or blockages. In the event of a malfunction, the pump conveys in a loop or back into the storage tank.

Important: Back pressure valves cannot be used as absolutely leak-tight shut-off devices. All relevant safety precautions must be taken when using with hazardous chemicals.

Important: Appropriate safety measures should be implemented when used as relief valves in conjunction with agglutinative media (e. g. milk of lime). (for instance flushing after activation)

Back Pressure Valve / Relief Valve Type DHV-U

Adjustable pressure 0.5 – 10 bar

Areas of application of PPE / PPB / PCE / PCB

20 °C - max. operating pressure 10 bar

Area of application of PVB

30 °C - max. operating pressure 10 bar

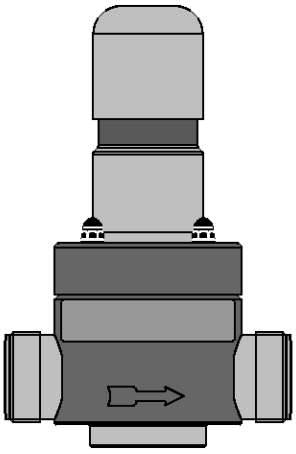

P_MOZ_0004_SW

Type	Nominal diameter	Order no.
PPE	DN 10	1037285
PPE	DN 15	1036816
PPE	DN 20	1037284
PPE	DN 25	1036633
PPB	DN 10	1038133
PPB	DN 15	1038145
PPB	DN 20	1038147
PPB	DN 25	1038149
PCE	DN 10	1038144
PCE	DN 15	1038146
PCE	DN 20	1038148
PCE	DN 25	1038150
PCB	DN 10	1037765
PCB	DN 15	1037764
PCB	DN 20	1037775
PCB	DN 25	1037774
PVB	DN 10	1037767
PVB	DN 15	1037766
PVB	DN 20	1037777
PVB	DN 25	1037776

Materials

Type	Housing/Connectors	Plungers	Plunger Seal	Seal/Connectors
PPE	PP	PVDF	EPDM	EPDM
PPB	PP	PVDF	FKM	FKM
PCE	PVC	PVDF	EPDM	EPDM
PCB	PVC	PVDF	FKM	FKM
PVB	PVDF	PVDF	FKM	FKM

2.5 Hydraulic/Mechanical Accessories

Back Pressure Valve / Relief Valve Type DHV-RM

Adjustable pressure 0.5 – 10 bar

Areas of application of PPE / PCB

20 °C - max. operating pressure 10 bar

Areas of application of PVT / TT / SS

30 °C - max. operating pressure 10 bar

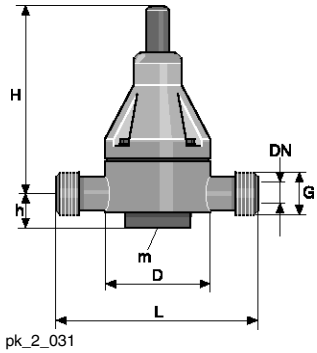

pk_2_031

Type	G	Nominal diameter	Order no.
PPE	2	DN 32	1000035
PPE	2 1/4	DN 40	1000036
PCB*	2	DN 32	1000051
PCB*	2 1/4	DN 40	1000052
PVT	2	DN 32	1000057
PVT	2 1/4	DN 40	1000058
TT	3/4	DN 10	1000059
TT	1	DN 15	1000060
TT1	1 1/4	DN 20	1000061
TT1	1 1/2	DN 25	1000062
TT1	2	DN 32	1000063
TT1	2 1/4	DN 40	1000064
SS1	3/4	DN 10	1000065
SS1	1	DN 15	1000066
SS1	1 1/4	DN 20	1000067
SS1	1 1/2	DN 25	1000068
SS1	2	DN 32	1000069
SS1	2 1/4	DN 40	1000070

*** Caution:** The product contains adhesive joints with Tangit. Please note the resistance of the Tangit adhesive.

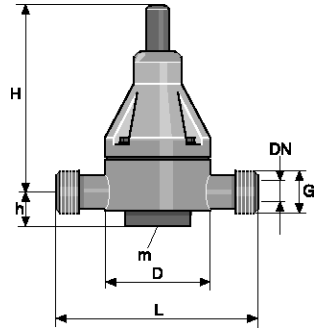

pk_2_031

DHV-RM

DN	G	H mm	L mm	h mm	D mm	m
10	3/4	175*	120*	25** / 20***	81	M6
15	1	175*	120*	25** / 20***	81	M6
20	1 1/4	202*	150*	38** / 25***	107	M6
25	1 1/2	202*	150*	38** / 25***	107	M6
32	2	260*	205*	59** / 37***	147	M8
40	2 1/4	260*	205*	59** / 37***	147	M8

*= approx. values;

** = PP, PVC, PVDF;

*** = TT, SS

Materials

Type	Housing/Connectors	Plungers	Plunger Seal	Seal/Connectors
PPE	PP	PP	EPDM	EPDM
PVT	PVDF	PTFE[2]	PTFE[3]	FPM
TT1	PTFE with carbon	PTFE[2]	PTFE[3]	PTFE[3]
SS1	1.4571	PTFE[2]	PTFE[3]	PTFE[3]

[2] PTFE (white)

[3] Packing ring PTFE/FPM

2.5 Hydraulic/Mechanical Accessories

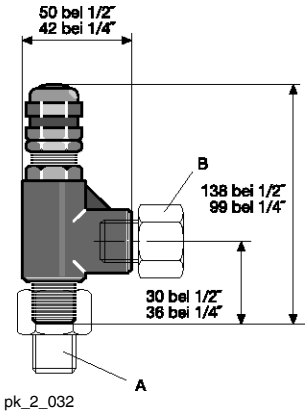

pk_2_032

Pressure relief valve/overflow valve for high pressure applications

Use as a pressure relief valve (adjustable) and as a back pressure valve. Overflow valve and corresponding spring must be ordered separately.

Material: stainless steel 316/FPM

Temperature range: -18 °C to 120 °C

Recommended use up to 200 l/h

	Connection	Order no.
Overflow valve	1/4″ NPT inner and outer thread	202505

Spring for pressure range	Spring colour	Order no.
3.4 – 24 bar	blue	202519
24.0 – 52 bar	yellow	202520
52.0 – 103 bar	violet	202525
103.0 – 155 bar	orange	202524
155.0 – 207 bar	brown	202523
207.0 – 276 bar	white	202522
276.0 – 345 bar	red	202521

Recommended use up to 300 l/h

	Connection	Order no.
Overflow valve	1/2″ NPT inner and outer thread	1005499

Spring for pressure range	Spring colour	Order no.
3.4 – 24 bar	blue	1005500
24.0 – 50 bar	yellow	1005501
50.0 – 100 bar	violet	1005502

Reducing pipe nipple

Connection	Order no.
1/4″ NPT inner - 1/4 K outer (A)	359378
1/4″ NPT outer - 1/4 inner (B)	359379
1/2″ NPT inner - 1/2 K outer (A)	1005503
1/2″ NPT outer - 1/2 inner (B)	1005504

2.5 Hydraulic/Mechanical Accessories

2.5.4 Suction Assembly

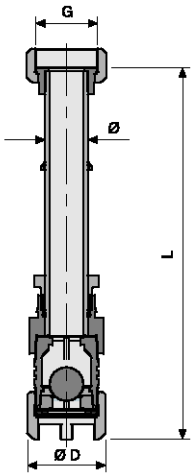

P_AC_0203_SW

Suction assembly PPE for 1000 l container

Connection	G	Ø mm	Ø D mm	L mm	Order no.
DN 10	3/4	20	47	1,340*	790389
DN 15	1	20	47	1,320*	790394
DN 20	1 1/4	25	55	1,345*	790395
DN 25	1 1/2	32	60	1,315*	790396
DN 32	2	40	74	1,170*	1005524

* The length L can be adapted (shortened) on site by the customer.

Suction assembly PCB for 1,000 l container*

Connection	G	Ø mm	Ø D mm	L mm	Order no.
DN 10	3/4	20	47	1,340**	790387
DN 15	1	20	47	1,320**	790391
DN 20	1 1/4	25	55	1,345**	790392
DN 25	1 1/2	32	60	1,315**	790393
DN 32	2	40	74	1,170**	1005525

*** Caution:** The product contains adhesive joints with Tangit. Please note the resistance of the Tangit adhesive.

** The length L can be adapted (cut) by the customer.

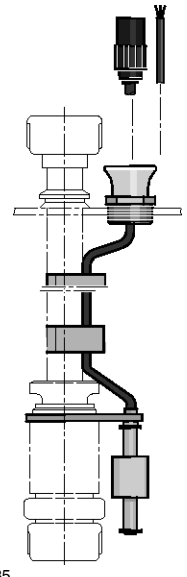
pk_2_035

Level switch kit compl. PVDF two-phase

The level switch kit can be ordered together with the suction fittings DN 10 - DN 32.

For level monitoring in the storage tank, two-phase with pre-alarm alarm signalling and deactivation of the metering pump after a further level decrease of 30 mm.

Technical data:

Max. switching voltage: 100 V

Switching current: 0.5 A

Switching capacity: 5 W/5 VA

Temperature range: - 10 °C to 65 °C

IP rating: IP 67

Switching mode: for level shortage 2 x NC

Material:

Body level switch PVDF, float PE, mounting strap PVDF, cable bracket PE, anti-kink device PE, cable PE.

Connection	Type	Cable length m	Order no.
DN10/15	with 3P round plug	3	1034879
DN 20	with 3 pin round plug	3	1005618
DN 25	with 3 pin round plug	3	1005619
DN 32	with 3 pin round plug	3	1005620
DN 10/DN 15	with lead	5	1005621
DN 20	with lead	5	790319
DN 25	with lead	5	790320
DN 32	with lead	5	1005527

2.5 Hydraulic/Mechanical Accessories

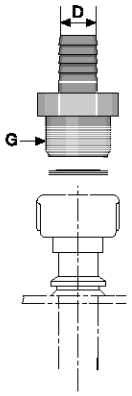

pk_2_140

Intake fitting – hose connection kit

Consisting of PVDF threaded socket and a PTFE-formed composite seal.

Connection	G	Material	Ø D mm	Order no.
DN 10	3/4	PVDF	16	1029486
DN 15	1	PVDF	20	1029487
DN 20	1 1/4	PVDF	25	1029488
DN 25	1 1/2	PVDF	32	1029489
DN 32	2	PVDF	40	1029490

2.5.5 Fittings

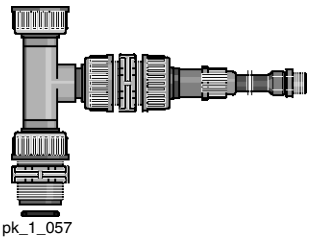

pk_1_057

Flushing device

Flushing assemblies for flushing and cleaning liquid end, metering line and metering valve as well as for preventing deposits.

PPE flushing device

Connection	G	Order no.
DN 10	3/4	809917
DN 15	1	809919
DN 20	1 1/4	809921
DN 25	1 1/2	809923

Other sizes on request.

Flushing device PCB*

Connection	G	Order no.
DN 10	3/4	809926
DN 15	1	803960
DN 20	1 1/4	803961
DN 25	1 1/2	803962
DN 40	2 1/4	803963

Other sizes and flushing device automatic for fully automatic flushing of the pump head on request.

*** Caution:** The product contains adhesive joints with Tangit. Please note the resistance of the Tangit adhesive.

2.5 Hydraulic/Mechanical Accessories

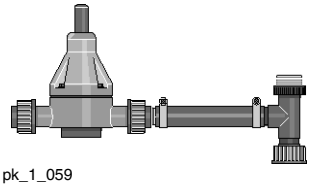

pk_1_059

Relief valves

Consisting of back pressure valve, adjustable between 0.5 and 10 bar. DHV-RM type supplied with connector parts, for assembly directly onto liquid end.

PPE relief valves

Connection	G	Order no.
G 3/4 - DN 10	3/4	809991
G 1 - DN 15	1	809992

PCB* relief valves

Connection	G	Order no.
G 3/4 - DN 10	3/4	809993
G 1 - DN 15	1	914745

*** Caution:** The product contains adhesive joints with Tangit. Please note the resistance of the Tangit adhesive.

2.5.6 Pulsation damper

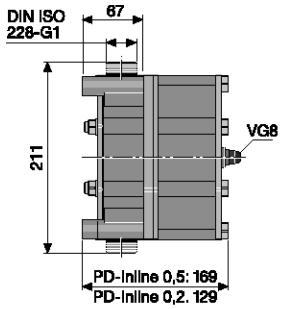

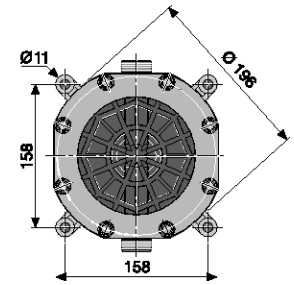

pk_2_106_1

In-line pulsation damper PVDF

Function: Hydropneumatic accumulator with baffle

The PVDF accumulator with PTFE diaphragm offers outstanding resistance to chemicals and can therefore be used in connection with a large number of different liquids. The pulsation damper has two liquid connections and can therefore be installed directly in the piping system or be installed diagonally using a blanking plug kit. The baffle in the liquid valve directs the volume flow straight at the diaphragm. This ensures direct contact of the volume flow with the diaphragm. Fluctuations in volume flow are thus optimally balanced out by the enclosed gas volume.

Important: The pulsation dampers must be protected by an overflow valve.

Type	Volume l	Max. Pressure bar	Connection	Order no.
PD In-line	0.2	10	G 1 – DN 15	1026252
PD In-line	0.5	10	G 1 – DN 15	1026736
PD-Inline	0.2	16	G 1 – DN 15	1033446
PD-Inline	0.5	16	G 1 – DN 15	1033447
PD-Inline	0.2	25	G 1 – DN 15	1036154
PD In-line	0.5	25	G 1 – DN 15	1036155

The preload is approx. 0.6 x operating pressure. Medium temperature max. 65 °C. Connecting parts are to be ordered separately.

The accumulator is filled with nitrogen or with compressed air using a commercially available filler fitting (e.g. car tyre inflation fitting) via the VG8 gas filler connection.

Caution: Nitrogen should be used as the filler gas in connection with combustible liquids. On no account fill with oxygen!
Design: DGRL97/23/EC, other acceptance procedures/countries available on request
Fluid group: 1 and 2
Certificates: Manufacturer's test certificate M DIN55350-18
Manufacturer: HYDAC Technology

Connection/adapter kits

Consisting of PTFE-formed composite seal, insert/adapter and union nut.

Connection PD In-line	Connection Piping	Material	Order no.
G 1 – DN 15	DN 10	PP	1029424
G 1 – DN 15	DN 10	PVC	1029425
G 1 – DN 15	DN 10	PVDF	1029426
G 1 – DN 15	DN 15	PP	1029443
G 1 – DN 15	DN 15	PVC	1029444
G 1 – DN 15	DN 15	PVDF	1029445
G 1 – DN 15	DN 20	PP	1029427
G 1 – DN 15	DN 20	PVC	1029428
G 1 – DN 15	DN 20	PVDF	1029429
G 1 – DN 15	DN 25	PP	1029430
G 1 – DN 15	DN 25	PVC	1029431
G 1 – DN 15	DN 25	PVDF	1029432

2.5 Hydraulic/Mechanical Accessories

Accessories/Spare Parts

	Material	Order no.
Set of plugs	PVDF / PTFE	1029446
Valve tool for Gas valve insert	Steel	1029661
Separating diaphragm	PTFE / NBR	1025235
Gas valve assy	1.4571 / FPM / PTFE / MS	1029513
Gas valve insert	FPM / PTFE / MS	1029514
Gas valve insert	FPM / PTFE / NIRO	1029515
Manometer with connection adapter	–	1031556
Charging hose with connector for compressed air system, 25 bar; 2.5 m	–	1036156
Charging hose with connector for nitrogen bottle or pressure reducer	–	1036157

Stainless steel pulsation damper

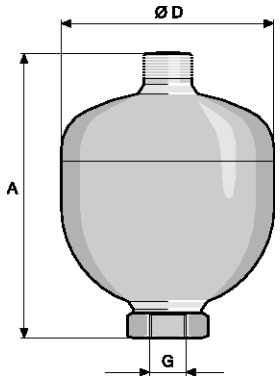

pk_2_101

Admissible operating temperature: -10 to + 80 °C. Response pressure: 5 bar (nitrogen). Other accumulator/diaphragm materials available on request.

Volume l	Max. Pressure bar	Diaphragm material	Connector G	A mm	Ø D mm	Order no.
0.16	180	NBR	Rp 1/2	124	74	1008609
0.16	180	Butyl	Rp 1/2	124	74	1008610
0.16	180	FPM	Rp 1/2	124	74	1008611
0.32	160	NBR	Rp 1/2	137	93	1008612
0.32	160	Butyl	Rp 1/2	137	93	1008613
0.32	160	FPM	Rp 1/2	137	93	1008644
0.75	140	NBR	Rp 1/2	168	121	1008645
0.75	140	Butyl	Rp 1/2	168	121	1008646
0.75	140	FPM	Rp 1/2	168	121	1008647
2.00	100	NBR	Rp 3/4	224	167	1008648
2.00	100	Butyl	Rp 3/4	224	167	1008649
2.00	100	FPM	Rp 3/4	224	167	1008650
4.00	50	NBR	Rp 3/4	360	170	1008651
4.00	50	Butyl	Rp 3/4	360	170	1008652
4.00	50	FPM	Rp 3/4	360	170	1008653
0.75	140	NBR	Rp 1	168	121	1027617
0.75	140	Butyl	Rp 1	168	121	1027618
0.75	140	FPM	Rp 1	168	121	1027619
2.00	100	NBR	Rp 1 1/2	224	167	1027620
2.00	100	Butyl	Rp 1 1/2	224	167	1027621
2.00	100	FPM	Rp 1 1/2	224	167	1027622
4.00	50	NBR	Rp 1 1/2	360	170	1027623
4.00	50	Butyl	Rp 1 1/2	360	170	1027624
4.00	50	FPM	Rp 1 1/2	360	170	1027625

Mounting clamp for stainless steel pulsation damper

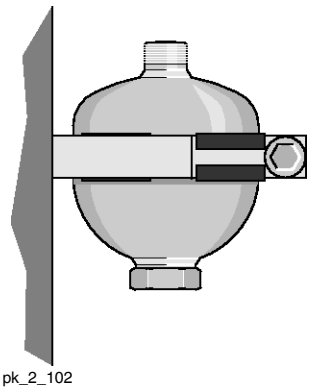

pk_2_102

Volume l	Clamps Number of	Ø D mm	Order no.
0.16	1	74	1008664
0.32	1	93	1008665
0.75	1	121	1008666
2.00	1	167	1008667
4.00	2	170	1008668

2.5 Hydraulic/Mechanical Accessories

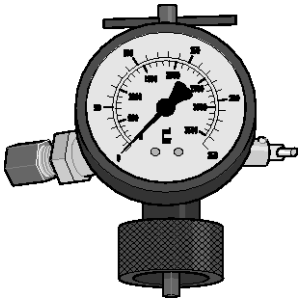

pk_2_116

Inflation and testing unit for pulsation damper

The inflation and testing unit is used to recharge accumulators with nitrogen and check or alter the existing admission pressure.

It contains:

- Checking and filling system with pressure gauge, non-return valve on the inlet, integrated bleed valve, valve stem to open gas inlet valve on accumulator.
- Charging hose, Length 2 m

Adjustment range	Order no.
up to 25 bar	1008769
up to 100 bar	1008669
up to 250 bar	1008670

Pulsation Damper (in-line)

The pulsation damper is used to produce minimal pulsation metering and to reduce flow resistance in long discharge lines.

The gas cushion between the housing and the line is compressed at a pressure stroke of the metering pump, a partial quantity of the medium being simultaneously metered into the metering line. The excess pressure generated in the gas cushion has the effect that the compressed volume is continued to be transported with the following suction stroke and the original, relieved gas volume is restored.

Important notice: The pulsation damper must be used in conjunction with a relief valve.

PP in-line damper

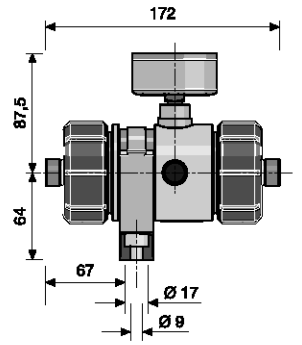

P_AC_0180_SW

Damper diaphragm is replaceable, seals made from EPDM.

Medium temperature max. 50 °C

Prepressure is approx. 0.6 x operating pressure.

	Volume l	Max. pressure bar	Dampener diaphragm	Connection	Order no.
PPE in-line dampener	0.05	10	CSM*	G 3/4 - DN 10	1026769
PPB in-line dampener	0.05	10	FPM	G 3/4 - DN 10	1026772
PDS 2.5	2.50	8	Hypalon	G 2 – DN 32	1001344
PDS 2.5	2.50	8	FPM	G 2 – DN 32	1001345

* chlorosulfonated polyethylene

For other sizes (0.2 l and 0.5 l) see in-line pulsation damper PVDF.

FPM = Fluorine Rubber

The priming pressure is approx. 0.6 x operating pressure.

Max. liquid/chemical temperature 50 °C.

PVC in-line damper

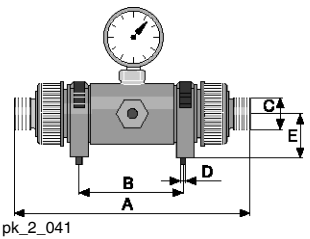

pk_2_041

Removable hose, FPM seals.

Max. liquid/chemical temperature 50 °C.

The priming pressure is approx. 0.6 x operating pressure.

	Volume l	Max. pressure bar	Dampener diaphragm	Connection	Order no.
PCE in-line dampener	0.05	10	CSM*	G 3/4 – DN 10	1026775
PCB in-line dampener	0.05	10	FPM	G 3/4 – DN 10	1026778
PDS 2.5	2.50	8	Hypalon	G 2 – DN 32	1001342
PDS 2.5	2.50	8	FPM	G 2 – DN 32	1001343

* chlorosulfonated polyethylene

For other sizes (0.2 l and 0.5 l) see in-line pulsation damper PVDF.

2.5 Hydraulic/Mechanical Accessories

2.5.7 Accumulators

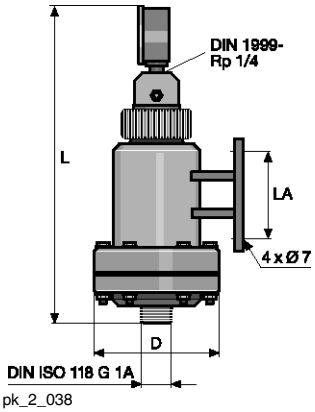

pk_2_038

Pulsation dampers with separating bubble for providing separation between the gas cushion and metered chemical are used for low-pulsation metering as well as for reducing the resistance to flow in long metering lines and in connection with viscous media. The response pressure of the gas cushion should be approx. 60-80 % of the operating pressure.

Important: When using a pulsation damper, pressure relief valve must be fitted with an adjustable back pressure valve.

PVC accumulators

Accumulator removable, FPM seals.

Volume	Diaphragm Material	Connection	L	Ø D	LA	Order no.
l			mm	mm	mm	
0.5	Butyl	G 1 DN 15	361	145	100	791691
0.5	FPM	G 1 DN 15	361	145	100	791695
1.0	Butyl	G 1 1/4 DN 20	411	170	100	791692
1.0	FPM	G 1 1/4 DN 20	411	170	100	791696
2.5*	Butyl	G 1 1/2 DN 25	611	170	160	791693
2.5*	FPM	G 1 1/2 DN 25	611	170	160	791697
5.0*	Butyl	G 2 1/4 DN 40	936	170	230	791694
5.0*	FPM	G 2 1/4 DN 40	936	170	230	791698

*** Caution:** The product contains adhesive joints with Tangit. Please note the resistance of the Tangit adhesive.

PP accumulators

Accumulator removable, EPDM seals

Volume	Diaphragm Material	Connection	L	Ø D	LA	Order no.
l			mm	mm	mm	
0.5	Butyl	G 1 DN 15	361	145	100	792128
0.5	FPM	G 1 DN 15	361	145	100	792132
1.0	Butyl	G 1 1/4 DN 20	411	170	100	792129
1.0	FPM	G 1 1/4 DN 20	411	170	100	792133
2.5	Butyl	G 1 1/2 DN 25	611	170	190	792130
2.5	FPM	G 1 1/2 DN 25	611	170	190	792134
5.0	Butyl	G 2 1/4 DN 40	936	170	400	792131
5.0	FPM	G 2 1/4 DN 40	936	170	400	792135

2.5 Hydraulic/Mechanical Accessories

2.5.8 Accumulators Without Diaphragm

Pulsation dampers with no diaphragm separating the gas cushion and the chemical. They are used to produce minimal pulsation metering and to reduce flow resistance in long pipes and when metering viscous liquids.

Important: When using accumulators or pulsation dampeners it is imperative that relief valve with an adjustable back pressure valve is fitted.

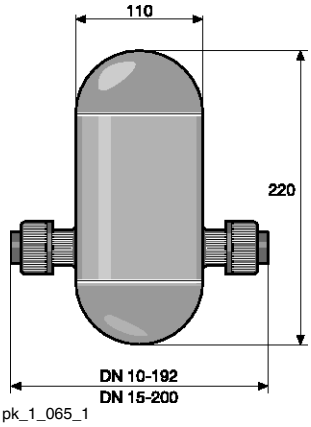

pk_1_065_1

PP in-line pressure accumulator*

Operating range

20 °C - max. operating pressure 10 bar

40 °C - max. operating pressure 6 bar

	Volume	Permissible displacement	Connection	Order no.
	l			
Size II	0	up to 5 ml	d 16–DN 10	243219
Size II	1	up to 5 ml	d 20–DN 15	243220

*** Caution:** The product contains adhesive joints with Tangit. Please note the resistance of the Tangit adhesive.

PVC in-line pressure accumulator*

Operating range

20 °C - max. operating pressure 10 bar

40 °C - max. operating pressure 6 bar

	Volume	Permissible displacement	Connection	Order no.
	l			
Size II	1	up to 5 ml	d 16–DN 10	243204
Size II	1	up to 5 ml	d 20–DN 15	243205

*** Caution:** The product contains adhesive joints with Tangit. Please note the resistance of the Tangit adhesive.

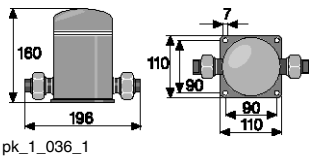

pk_1_036_1

SS in-line pressure accumulator

Max. operating pressure 10 bar

	Volume	Connection	Order no.
	l		
Size II	1	G 3/4 – DN 10	914756
Size II	1	R 1 1/2 – DN 15, with insert	914551

2.5 Hydraulic/Mechanical Accessories

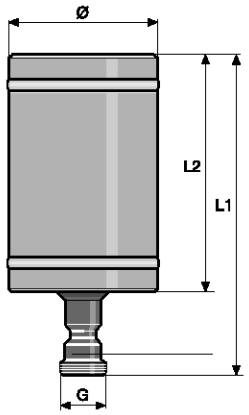

pk_2_042

PP pressure accumulator

Volume l	Connection	Ø mm	L1 mm	L2 mm	Order no.
2	G 1 1/4 – DN 20, without connection parts	140	290	220	243211
4	G 1 1/2 – DN 25, without connection parts	160	410	320	243212

PVC pressure accumulator

Operating range

20 °C - max. operating pressure 10 bar

40 °C - max. operating pressure 6 bar

Volume l	Connection	Ø mm	L1 mm	L2 mm	Order no.
2	G 1 1/4 – DN 20, without connection parts	140	290	220	243207
4	G 1 1/2 – DN 25, without connection parts	160	410	320	243208

*** Caution:** The product contains adhesive joints with Tangit. Please note the resistance of the Tangit adhesive.

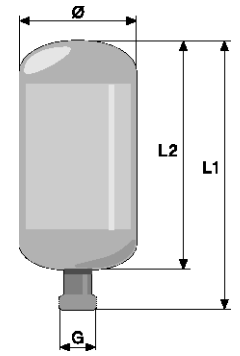

pk_2_033

SS pressure accumulator

Max. operating pressure 10 bar

Volume l	Connection	Ø mm	L1 mm	L2 mm	Order no.
2	G 1 1/4 – DN 20, without connection parts	140	272	222	243214
4	G 1 1/2 – DN 25, without connection parts	160	365	312	243215

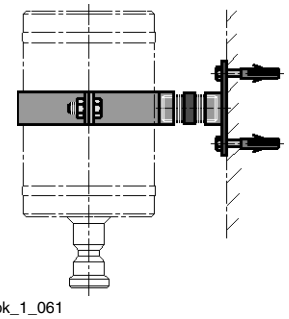

pk_1_061

Wall mounting for Accumulator (without diaphragm)

Consists of pipe clamp, mounting plate and connecting nipple.

	Ø mm	Order no.
for accumulator volume 2 l	110	818502
for accumulator volume 2 l	140	803645
for accumulator volume 4 l	160	803646

2.5 Hydraulic/Mechanical Accessories

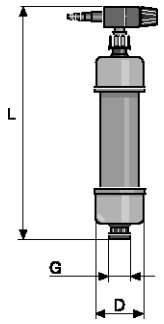

pk_2_044

Vacuum cylinder chamber PVC*

With vacuum pump connector and transparent PVC central housing section, FPM seals.

Max. operating pressure 2 bar at 40 °C operating temperature.

Volume l	Connection	L mm	D mm	Order no.
0.5	G 1 – DN 15	380**	78	243591
1.0	G 1 1/4 – DN 20	440**	86	243592
2.5	G 1 1/2 – DN 25	520**	133	243593
5.0	G 2 1/4 – DN 40	630**	155	243594

*** Caution:** The product contains adhesive joints with Tangit. Please note the resistance of the Tangit adhesive.

** approx. values

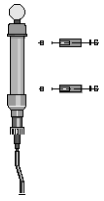

pk_2_045

Vacuum pump kit/extraction aid*

For pulsation dampeners, suction side (vacuum cylinder accumulator).

Material	Seal material	Order no.
PVC	EPDM	790019

*** Caution:** The product contains adhesive joints with Tangit. Please note the resistance of the Tangit adhesive.

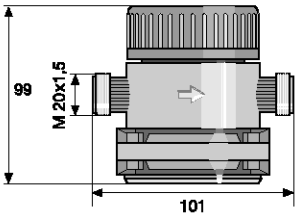

pk_2_079

Suction pressure regulator*

The suction pressure regulator is a spring-loaded diaphragm valve (max. 50 l/h) which opens as a result of the pump suction pressure. This ensures that chemicals cannot flow when the pump is not running, nor can a vacuum be created as a result of tube rupture.

A ball check valve must be fitted to prevent undesirable suction action at the pump outlet (e.g. siphon effect).

An adjustable spring is used to set the maximum required negative pressure for each operating situation up to 400 mbar. For pumps with positive inlet pressure a minimal vacuum of approx. 50 mbar is sufficient. The pump must produce this vacuum in any case, even for an atmospheric pressure inlet.

Technical Data

Max. flow rate	50 l/h
Max. feed pressure	4 bar
Max. intake pressure	0.3 bar
Max. temperature	40 °C
Housing material	PVC
Diaphragm material	FPM
Seal material	FPM
Ball material	Glass
Spring material	Hastelloy C

Type		Connection	Order no.
SDR 50	for solenoid-driven pumps	M 20 x 1.5	1005505
SDR 50	for motor-driven pumps up to 50 l/h	G 3/4 - DN 10	1005506

Connections parts to be ordered separately.

*** Caution:** The product contains adhesive joints with Tangit. Please note the resistance of the Tangit adhesive.

2.5 Hydraulic/Mechanical Accessories

2.5.9 Connector Parts, Seals, Hoses

Union nuts

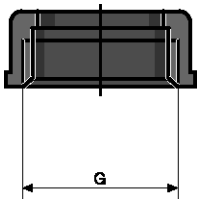

pk_2_069_a

	Material	Connection	Order no.
Union nut	PP	G 5/8 - DN 8	800665
	PP	G 3/4 - DN 10	358613
	PP	G 1 - DN 15	358614
	PP	G 1 1/4 - DN 20	358615
	PP	G 1 1/2 - DN 25	358616
	PP	G 2 - DN 32	358617
	PP	G 2 1/4 - DN 40	358618
	PP	G 2 3/4 - DN 50	358619
	PVC	G 5/8 - DN 8	800565
	PVC	G 3/4 - DN 10	356562
	PVC	G 1 - DN 15	356563
	PVC	G 1 1/4 - DN 20	356564
	PVC	G 1 1/2 - DN 25	356565
	PVC	G 2 - DN 32	740690
	PVC	G 2 1/4 - DN 40	356567
	PVC	G 2 3/4 - DN 50	356568
	PVDF	G 3/4 – DN 10	358813
	PVDF	G 1 - DN 15	358814
	PVDF	G 1 1/4 - DN 20	358815
	PVDF	G 1 1/2 - DN 25	358816
	PVDF	G 2 - DN 32	1003639
	PVDF	G 2 1/4 - DN 40	358818
	PVDF	G 2 3/4 - DN 50	358819
	1.4571	G 3/4 – DN 10	805270
	1.4571	G 1 - DN 15	805271
	1.4571	G 1 1/4 - DN 20	805272
	1.4571	G 1 1/2 - DN 25	805273
	1.4571	G 2 - DN 32	805274
	1.4571	G 2 1/4 - DN 40	805275
	1.4571	G 2 3/4 - DN 50	805276

Inserts

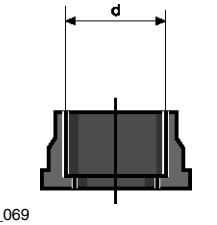

pk_2_069

	Material	Connection	Order no.
fusion socket	PP	d 12 – DN 8	800666
	PP	d 16 – DN 10	358603
	PP	d 20 – DN 15	358604
	PP	d 25 – DN 20	358605
	PP	d 32 – DN 25	358606
	PP	d 40 – DN 32	358607
	PP	d 50 – DN 40	358608
	PP	d 63 – DN 50	358609
	PVDF	d 16 – DN 10	358803
	PVDF	d 20 – DN 15	358804
	PVDF	d 25 – DN 20	358805
	PVDF	d 32 – DN 25	358806
	PVDF	d 40 – DN 32	1003640
	PVDF	d 50 – DN 40	358808
	PVDF	d 63 – DN 50	358809

2.5 Hydraulic/Mechanical Accessories

	Material	Connection	Order no.
Fusion coupler, grooved*	PP	d 16 – DN 10	1001785
	PP	d 20 – DN 15	1001395
	PP	d 25 – DN 20	1036258
	PP	d 32 – DN 25	1001787
	PP	d 40 – DN 32	1005105
	PP	d 50 – DN 40	1025960
	PP	d 63 – DN 50	1019207
	PVDF	d 16 – DN 10	358803
	PVDF	d 20 – DN 15	358804
	PVDF	d 25 â€“ DN 20	1036259
	PVDF	d 32 – DN 25	1001788
	PVDF	d 40 – DN 32	1003640
	PVDF	d 50 – DN 40	1025959
	PVDF	d 63 – DN 50	1019208

* to be used together with ProMinent® formed composite seals PTFE.

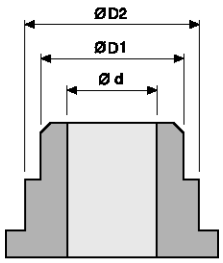

P_AC_0210_SW

	Material	Ø D1 mm	Ø D2 mm	Connection	Order no.
Fusion coupler SS, grooved	1.4404	15.0	19.5	d 12 – DN 10	1006011
	1.4404	21.0	25.6	d 16 – DN 15	1006001
	1.4404	26.7	33.6	d 22 – DN 20	1031457
	1.4404	33.4	39.6	d 28 – DN 25	1031458
	1.4404	42.2	49.6	d 36 – DN 32	1031459
	1.4404	48.3	57.5	d 40 – DN 40	1023643
	1.4404	71.6	60.3	d 54 – DN 50	1031460

	Material	Connection	Order no.
Adhesive socket	PVC	d 16 – DN 10	356572
	PVC	d 20 – DN 15	356573
	PVC	d 25 – DN 20	356574
	PVC	d 32 – DN 25	356575
	PVC	d 40 – DN 32	356576
	PVC	d 50 – DN 40	356577
	PVC	d 63 – DN 50	356578

	Material	Connection	Order no.
Adhesive coupler, grooved*	PVC	d 16 – DN 10	1001784
	PVC	d 20 – DN 15	1001394
	PVC	d 25 â€“ DN 20	1036257
	PVC	d 32 – DN 25	1001786
	PVC	d 40 – DN 32	1005104
	PVC	d 50 – DN 40	1025961
	PVC	d 63 – DN 50	1019206

* to be used together with ProMinent® formed composite seals PTFE.

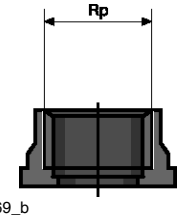

pk_2_069_b

	Material	Connection	Order no.
Threaded pipe socket	1.4404	Rp 3/8 – DN 10	805285
	1.4404	Rp 1/2 – DN 15	805286
	1.4404	Rp 3/4 – DN 20	805287
	1.4404	Rp 1 – DN 25	805288
	1.4404	Rp 1 1/4 – DN 32	805289
	1.4404	Rp 1 1/2 – DN 40	805290
	1.4404	Rp 2 – DN 50	805291

2.5 Hydraulic/Mechanical Accessories

Pressure hose nozzles



pk_2_046

	Material	Connection	Order no.
Pressure hose nozzle	PP	d 16 – DN 10	800657
	PP	d 20 – DN 15	800655
	PP	d 25 – DN 20	800656
	PP	d 32 – DN 25	811418
	PVC	d 16 – DN 10	800554
	PVC	d 20 – DN 15	811407
	PVC	d 25 – DN 20	811408
	PVC	d 32 – DN 25	811409
	PTFE	d 16 – DN 10	811572
	PTFE	d 20 – DN 15	811424
	PTFE	d 25 – DN 20	811425
	PTFE	d 32 – DN 25	811426
	PVDF	d 40 – DN 32	1005106
	1.4571	d 16 – DN 10	810536
	1.4571	d 20 – DN 15	810567
	1.4571	d 25 – DN 20	810568
	1.4571	d 32 – DN 25	810569
	1.4571	d 40 – DN 32	1005360

	Material	Connection	Order no.
Hose nozzle, grooved	PVDF	d 16 – DN 10	1002288
	PVDF	d 20 – DN 15	740632
	PVDF	d 25 – DN 20	1006014
	PVDF	d 32 – DN 25	1005560
	PVDF	d 40 – DN 32	1005106

to be used together with ProMinent® formed composite seals PTFE.

Stainless steel threaded clip

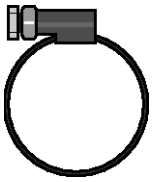

pk_1_068

For connecting intake and metering line to pressure hose nozzle.

	Clamping range mm	Order no.
DN 10 clamping ring	16 – 25	359703
DN 15 clamping ring	20 – 32	359705
DN 20 clamping ring	25 – 40	359706
DN 25 clamping ring	32 – 50	359707
DN 32 clamping ring	40 – 60	1002777

PTFE-formed composite seals

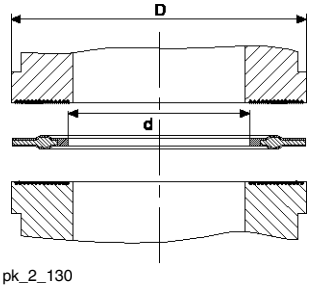

pk_2_130

Formed composite seals are to be used on grooved sealing surfaces (e.g. pump valve and grooved inserts from ProMinent).

DN	Material	D mm	d mm	Order no.
DN 10	PTFE	23.8	14.0	1019364
DN 15	PTFE	29.5	18.0	1019365
DN 20	PTFE	38.0	22.6	1019366
DN 25	PTFE	44.0	27.6	1019367
DN 32	PTFE	56.0	34.6	1019353
DN 40	PTFE	62.0	40.6	1019368

2.5 Hydraulic/Mechanical Accessories

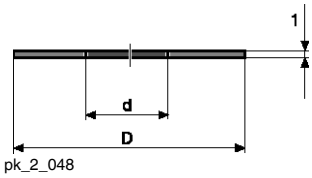

pk_2_048

Set of elastomer flat packing seals

Consisting of an EPDM and FPM seal. An elastomer flat packing seal must be used in connection with non-grooved sealing surfaces. Leaks may occur at the connection if a PTFE formed composite seal is used.

	D	d	Order no.
	mm	mm	
DN 10	23.5	14.0	1024159
DN 15	29.5	18.0	1024160
DN 20	38.0	22.6	1036254
DN 25	44.0	28.0	1024161
DN 32	56.0	36.0	1024162
DN 40	62.0	41.0	1029508

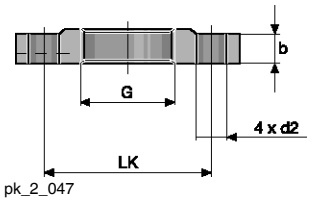

pk_2_047

Flange mountings

Flange connection in line with DIN 2566 for ProMinent® valve sizes.

Material	G/DN	Pressure rating	b	Ø LK	d2	Order no.
		PN	mm	mm	mm	
PVDF	G 3/4 – DN 10	PN 16	12.4	60	14	1036274
PVDF with seal*	G 3/4 – DN 10	PN 16	12.4	60	14	1036279
PVDF	G 1 – DN 15	PN 16	13.0	65	14	1036275
PVDF with seal*	G 1 – DN 15	PN 16	13.0	65	14	1036280
PVDF	G 1 1/4 – DN 20	PN 16	15.0	75	14	1036276
PVDF	G 1 1/2 – DN 25	PN 16	16.0	85	14	1036277
PVDF with seal*	G 1 1/2 – DN 25	PN 16	16.0	85	14	1036281
PVDF	G 2 – DN 32	PN 16	18.0	100	18	1036278
PVDF with seal*	G 2 – DN 32	PN 16	18.0	100	18	1036282
1.4404	G 3/4 – DN 15	PN 40	12.0	65	14	803946
1.4404	G 1 – DN 15	PN 40	12.0	65	14	803940
1.4404	G 1 1/4 – DN 20	PN 40	15.0	75	14	803941
1.4404	G 1 1/2 – DN 25	PN 40	15.0	85	14	803942
1.4404	G 2 – DN 32	PN 40	18.0	100	18	1036283
1.4404	G 2 1/4 – DN 40	PN 40	20.0	110	18	803943
1.4404	G 2 3/4 – DN 50	PN 40	25.0	125	18	1020453
1.4404	G 2 1/2 – DN 65	PN 40	20.0	145	18	1010700

* Flange mountings with a seal must be used for pumps Sigma/ 1, Sigma/ 2 with DN 15 connector and Sigma/ 3 with DN 25 connector.

Other flange versions are available on request.

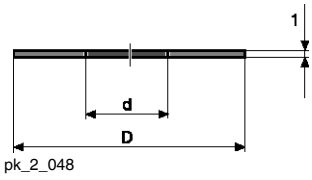

pk_2_048

Flat seals for previous flange mountings

Material	G/DN	D	d	Order no.
		mm	mm	
PTFE	G 3/4 - DN 15	52	12	483938
PTFE	G 1 - DN 15	52	17	483924
PTFE	G 1 1/4 - DN 20	62	22	483925
PTFE	G 1 1/2 - DN 25	72	27	483926
PTFE	G 2 - DN 32	83	33	1007541
PTFE	G 2 1/4 - DN 40	92	40	483928
PTFE	G 2 3/4 - DN 50	108	50	483929
PTFE	G 3 - DN 65	130	60	1020466
FPM	G 3/4 - DN 15	52	12	483939
FPM	G 1 - DN 15	52	17	483942
FPM	G 1 1/4 - DN 20	62	22	483943
FPM	G 1 1/2 - DN 25	72	27	483944
FPM	G 1 1/2 - DN 32	83	33	1007542
FPM	G 2 1/4 - DN 40	92	40	483946
FPM	G 2 3/4 - DN 50	108	50	483947
FPM	G 3 - DN 65	130	60	1020467

Flange mountings as DIN 2629. To order for Meta HK and Makro TZ HK plunger metering pumps.

FPM = Fluorine Rubber

2.5 Hydraulic/Mechanical Accessories

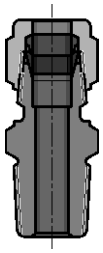

pk_1_028

Straight male adapter stainless steel

Swagelock system, stainless steel SS 316 (1.4401) for connection of pipework to liquid end and valves with internal thread and for SB version.

	Order no.
6 mm - ISO 7 R 1/4	359526
8 mm - ISO 7 R 1/4	359527
12 mm - ISO 7 R 1/4	359528
12 mm - ISO 7 R 3/8	359520
16 mm - ISO 7 R 3/8	359521

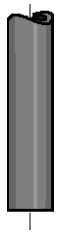

pk_1_013

Suction line

for metering pumps and accessories. We recommend using the original lines to ensure the mechanical connection in case of clamping ring fittings as well as compressive strength and chemical resistance.

On request, food grade version is possible.

Material	oØ x iØ		Permissible operating pressure	Order no.
	mm		bar	
Flexible PVC	19 x 15	for DN 10	0.5*	037020
Flexible PVC	22 x 18	for DN 15	0.5*	037022

Caution:

The resistance of soft PVC hoses is not identical with that of hard PVC. Please observe the resistance for PVC soft as well as the cleaning instructions when using the equipment for foodstuff applications (see homepage).

* permissible operating pressure at 20 C, chemical resistance and proper connection assumed.

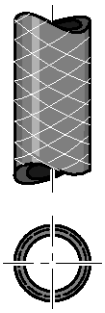

pk_1_060

Suction and discharge line

On request, food grade version is possible.

Material	oØ x iØ		Permissible operating pressure	Order no.
	mm		bar	
Fabric reinforced flexible PVC	24 x 16	for DN 10	16*	037040
Fabric reinforced flexible PVC	27 x 19	for DN 15	16*	037041
Fabric reinforced flexible PVC	34 x 25	for DN 20	12*	037043
Fabric reinforced flexible PVC	40 x 30	for DN 25	10*	1000527
Fabric reinforced flexible PVC	52 x 40	for DN 32	7*	1005508
Stainless steel pipe 1.4435	6 x 5	–	175*	015738
Stainless steel pipe 1.4435	6 x 4	–	185*	015739
Stainless steel pipe 1.4435	8 x 7	–	160*	015740
Stainless steel pipe 1.4435	12 x 10	Sold by meter	200*	015743

Caution:

The resistance of soft PVC hoses is not identical with that of hard PVC. Please observe the resistance for PVC soft as well as the cleaning instructions when using the equipment for foodstuff applications (see homepage).

For socket welded and PVC cemented rigid PP and PVDF pipe, pipes and fittings with a pressure rating of PN 16 or PN 10 bar are to be used.

* permissible operating pressure at 20 C, chemical resistance and proper connection assumed.

Hose Cutting Kit

Hose Cutting Set for Plastic Pipes up to a Diameter of 25 mm. Manufacturer: Gedore.

	Order no.
Hose Cutting Kit	1038571

2.5 Hydraulic/Mechanical Accessories

2.5.10 Metering pump wall mounting bracket

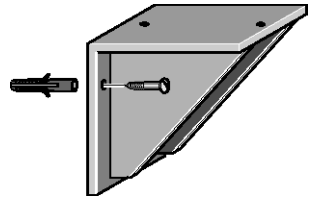

pk_2_036

Metering pump wall mounting bracket for Vario, Sigma and Meta

PP wall mounting, holds pump parallel to the wall, includes fixings.

Measurements: L x W x H, 230 x 220 x 220 mm

		Order no.
wall mounting bracket	for Vario, Sigma and Meta	1001906

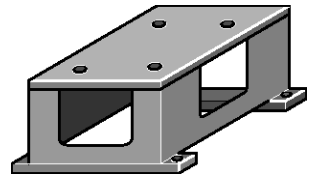

pk_2_037

Floor mounting for Sigma, Meta

For mounting metering pump, includes fixings. Material PP.

Measurements: L x W x H 250 x 160 x 150 mm

	Order no.
floor mounting	809910

2.6 Electrical Accessories

2.6.1 Controllers

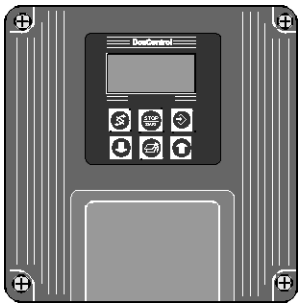
pk_2_049

DosControl dosing controller

The DosControl metering controller is a universal controller for controlling motor metering pumps and solenoid valves. The design of the controller is based on the hardware of the D1C W controller range. The following functions are available as standard:

1. as preselection counter (default)

- Adjustment of preset stroke rate batch volume via keypad and LCD display (0-29,999 strokes)
- Start contact via keypad or external contact
- Metering pump stroke position response signal via pulse generator relay or stroke sensor
- Metering pump control via power relay (230 V, 5 A), i.e. on/off of voltage supply to motor pump
- Alarm relay output, i.e. combined error message for customer use
- Level monitor, connection for 1-phase level switch

2. as proportional control

- Control of the pump via:
  - potential-free contact input, e.g. of water meter with setting of the transfer factor via keypad and LCD display
  - or internal control via adjustable stroke rate
  - or analogue control via 0/4-20 mA input with adjustable maximum stroke rate
- Metering pump control via power relay (230 V, 5 A), i.e. on/off of voltage supply to motor pump
- Alarm relay output, i.e. combined error message for customer use
- Level monitor, connection for level switch

	Order no.
DosControl 230 V/50/60 Hz	1001306
DosControl 115 V/50/60 Hz	1001925
Mounting kit for control panel installation	792908

Note:

The DosControl dosing controller is configurated with “Control setting selection” as per standard. Other configurations are available on request/to order.

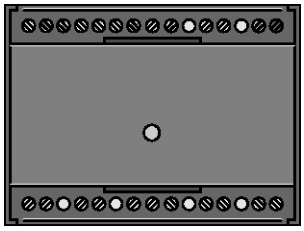
pk_2_050

Fourfold contact repeater

Contact repeater with four reed relays for externally controlled simultaneous pulse pacing of up to four metering pumps of any type, or of other devices, e.g. summating counters.

In plastic snap in housing for C bar or wall mounting.

Mains connection:	230 V, 50/60 Hz
Max. contact rating	24 V, 50 mA
Dimensions H x W x D	76 x 112 x 114
Enclosure rating	IP 40

	Order no.
Fourfold contact repeater	914753

2.6 Electrical Accessories

2.6.2 Speed Controllers

Frequency converter for speed controller

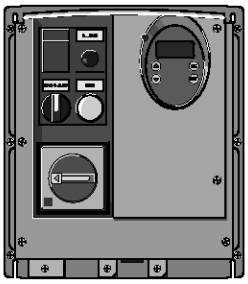

P_AC_0185_SW

Frequency converters are installed in the IP 55 protective enclosure and are suitable for the motor output ratings listed below.

Integrated control unit with various functions that are optimally matched to ProMinent metering pumps: Selectable external/internal control, internal/external reset, temperature monitoring and control via PTC sensor, separate motor fan control as well as evaluation of diaphragm rupture monitoring.

Internal control: via potentiometer
External control: 0/4-20 mA correspond to 0-50 (60) Hz output frequency

Frequency converters can be used in the range of -10 °C to 40 °C.

Max. motor output kW	For pump type	Voltage supply	Voltage supply, external fan	Control range	Order no.
0.37	Sigma/ 1, Sigma/ 2, Meta, Hydro/ 2, MF1a, DR15	1 ph 200-240 V	230 V 50/60 Hz	1:10	1030684
0.75	Sigma/ 3, Hydro/ 3, MF2a	1 ph 200-240 V	230 V 50/60 Hz	1:10	1030685
1.50	Makro TZ, MF2a, MF3a, DR150	1 ph 200-240 V	230 V 50/60 Hz	1:10	1030686
2.20	Makro TZ, MF3a, DR150	1 ph 200-240 V	230 V 50/60 Hz	1:10	1030687
4.00	MF3a, MF4a	3 ph 380-500 V	3 ph 380 V	1:5	1030688

Dimensions and weight

Order no.	B mm	H mm	C mm	Weight kg
1030684	210	240	163	6.3
1030685	210	240	163	6.3
1030686	215	297	192	8.8
1030687	230	340	222	10.7
1030688	230	340	222	10.7

Variable speed motors with integrated speed controller

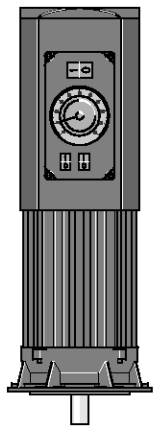

pk_2_103

Externally controllable with 0/4-20 mA (factory setting 4-20 mA)

Voltage supply: 1 ph 230 V, 50/60 Hz (0.37-1.1 kW)
Voltage supply: 3 ph 400 V, 50/60 Hz (1.5-3 kW)

The following functions are integrated in the terminal box cover:

- Start/stop switch
- Switch for manual/external operation
- Potentiometer for speed control in manual mode.

Max. motor output kW	For pump	Control range	Flange Ø mm	Order no.
0.18	Sigma/ 1	1:20	120	1020229
0.37	Sigma/ 2	1:20	105	1008568
0.37	Hydro/ 2, Meta	1:20	160	1008569
0.55	Sigma/ 3	1:20	160	1008570
0.75	Hydro/ 3	1:20	160	1008571
1.10	Makro TZ (TZMB)	1:20	160	1008572
1.50	Makro TZ	1:20	160	1008573

2.6 Electrical Accessories

Max. motor output kW	For pump	Control range	Flange Ø mm	Order no.
2.20	Makro TZ	1:20	200	1008574
3.00	Makro/ 5	1:20	250	1027482

Motor data sheets can be requested for more information.

Special motors or special motor flanges are available on request.

In compliance with the Ecodesign Directive 2005/32/EC, motors of less than 0.75 kW and motor that are designed for speed-controllable operation are not subject to the IEC2 standard.

Operating unit for setting control parameters

	Order no.
with sub-D connector (old)	1020585
with Western connector (new)	1029493

Note:

Version suitable for use in ambient temperatures up to 55°C available on request.

Explosion-protected compact drive with integrated frequency converter Protection class II 2G Eexde II C T4

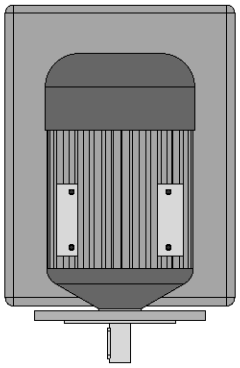

P_AC_0211_SW

Voltage supply:	400 V, 50/60 Hz
Mains feed:	3 ph + neutral + earth
Model:	IM B5
Inputs:	2 x analogue 0/4…20 mA
	4 x digital (includes frequency input 0…100 kHz)
Outputs:	2 x analogue 4…20 mA
	4 x digital 0/+20 V, 10 mA
	1 x frequency output 0…10 kHz, 0/18…24 V, max. 5 mA
Terminal strip connectors:	ON/OFF
	Self-locking
	RESET

Winding and temperature monitoring by PTC resistor with integral evaluation.

External control circuit: 230 V with internal fuse.

Note:

Delivery on request

Max. motor output kW	For pump	Control range	Flange Ø mm
0.55	Hydro/ 2, Sigma/ 3, Orlita MF	1:10	80
0.75	Hydro/ 3, Orlita MF	1:10	80
1.50	Makro TZ, Orlita MF	1:10	200
2.20	Makro TZ, Orlita MF	1:10	200
4.00	Makro/ 5, Orlita MF	1:10	250

Pumps with compact drive are always delivered on a frame.

Motor data sheets can be requested for more information.

Special motors or special motor flanges and other control ranges are available on request.

In compliance with the Ecodesign Directive 2005/32/EC, motors of less than 0.75 kW and motor that are designed for speed-controllable operation are not subject to the IEC2 standard.

2.6 Electrical Accessories

2.6.3 General Electrical Accessories



pk_1_085

Universal control cable

For control of the metering pump via potential-free contact, analogue standard signal and for potential-free ON/ OFF switching - switch-on function.

For Vario, S1Ca, S2Ca and S3Ca with 5P round plug made of plastic and 5-wire cable with open end.

	Cable length m	Order no.
Universal cable	2	1001300
Universal cable	5	1001301
Universal cable	10	1001302

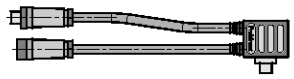

P_AC_0208_SW

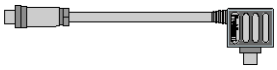

P_AC_0209_SW

Profibus adaptor, IP65 protection

from 5-way M12 eurofast, length approx. 300 mm

		fig.	Order no.
Y-adapter 2 x M12 x 1 male/female	M12 x 1 male	P_AC_0208_SW	1024216
Adapter 1 x M12 x 1 male	M12 x 1 male	P_AC_0209_SW	1024219
PROFIBUS® Y-adapter	M 12 x 1	P_AC_0230_SW	1036621
PROFIBUS® termination resistance, plug-in	M 12 x 1	P_AC_0239_SW	1036622

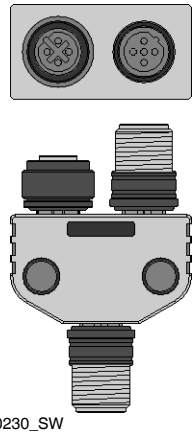

P_AC_0230_SW

USB adaptor

To connect a laptop to metering pumps in the gamma and Sigma series.

The USB adapter can be used to transfer timer programmes created using ProTime software to the pump. You will find the ProTime software on our home page.

	Order no.
USB Adapter	1021544

2.6 Electrical Accessories

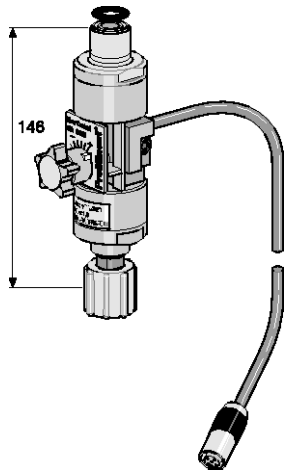

pk_1_086_2

Flow Control adjustable flow monitor

fits series Sigma/ 1 / 2 / 3 in PVT and SST material versions. Supplied complete with connection cable for assembly directly onto the liquid end.

Monitors individual strokes in accordance with float and orifice principle. Using the adjustment screw, the partial dose flowing past the float can be matched to the set lift volume in such a way that any significant shortfall on the target dose will trigger an alarm signal. Using the Sigma Control (S1Ca/S2Ca/S3Ca) the permissible number of uncompleted full strokes can be selected in the range 1-127, enabling optimum matching to your process demands. Recommended operation for Sigma Control is “external switching operation”.

Materials

Flow meter: PVDF
Float: PTFE-coated
Seals: FPM/EPDM

Flow Control	Seal material	For pump	Order no.
Flow Control DN 10	EPDM	Sigma/ 1	1021168
Flow Control DN 10	FPM	Sigma/ 1	1021169
Flow Control DN 15	EPDM	Sigma/ 1 / 2	1021170
Flow Control DN 15	FPM	Sigma/ 1 / 2	1021171
Flow Control DN 25	EPDM	Sigma/ 2 / 3	1021164
Flow Control DN 25	FPM	Sigma/ 2 / 3	1021165
Flow Control DN 32	EPDM	Sigma/ 3	1021166
Flow Control DN 32	FPM	Sigma/ 3	1021167

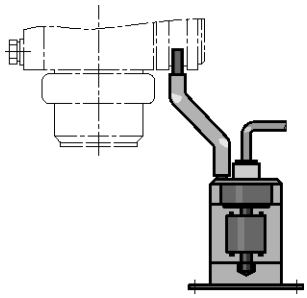

pk_1_087

Diaphragm failure indicator

Triggers alarm and switches off metering pump in the event of diaphragm rupture. Consists of float switch, PVC/PE, Acrylic container, connectors and connecting hose. Voltage free making contact, max. contact voltage 60 V AC, 300 mA, 18 W.

	For pump	Order no.
Diaphragm failure detector	Meta, Makro TZ	803640
diaphragm failure monitor	Makro/ 5	1019528

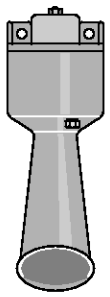

pk_1_088

Siren

HUW 55, 230 V, 50 - 60 Hz,

165 x 60 x 65, 85 phon, indoor.

(e.g. in association with fault indicating relay or relay controller)

	Order no.
Horn HUW 55	705002

Warning light

Wall mounted, red, 230 V, 50 - 60 Hz.

(e.g. in association with fault indicating relay, pulse generator or relay controller)

	Order no.
Indicator lamp, red	914780

2.7 Special Accessories

2.7.1 Custom Accessories

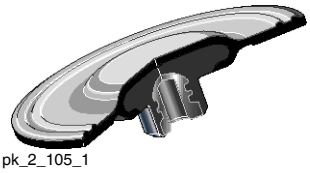

pk_2_105_1

FPM dosing diaphragm

As standard diaphragm but made of FPM, and without PTFE coating. Designed specifically for crystallising chemicals, e.g. silicate. Max. operating pressure 6 bar.

For pump type	Order no.
Vario 12017, 12026, 12042	811308
Vario 10025, 09039, 07063	811309
Vario 06047, 05075, 04120	811310
Sigma/ 1 (old version) 12017, 12035, 10050	1010281
Sigma/ 1 (old version) 10022, 10044, 07065	1010284
Sigma/ 1 (old version) 07042, 04084, 04120	1010287
Sigma/ 2 (old version) 16050, 16090, 16130	1018953
Sigma/ 2 (old version) 07120, 07220, 04350	1018984
Sigma/ 3 (old version) 120145, 120190, 120270, 120330	1006564
Sigma/ 3 (old version) 070410, 070580, 040830, 041030	1006566

Additional custom diaphragms for other pump types are available on request.

FPM = Fluorine Rubber

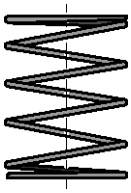

pk_1_103

Liquid end valve springs

with approx. 0.05-0.1 bar priming pressure for spring loading of the valve balls in the liquid end. Recommended to improve the valve function and to increase the metering accuracy, in particular for viscous metering media above 50 m Pas.

	Order no.
1.4571 valve spring 0.05 bar for 1/4" connector on Meta/Makro TZ HK	469461
1.4571 valve spring 0.05 bar for 3/8" connector on Makro TZ HK	469462
Hastelloy C valve spring 0.1 bar DN 10	469114
Hastelloy C valve spring 0.1 bar DN 15	469107
Hastelloy C valve spring 0.1 bar DN 20	469451
Hastelloy C valve spring 0.1 bar DN 25	469452

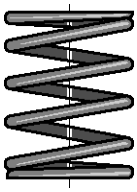

pk_1_104

Injection valve springs

With approximately 0.5-1 bar priming pressure for increased metering reproducibility and prevention of suction and siphoning effect.

	Order no.
Hastelloy C valve spring 0.5 bar DN 10	469115
Hastelloy C valve spring 1 bar DN 10	469119
Hastelloy C valve spring 0.5 bar DN 15	469108
Hastelloy C valve spring 1 bar DN 15	469116
Hastelloy C valve spring 0.5 bar DN 20	469409
Hastelloy C valve spring 1 bar DN 20	469135
Hastelloy C valve spring 0.5 bar DN 25	469414
Hastelloy C valve spring 1 bar DN 25	469136
Hastelloy C valve spring 0.5 bar DN 40	469104
Hastelloy C valve spring 1 bar DN 40	469137

Hastelloy C valve spring with FEP coating

	Order no.
Hastelloy C/PVDF valve spring 0.5 bar for DN 10	818515
Hastelloy C/PVDF valve spring 0.5 bar for DN 15	818516
Hastelloy C/PVDF valve spring 0.5 bar DN 10	818517
Hastelloy C/PVDF valve spring 0.5 bar DN 25	818518
Hastelloy C/PVDF valve spring 0.5 bar DN 40	818519

2.7 Special Accessories

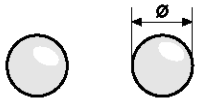

pk_1_102

Custom valve balls

Ball valves and accessories for on site retrofitting of metering pumps when the standard material is unsuitable. Supplied loose only.

	Order no.
PTFE diameter 11.0 for DN 10 valve	404260
PTFE diameter 16.0 for DN 15 valve*	404259
PTFE diameter 20.0 for DN 20 valve	404256
PTFE diameter 25.0 for DN 25 valve	404257
PTFE diameter 38.1 for DN 40 valve	404261
Ceramic diameter 11.1 for DN 10 valve	404277
Ceramic diameter 16.0 for DN 15 valve*	404275
Ceramic diameter 20.0 for DN 20 valve	404273
Ceramic diameter 25.0 for DN 25 valve	404274
Ceramic diameter 38.1 for DN 40 valve	404278

* not suitable for PVT valve material.

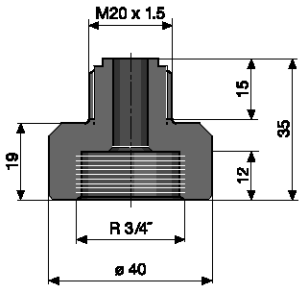

pk_2_058

Adapter for DN 10, 3/4" (Vario, g/ 5) to M20 x 1,5

Fits 12 x 9 hose connector set

	Material	Order no.
Adapter from DN 10, 3/4" inner thread to M20 x 1.5 outer thread	PP	800815
Adapter from DN 10, 3/4" inner thread to M20 x 1.5 outer thread	PVC	800816

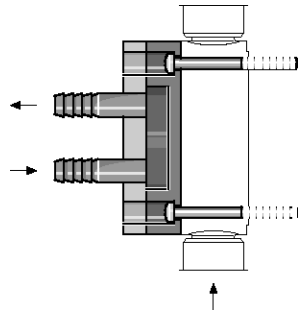

pk_2_059

Cooling/heating equipment, diaphragm metering pumps

For stainless steel liquid end. For assembly, including retrofitting, onto liquid end. 10 mm diameter connectors for hot/cold chemicals with locking screws. Dimensions in mm. Outer diameter A, pitch circle diameter LK.

Temperature -10 … 80 °C

For pump	Ø A mm	Ø LK mm	Order no.
Meta, Makro TZ FM 130, FM 260	145	127	803751
Meta, Makro TZ FM 530	180	164	803752
Makro TZ FM 1500/2100	248	219	806005
Makro/ 5 FM 4000	–	–	1020683
Sigma/ 1 (old version) FM 50/65	–	–	1025500
Sigma/ 1 (old version) FM 120	–	–	1025501
Sigma/ 2 (old version) FM 130	–	–	1002178
Sigma/ 2 (old version) FM 350	–	–	1002179
Sigma/ 3 (old version) FM 330	–	–	1006455
Sigma/ 3 (old version) FM 1000	–	–	1006456
Hydro/ 2/3 FMH 025/060	–	–	1024743

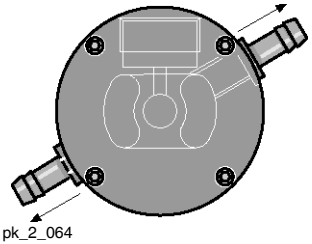

pk_2_064

Cooling/heating equipment, plunger metering pumps

The cooling/heater is installed in the liquid end. 10 mm diameter connectors. Cannot be retrofitted.

For pump	Order no.
Sigma HK - 08 S	on request
Meta/Sigma HK - 12,5 S	803551
Meta/Sigma HK - 25 S	803552
Meta/Sigma HK - 50 S	803553

Cooling/heater for Makro TZ HK on request.

2.7 Special Accessories

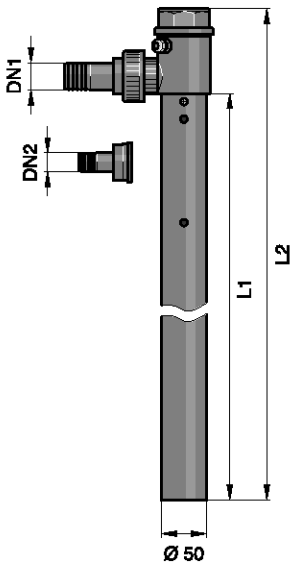

pk_2_100

Suction lance for motor metering pumps*

Universal PVC suction lances with level switch in protective tube Ø 50 incorporating non-return valve (not detachable), hydraulic connector with PVC hose grommets.

DN 10/15 is fitted with a non-return ball valve (borosilicate glass ball; EPDM seals) and DN 20/25, DN 32 is fitted with an EPDM non-return valve.

Suction lance for 200 l/600 l drum

Type	Suction connector DN 1	DN 2	Seal material	L1	L2	Order no.
				mm	mm	
PCB	10/15	10/15	FPM	1000	1100	1037748
PCE	10/15	10/15	EPDM	1000	1100	1037749
PCB	20/25	20/25	FPM	1000	1100	1037750
PCE	20/25	20/25	EPDM	1000	1100	1037751
PCB	32	–	FPM	1000	1100	1037752
PCE	32	–	EPDM	1000	1100	1037753

Suction lance for 1,000 l container

Type	Suction connector DN 1	DN 2	Seal material	L1	L2	Order no.
				mm	mm	
PCB	10/15	10/15	FPM	1200	1300	1037722
PCE	10/15	10/15	EPDM	1200	1300	1037723
PCB	20/25	10/15	FPM	1200	1300	1037744
PCE	20/25	10/15	EPDM	1200	1300	1037745
PCB	32	–	FPM	1200	1300	1037746
PCE	32	–	EPDM	1200	1300	1037747

Custom materials/custom lengths/custom functions available on request.

*** Caution:** The product contains adhesive joints with Tangit. Please note the resistance of the Tangit adhesive.

2.7 Special Accessories

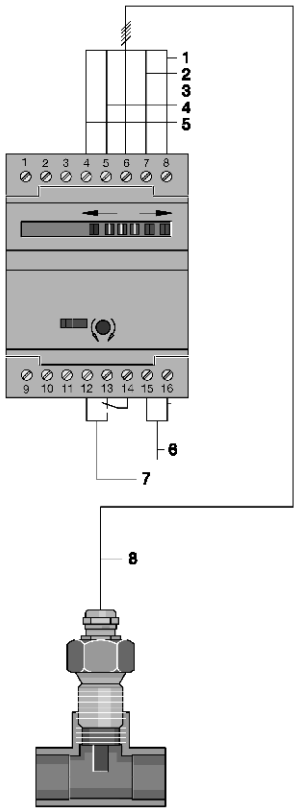

pk_1_119

1 grey
2 black
3 brown
4 blue
5 white
6 Mains voltage
7 Relay flow control
8 Connecting for sensor

Thermal dosing monitor

The flow monitor consists of a sensor and monitor electronics. It operates on the principle of heat transference from the water flow and can be used with all solenoid and motor driven metering pumps at or above a continuous metering quantity of 0.5 l/h.

Monitor electronics

The fault indicating relay is triggered when normally flowing liquid ceases to flow (switching power 250 V/4 A). At this point the relay opens for 3-20 sec (adjustable). The switch status is indicated by LED. Continuous flow volume adjustment.

Enclosure rating	Enclosure IP 40 Terminal box IP 00
Permissible ambient temperature	0…60 °C

	Electrical connection	Order no.
Evaluation electronics	230 V, 50/60 Hz	792886

	Order no.
Probe C	1022339

Single-section ceramic sensor

Outer thread	G 1/2
Operating temperature	5 °C to 60 °C medium temperature, not suitable for alkaline solutions
Lead length	Fixed input lead. Cable length 2 m.
Max. lead length	100 m
Enclosure rating	IP 67
Pressure resistance	7 bar
Adjustment range	0 - 60 cm/s

	Order no.
Probe S	792888

Single-cell, metal-clad sensor, material stainless steel material no. 1.4571

Outer thread	G 1/2
Operating temperature	-25 °C to 80 °C medium temperature
Lead length	Fixed power cable, 2 m
Max. lead length	100 m
Enclosure rating	IP 67
Pressure resistance	30 bar
Adjustment range	1 cm/s to 5 m/s

Required connector parts (T-piece, bypass) must be ordered separately..

2.8 Application Examples

2.8.1 Metering Of Highly Viscous Substances

Product:	**Motor pumps**
Metered medium:	**Viscous filler**
Sector:	**Electronics**
Application:	**Part filling**

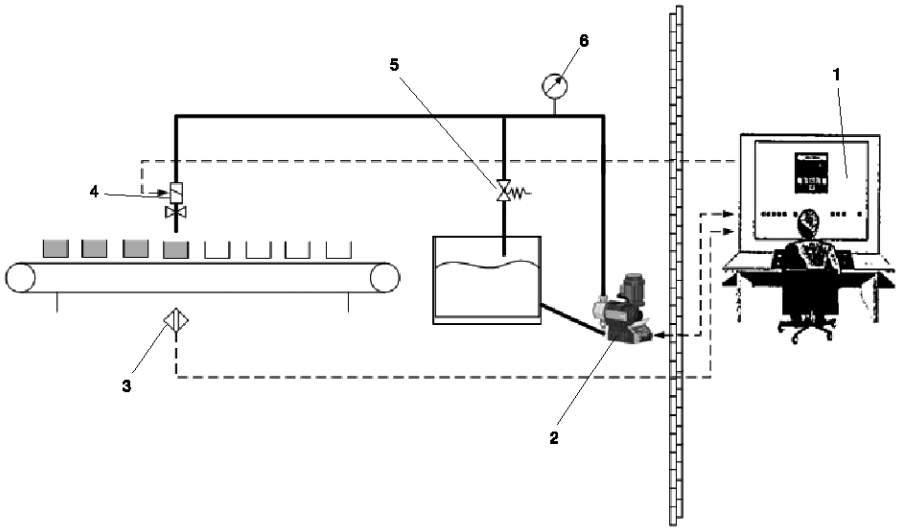

1 Process control system PLS (master)
2 Metering pump, type Sigma (field unit)
3 Proximity switch
4 Solenoid valve
5 Overflow valve
6 Pressure gauge

pk_2_113

Tasks and requirements

- Metering of a viscous filler in templates
- Metering accuracy ±2 %
- Varying filling volumes

Operating conditions

- The templates pass the metering point on a conveyor in „stop and go“ operation.
- The pump is started via a proximity switch at the conveyor (external contact control).

Notes on application

- The start is always to begin with a pressure stroke, i.e. controlled stop of the diaphragm at the end of the suction stroke.
- When varying the filling volume, a stroke length as large as possible is to be chosen - this improves the accuracy.
- Short and stable suction and metering lines, no pulsation damper - thus reduction of the flexible (moved) volume.
- If possible work with feed such that the suction lines are always filled with liquid even during longer idle times.
- In order to prevent dripping of the residual quantities, a solenoid valve is required for filling.

Solution

- Metering pump type Sigma Control version with PROFIBUS® connection
- Overflow valve, solenoid valve

Benefit

- Monitoring of the metering pump and setting of the dosing amount (number of strokes) by PLS in the control centre
- Less electrical installation work required
- Integration into the complete process flow through PROFIBUS®
- Safe and precise metering thanks to overflow and solenoid valves

2.8 Application Examples

2.8.2 Mixing Two Reagents

Product:	**Motor pumps, solenoid pumps**
Metered medium:	**Chlorine activator, oxidant (NaOCl)**
Sector:	**Process industry, power stations**
Application:	**Biocide handling in cooling water systems**

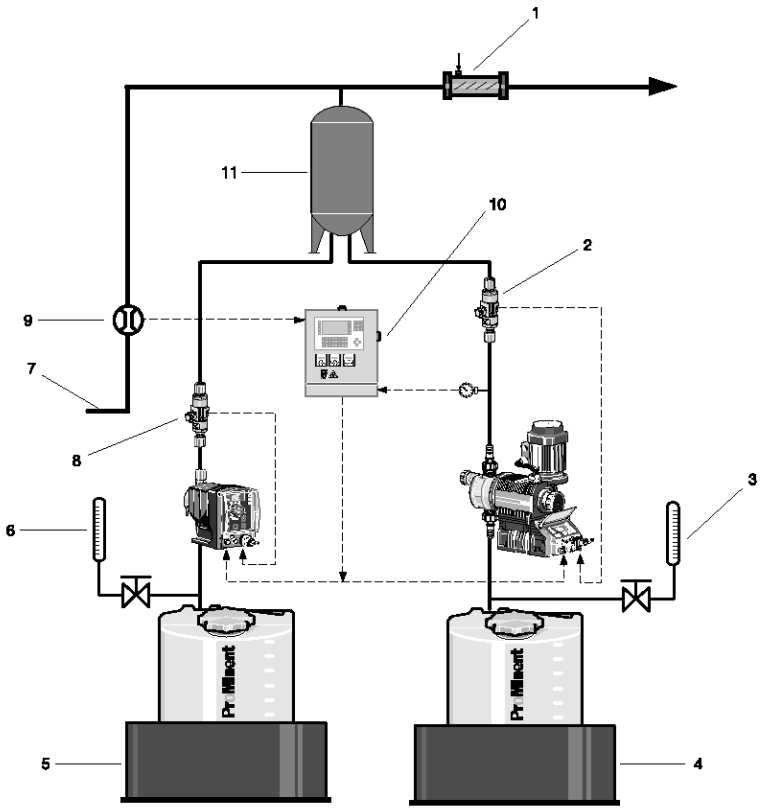

1 Static mixer
2 Flow Control
3 Feed measuring unit
4 NaOCl solution
5 Chlorine activator
6 Feed measuring unit
7 Motive water
8 Flow Control
9 Flow rate measurement
10 Control cabinet
11 Reaction chamber

pk_2_114_1

Tasks and requirements

- Biocide treatment of cooling water systems used in combination with chlorination process.
- Chlorine activator is mixed with NaOCl to produce hyprobromide acid (HOBr) as an active biocide compound. HOBr is particularly effective at pH values in the range from 7.5 to 9.0.
- A level of 0.5 g/m^3 of active HOBr over a period of 1 hour is to be secured twice a day for the purpose of disinfecting the cooling water.

Operating conditions

- Biologically polluted water
- Automatic activation of metering pumps

Application information

- The mixing ratio of chlorine activator and NaOCl (12.5 % solution) is 10 l to 26 – 52 l. The exact composition is to be determined by means of tests (at customer).
- Metering pump with timer function activates the second pump and is therefore responsible for batch metering.
- Motor pump is protected against overload by a pressure gauge with pressure switch. The pressure gauge is connected to the control system.
- The control system monitors the installation and switches off the flow meter in response to corresponding signals (fault signalling).

2.8 Application Examples

Solution

- gamma/ L metering pump with timer function (possibly with external timer)
- Sigma/ 1 metering pump, control version
- Feed monitoring, flow control
- Feed measuring facility
- Pressure gauge with pressure switch

Benefits

- Efficient disinfection in water containing alkali and ammoniac
- Inexpensive raw material basis that is also stable and non-corrosive
- High degree of reliability ensured by flow monitoring
- Simple and effective facility for optimising the chemical composition in connection with feed measuring device

2.8 Application Examples

2.8.3 Safe And Reliable Chemical Metering With Reduced Pulsation

Product:	**Metering pump, accessories**
Metered medium:	**High-viscosity chemicals**
Application:	**Use of pulsation damper (PD)**

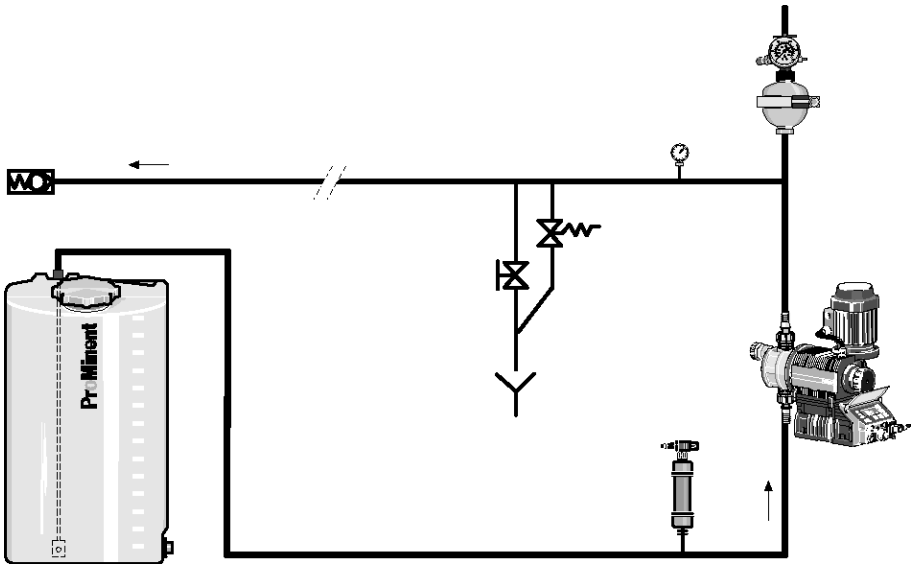

pk_2_117

Tasks and requirements

- For process-technical reasons, a low-pulsation metering flow is desired.
- Mass accelerating forces during metering, caused by the oscillating movement of the displacement body in connection with the piping geometry, must be reduced.
- Cavitation-free process flow

Operating conditions/environment

- Long suction/discharge lines
- Line cross-section with small dimensions
- Metering of high-viscosity, inert media

Notes on application

- Pressure surges increase with increasing metering line length and smaller diameter; these may result in impermissible pressure peaks.
- For longer pipings as well as for media of higher viscosity, the need for a PD use using a piping calculation programme is to be evaluated.
- In an oscillating motor metering pump, the maximum flow rate is approx. 3 times greater than the mean, in a solenoid pump approx. 5 times as great. This is to be considered when designing pipings without PD.
- PD should be preloaded with compressed air or nitrogen at approx. 60-80 % of the operating pressure to be expected.

Solution

- ProMinent® metering pumps
- Pressure-relief/overflow valves
- Pulsation dampers

Benefit

- Safe installation which prevents damages to pumps and pipings
- Precise metering through avoiding cavitation
- Compensation of the delivery flow fluctuations

2.8 Application Examples

3 Process Metering Pumps

Contents Page

3.0 Overview Process Metering Pumps 1
3.0.1 Product Overview 1
3.0.2 Selection Guide 3
3.0.3 Installation Applications 5

3.1 ProMinent EXtronic® Metering Pumps 6
3.1.1 ProMinent EXtronic® Diahpragm Metering Pumps 6
3.1.2 Identcode Ordering System EXBb 8
3.1.3 Spare Parts Kits 9
3.1.4 Ex-Proof Ancillary Equipment 11

3.2 Makro TZ Diaphragm Metering Pumps 14
3.2.1 Makro TZ Motor Driven Diaphragm Metering Pumps 14
3.2.2 Identcode Ordering System TZMb 16
3.2.3 Spare Parts Kits Makro TZ (TZMb) 17

3.3 Makro/ 5 Diaphragm Metering Pumps 20
3.3.1 Makro/ 5 Diaphragm Metering Pumps 20
3.3.2 Identcode Ordering System M5Ma 22
3.3.3 Spare Parts Kits 23

3.4 Hydro Hydraulic Diaphragm Metering Pumps 25
3.4.1 Hydro Hydraulic Diaphragm Metering Pumps 25
3.4.2 Identcode Ordering System HP2a 27
3.4.3 Identcode Ordering System HP3a 29
3.4.4 Spare Parts Kits 30

3.5 Makro TZ Hydraulic Diaphragm Metering Pumps 33
3.5.1 Makro Hydraulic Diaphragm Metering Pumps 33
3.5.2 Identcode Ordering System TZHa 35
3.5.3 Spare Parts Kits 36

3.6 Makro/ 5 Hydraulic Diaphragm Metering Pumps 37
3.6.1 Makro/ 5 Hydraulic Diaphragm Metering Pumps 37
3.6.2 Identcode Ordering System M5Ha 39
3.6.3 Spare Parts Kits 40

3.7 Orlita® MF Hydraulic Diaphragm Metering Pumps 43
3.7.1 Orlita® MF Hydraulic Diaphragm Pump 43
3.7.2 Orlita® MFS 18 (MF1a) Hydraulic Diaphragm Pump 46
3.7.3 Orlita® MFS 35 (MF2a) Hydraulic Diaphragm Pump 48
3.7.4 Orlita® MFS 80 (MF3a) Hydraulic Diaphragm Pump 50
3.7.5 Orlita® MFS 180 (MF4a) Hydraulic Diaphragm Pump 52
3.7.6 Orlita® MFS 600 (MF5a) Hydraulic Diaphragm Pump 54
3.7.7 Orlita® MFS 1400 (MF6a) Hydraulic Diaphragm Pump 56

3.8 Orlita® MH Hydraulic Diaphragm Metering Pumps 58
3.8.1 Orlita® MH Hydraulic Diaphragm Pump With Metal Diaphragm 58

3.9 Sigma/ 2 Plunger Metering Pumps 60
3.9.1 Sigma Plunger Metering Pumps 60
3.9.2 Sigma/ 2 HK Spare Parts Kits 62
3.9.3 Identcode Ordering System SBKa 63
3.9.4 Identcode Ordering System SCKa 64

3.10 Meta Plunger Metering Pumps 65
3.10.1 Meta Plunger Metering Pumps 65
3.10.2 Identcode Ordering System MTKa 67
3.10.3 Spare Parts Kits 68

3 Process Metering Pumps

Contents		Page
3.11	**Makro TZ Plunger Metering Pumps**	**69**
3.11.1	Makro TZ Plunger Metering Pumps	69
3.11.2	Identcode Ordering System TZKa	71
3.11.3	Spare Parts Kits	72
3.12	**Makro/ 5 Plunger Metering Pumps**	**73**
3.12.1	Makro/ 5 Plunger Metering Pumps	73
3.12.2	Identcode Ordering System M5Ka	75
3.12.3	Spare Parts Kits	77
3.13	**Orlita® PS Plunger Metering Pumps**	**78**
3.13.1	ORLITA® PS Plunger Metering Pumps	78
3.14	**Orlita® DR Plunger Metering Pumps**	**80**
3.14.1	ORLITA® DR Valve-Free Plunger Metering Pump	80
3.15	**Process Diaphragm Pump TriPower® MF**	**81**
3.15.1	Process Diaphragm Pump TriPower® MF	81
3.16	**Hydraulic/Mechanical Accessories**	**82**
3.16.1	Return / pressure relief valve, spring-loaded	82
3.16.2	Safety valve	83
3.16.3	Pulsation Dampener	83

3.0 Overview Process Metering Pumps

3.0.1 Product Overview

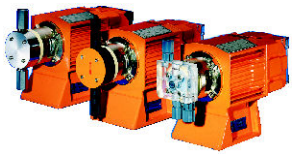

pk_2_131

Diaphragm Metering Pump EXtronic®

The metering of liquid media in explosive areas makes extremely high demands on the components used.

The metering pumps of the series ProMinent EXtronic®, Zone 1, Group II, as well as in the version EXBa S for firedamp-endangered mining operations are optimally designed for use in explosive operating sites.

Capacity range: 0.23 - 60 l/h; 25 - 1.5 bar

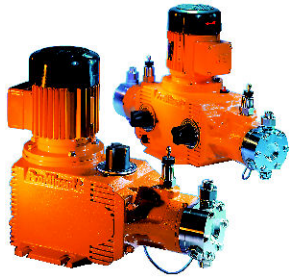

pk_2_132

Hydraulic Diaphragm Metering Pumps Hydro

The optimum solution in the lower capacity range up to 100 bar. The two series Hydro/ 2 and 3 can be flexibly combined as single-end, double end or multiplex station. In the standard version with multilayer safety diaphragm and integrated overflow valve, the pump meets the highest safety requirements.

Standard material combinations

- PVT (PVDF liquid end/PTFE multilayer diaphragm)
- SST (SS liquid end/PTFE multilayer diaphragm)
- HCT (Hastelloy liquid end/PTFE multilayer diaphragm)
- Capacity range Hydro/ 2: 3 - 72 l/h; 100 - 25 bar
- Capacity range Hydro/ 3: 10 - 180 l/h; 100 - 25 bar



pk_2_133

Diaphragm, Hydraulic Diaphragm, Plunger Metering Pumps Makro TZ

The right modular solution for any application, be it simple, mechanical diaphragm pumps or high-tec hydraulic diaphragm pumps or highly robust plunger pumps. In the pressure range up to 10 bar, a.o. highly chemical-resistant plastics for the liquid end types are standardised, e.g. PP, PVC, PTFE.

- Capacity range TZMb (mech. actuated diaphragm pump): 260 - 2.100 l/h; 12 - 4 bar
- Capacity range TZHb (hydr. actuated diaphragm pump): 300 - 1.200 l/h; 16 - 10 bar
- Capacity range TZKa (plunger metering pump): 8 -1.141 l/h; 320 - 11 bar



pk_2_134

Diaphragm, Hydraulic Diaphragm, Plunger Metering Pumps Makro/ 5

The Makro/ 5 is a powerful metering pump for numerous types of applications, available as mechanically linked diaphragm pump, high-tec hydraulic diaphragm pump and highly robust plunger pump.

The basic version can be upgraded with modules to a double liquid end or multiplexed station.

- Capacity range M5Ma (mech. actuated diaphragm pump): 1.540 -4.000 l/h; 4 bar
- Capacity range M5Ha (hydr. actuated diaphragm pump): 450 - 6.000 l/h; 25 - 6 bar
- Capacity range M5Ka (plunger metering pump): 38 - 6.000 l/h; 320 - 6 bar



pk_2_135

Hydraulic Diaphragm Metering Pump Orlita® MF

The metering pumps of the MF series are modular in construction and basically comprise drive mechanism, crank and liquid end as separate functional groups. The hydraulic diaphragm liquid end is equipped with a PTFE dual diaphragm system with integrated rupture indicator. An integrated relief valve protects the pump against overload.

The pumps have an extraordinary suction capacity (up to 8 m suction height).

They guarantee trouble-free operation thanks to a pump-internal overflow and diaphragm protection and thanks to a valveless and almost nonwearing anti-cavitation device.

The standard capacity range of the 6 MF series is: 2 l/h - 28 m^3/h at 700 – 9 bar

3.0 Overview Process Metering Pumps



pk_2_136

Hydraulic Diaphragm Metering Pump Orlita® MH

Like the MF series, this pump is also extremely flexible in its application, however, designed for highest pressures (up to 3.000 bar). The pump ends are equipped with dual stainless steel diaphragms, designed for maximum operational reliability, are low-wear and can be fitted without special tools.

A relief valve as well as an automatic vent valve for the hydraulic chamber are integrated in the pump end. The valveless forced anti-cavitation of leaked hydraulic fluid is non-wearing and guarantees optimum metering accuracy.

The standard capacity range of the 6 Mh series is: 1 - 773 l/h; pressure up to 900 bar (special version up to 3.000 bar).

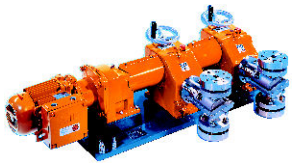

pk_2_137

Plunger Metering Pump Orlita® PS

The PS pump series convinces by a particularly high hydraulic efficiency, excellent self-cleaning, and a low pressure loss. The PS pumps can be used in a wide range of temperatures (up to 400 °C), are easy to maintain, attractively priced and robust.

The plunger packing can also be adjusted in operation using the front clamp screw.

The standard capacity range of the 6 series is: 1 l/h - 37m^3/h; 400 - 8 bar.



pk_2_138

Valveless Plunger Metering Pump Orlita® DR

Valveless plunger-type metering end. It functions by means of a simultaneous oscillating and rotating plunger action. The displacement body itself opens and closes the suction and pressure side. The pump thus does not need any valves and can be operated in a broad stroke frequency range.

This functional principle facilitates very precise metering of high to highly viscous media (up to 1,000,000 mPas). Even liquids with solid fractions can be smoothly metered by the valveless plunger metering pumps. Products with a temperature between -40 °C and +400°C can be continuously delivered from 0-100 %.

The standard capacity range of the 2 series is: 1 - 4,000 l/h; 400 - 4 bar.



P_TR_0005_C

Process Diaphragm Pump TriPower MF

The process diaphragm pump TriPower MF by ProMinent offers high performance with smallest footprint. The pump delivers up to 38 m^3/h at pressures of up to 415 bar. Thanks to the compact TriPower design, the pump has a considerably smaller footprint than conventionally designed pumps.

The proven Orlita® MF liquid head offers optimum safety with PTFE dual diaphragm system and integrated overflow valve.

Standard feed rate range: 4-38 m^3/h; 415-50 bar.

Overview of Process Metering Pumps

Type		EXBb	TZMb	M5Ma	HP2a	HP3a	TZHa	M5Ha	SBKa / SCKa	MTKa	TZKa	M5Ka
Stroke length	mm	1.25	0 - 20	0 - 20	15	15	0 - 20	0 - 50	0 - 15	0 - 15	0 - 20	0 - 50
Connecting rod force	N	2000	8000	10000	2000	4200	8000	10000	1700	2500	8000	10000

Type		S 18	S 35	S 80	S 180	S 600	S 1400	Rb 15	Rb 150
Stroke length	mm	0 - 15	0 - 20	0 - 20	0 - 40	0 - 40	0 - 60	0 - 15	0 - 32
Connecting rod force	N	1750	3500	14000	18000	40000	60000	1800	15000

3.0.2 Selection Guide

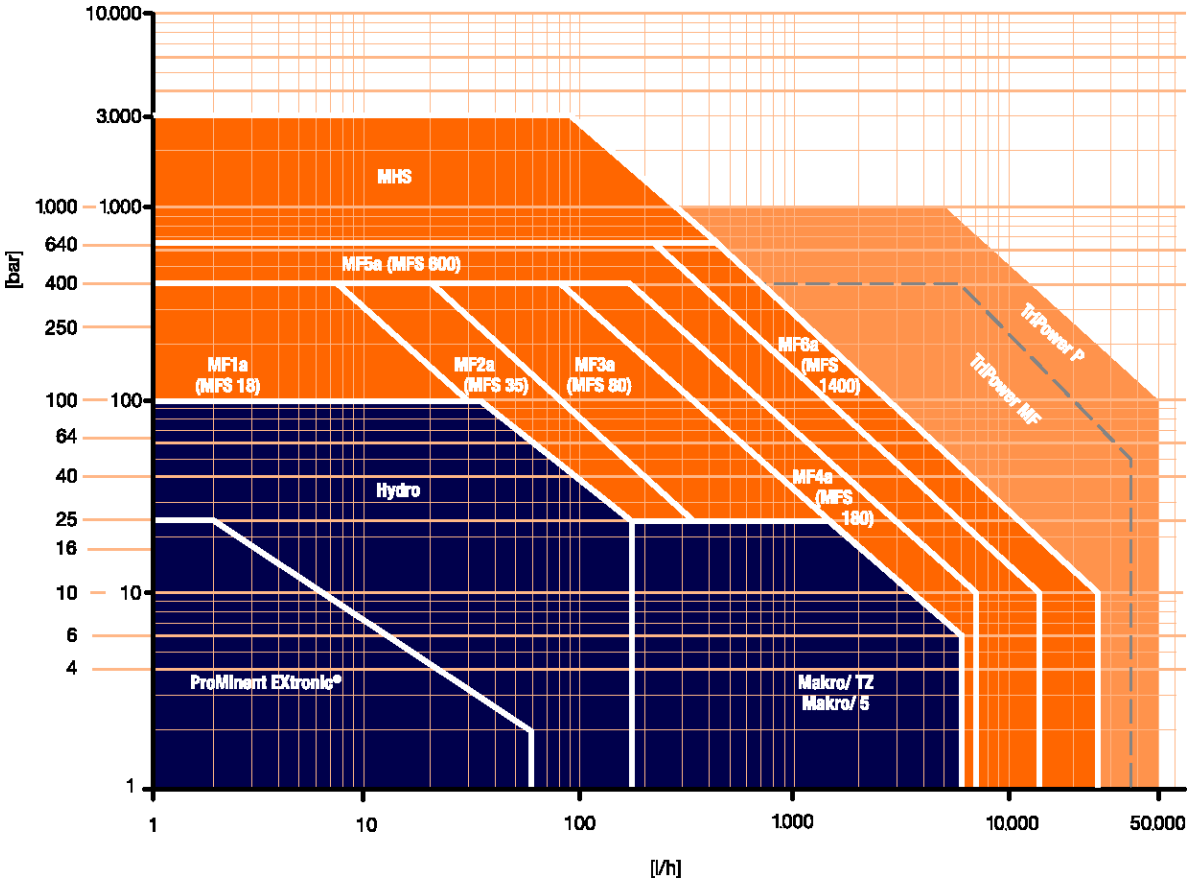

pk_3_07_diagramm
Back pressure [bar]
as a function of feed rate [l/h]

Detail On Orlita® MF Delivery Unit

Pump end with hydraulically displaced diaphragm. The dual PTFE diaphragm hermetically seals off the areas in contact with the product from the hydraulic component.

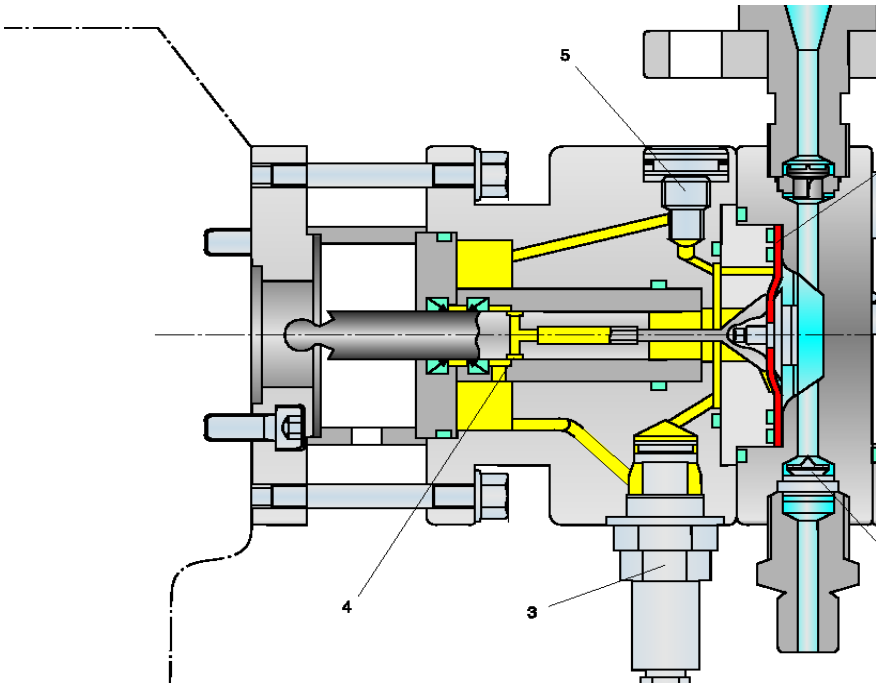

pk_2_142

1 PTFE multilayer safety diaphragm
2 Valves with self-cleaning effect
3 Integrated pressure relief valve
4 Oil anti-cavitation device
5 Gas vent valve

3.0 Overview Process Metering Pumps

3.0.3 Installation Applications

A Oil Industry
- **A1** Well
- **A2** Platform
- **A3** Transportation (tanker, pipeline)
- **A4** Refinery
- **A5** Petrochemical
- **A6** Industry/power plants
- **A7** Filling stations

B Gas Industry
- **B1** Well
- **B2** Gas treatment/gas drying
- **B3** Transportation (tanker, pipeline)
- **B4** Gas storage tank
- **B5** Local distribution/odorization
- **B6** Industry/power plants

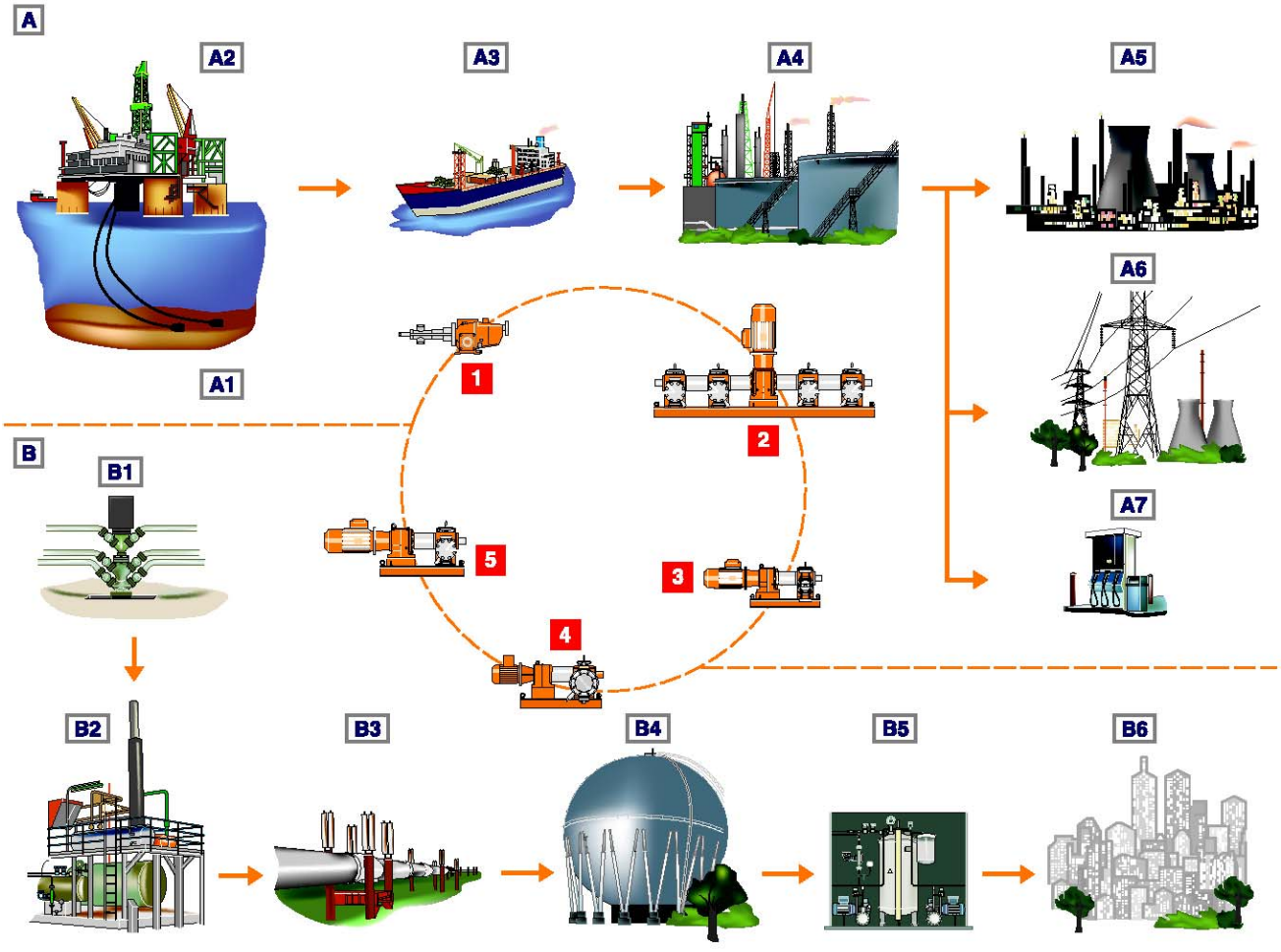

1 Valveless piston-type dosing pump DR

2 Multiplexed dosing pumps

3 Piston-type dosing pump PS

4 Hydraulic diaphragm-driven dosing pump Mh (metal diaphragm)

5 Hydraulic diaphragm-driven dosing pump Mf (PTFE diaphragm)

pk_3_07

3.1 ProMinent EXtronic® Metering Pumps

3.1.1 ProMinent EXtronic® Diahpragm Metering Pumps

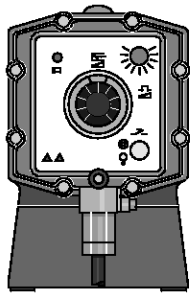

pk_1_020

Control type „Internal“ Stroke length adjustment 1:10, Stroking rate adjustment 1:25, total adjustment range 1:250.

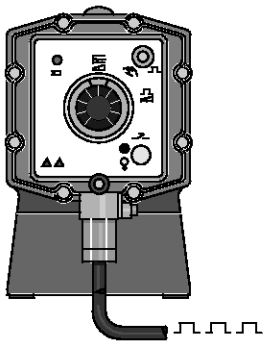

pk_1_019

Control type „External Contact“ Stroke length adjustment 1:10, Stroke frequency control 0 - 100% dependant upon external switch contacts. *)

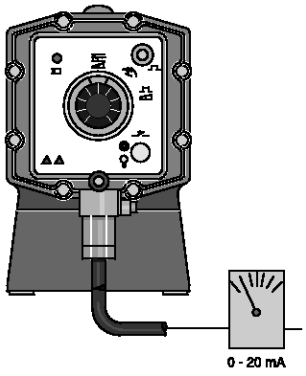

pk_1_018

Control type „Analogue“ Stroke length adjustment 1:10, Stroke frequency control 0-100 % proportional to analogue signal 0/4-20 mA. *)

*) The electrical cables for mains connection, contact or analogue control are already connected to the pump. Observe all instructions concerning connecting and activating electrical systems.

The series ProMinent EXtronic®, approved according to the new EU EX Directive 94/9/EU (ATEX), for metering of liquid media in gas-explosive operating sites as well as firedamp-endangered mining operations.

- Operating voltage 500 V. The application field for ProMinent EXtronic® equipment is thereby expanded, e.g. in conjunction with the new EXBb M version for firedamp-endangered mining operations.
- The short stroke solenoid drive is combined with the liquid ends of the gamma series. The SB material version is recommended for use with flammable media.
- The control inputs „external contact“, „analogue“ and „potential-free ON/OFF“ are available as EXBb intrinsically safe - approved according to EN 50020.
- Type 2501 SSM/SBM with diaphragm failure messaging, e.g. for the use in gas odorisation

The feed rate ranges from 0.19 l/h to 60 l/h at backpressures of up to max. 25 bar.

The ProMinent EXtronic® is tested and approved according to the harmonised EU regulations of EN 50014/50018 for the type of protection „flameproof enclosure“. It possesses the highest degree of protection of this IP rating. This approval is recognised in the EU countries as well as by many other foreign authorities. The short-stroke solenoid and the complete pump control are integrated in the pump housing. Protection against contact and moisture according to DIN 40050 is IP 65, also with opened front cover.

This means:

6 No ingress of dust; complete protection against contact

5 Protection against water projected by a nozzle from any direction

The liquid ends with the proven DEVELOPAN® metering diaphragms with Teflon coating and the proven liquid ends made of plexiglass, polypropylene (PP), PTFE Teflon® stainless steel, material no. 1.4404, and SB for flammable media guarantee highest operating safety, also for the ProMinent EXtronic® .

For outgassing media, self-venting liquid ends made of plexiglass (NS) and PVC (PS) are available.

The micrometer adjusting knob for the stroke length guarantees precise adjustment and a high level of reproducibility. In addition, a comprehensive range of Ex-protected accessories and pump accessories is available.

EXBg G for the use in areas at risk by gasses and vapours IP rating EEx [i, a] d IIC T6

This means:

EEx	-	equipment conforms to European standards
[i, a]	-	control input intrinsically safe if two independent faults occur
d	-	type of protection, flameproof enclosure
IIC	-	explosion group II for all explosion-endangered areas with the exception of mining, sub-group IIC (includes IIA and IIB)
T6	-	temperature class, permissible for gases and vapours with ignition temperature > 85°C

EXBb M for use in firedamp-endangered mining operations (IP rating EEx d I/II C T6)

This means:

EEx	-	equipment conforms to European standards
d	-	type of protection, flameproof enclosure
IC	-	explosion group I for firedamp-endangered mining operations
IIC	-	explosion group II for all other explosion-endangered areas, sub-group IIC (includes IIA and IIB)
T6	-	temperature class, permissible for gasses and vapours with ignition temperature > 85 °C. This is the highest temperature class, it includes T 1 through T5

3.1 ProMinent EXtronic® Metering Pumps

Technical Data

Type	Delivery rate at max. back-pressure			Delivery rate at medium back-pressure			Number of strokes	oØ x iØ	Suction height	Shipping weight PP,NP,TT-SS
	bar	l/h	cm^3/stroke	bar	l/h	ml/stroke	Strokes/min	mm	mWC	kg
EXBb										
1000	10.0	0.19	0.03	5.0	0.27	0.04	120	6 x 4	1.5	12
2501	25.0	1.00	0.15	20.0	1.10	0.17	120	6 x 4	5.0	–
1601	16.0	1.10	0.15	8.0	1.30	0.18	120	6 x 4	5.0	12
1201	12.0	1.70	0.23	6.0	2.00	0.28	120	6 x 4	5.0	12
0803	8.0	3.70	0.51	4.0	3.90	0.54	120	6 x 4	3.0	12
1002	10.0	2.30	0.31	5.0	2.70	0.38	120	8 x 5	5.0	12
0308	3.0	8.60	1.20	1.5	10.30	1.43	120	8 x 5	5.0	12
2502	25.0	2.00	0.28	20.0	2.20	0.31	120	8 x 5	5.0	13
1006	10.0	6.00	0.83	5.0	7.20	1.00	120	8 x 5	5.0	13
0613	6.0	13.10	1.82	3.0	14.90	2.07	120	8 x 5	5.5	13
0417	3.5	17.40	2.42	2.0	17.90	2.49	120	12 x 9	4.5	13
2505	25.0	4.20	0.64	20.0	4.80	0.73	110	8 x 5	5.0	16
1310	13.0	10.50	1.59	6.0	11.90	1.80	110	8 x 5	5.0	16
0814	8.0	14.00	2.12	4.0	15.40	2.33	110	12 x 9	5.0	16
0430	3.5	27.00	4.09	2.0	29.50	4.47	110	DN 10	5.0	16
0260	1.5	60.00	9.09	–	–	–	110	DN 15	1.5	16
EXtronic® metering pumps for high viscosity media										
1002	10.0	2.30	0.31	5.0	2.70	0.38	120	DN 10	1.8	–
1006	10.0	6.00	0.83	5.0	7.20	1.00	120	DN 10	2.0	–
1310	10.0	10.50	1.59	5.0	11.90	1.80	110	DN 15	2.8	–
0814	8.0	14.00	2.12	4.0	15.40	2.33	110	DN 15	2.0	–
EXtronic® metering pumps with self-venting liquid end										
1601	16.0	0.66	0.09	–	–	–	120	6 x 4	1.8	–
1201	12.0	1.00	0.14	–	–	–	120	6 x 4	2.0	–
0803	8.0	2.40	0.33	–	–	–	120	6 x 4	2.8	–
1002	10.0	1.80	0.25	–	–	–	120	6 x 4	2.0	–

* shipping weight for EXBb M version… additional 14 kg

** The data given here represent guaranteed minimum values, achieved with medium water at room temperature.

Materials in contact with medium

	Liquid end	Suction/pressure connector	Seals	Balls (connection 6-12 mm)	Balls (connection DN 10 and DN15)
PP1	Polypropylene	Polypropylene	EPDM	Ceramic	Borosilicate glass
PP4*	Polypropylene	Polypropylene	EPDM	-	Ceramic
NP1	Plexiglass	PVC	FPM A	Ceramic	Borosilicate glass
NP3	Plexiglass	PVC	FPM B	Ceramic	-
NS3**	Plexiglass	PVC	FPM B	Ceramic	-
PS3**	PVC	PVC	FPM B	Ceramic	-
TT1	PTFE with carbon	PTFE with carbon	PTFE	Ceramic	Ceramic
SS ..	Stainless steel W. No. 1.4404	Stainless steel W. No. 1.4404	PTFE	Ceramic	Stainless steel W. No. 1.4404

* PP4 with valve springs made of Hastelloy C

** NS3 and PS3 with valve springs made of Hastelloy C, valve insert made of PVDF
FPM = fluororubber

3.1 ProMinent EXtronic® Metering Pumps

3.1.2 Identcode Ordering System EXBb

EXBb	Enclosure rating								
	G	Gas-EX-proof							
	M	Fire and explosion protection, permitted liquid end material: stainless steel and PTFE							
		Capacity							
			bar	**l/h**					
		1000	10	0.19					
		2501	25	1.00	(only available in SS and SB)				
		1601	16	1.10					
		1201	12	1.70					
		0803	8	3.70					
		1002	10	2.30					
		0308	3	8.60					
		2502	25	2.00	(available in SS and SB only)				
		1006	10	6.00					
		0613	6	13.10					
		0417	4	17.40					
		2505	25	4.20	(only available in SS and SB)				
		1310	13	10.50	(only available in NP, PP4, SS and SB)				
		0814	8	14.00					
		0430	4	27.00					
		0260	2	60.00					
			Liquid end material						
			PP1	Polypropylene with EPDM O-ring					
			PP4	HV Polypropylene for high viscosity liquids with EPDM O-ring and Hastelloy C valve springs (Types 1002, 1006, 1310 and 0814 only)					
			NP1	Acrylic with FPM A O-ring *					
			NP3	Acrylic with FPM B O-ring*					
			NS3	Acrylic with FPM B O-ring*, self bleeding (Types 1601, 1201, 0803 and 1002 only)					
			PS3	PVC with FPM B O-ring*, self bleeding (Types 1601, 1201, 0803 and 1002 only)					
			TT1	PTFE with carbon, PTFE seal					
			SS1	Stainless steel, no. 1.4404, with PTFE seal					
			SS2	Stainless steel with 1/4" NPT internal thread, PTFE seal					
			SB1	Stainless steel with ISO 7 Rp 1/4 internal thread, ISO 7 Rp 1/2 on type 0260, PTFE seal (recommended for flammable materials)					
			SSM	as SS1, with diaphragm rupture indicator Type 2501 only					
			SBM	as SB1, with diaphragm rupture indicator Type 2501 only					
				Valve springs					
				0	No springs				
				1	With 2 valve springs, 1.4571, 0.1 bar				
					Electrical connection				
					A	230 V, 50/60 Hz			
					B	115 V, 50/60 Hz			
					E	500 V, 50/60 Hz			
						Cable length 5 m, open end			
						Control type			
						0	manual stroking rate adjustment via potentiometer		
						1	External contact		
						2	Analogue 0-20 mA		
						3	Analogue 4-20 mA		
						4	External contact, intrinsically safe [i,a]		
						5	Analogue 0-20 mA, intrinsically safe [i,a]		
						6	Analogue 4-20 mA, intrinsically safe [i,a]		
						7	manual with zero volts ON/OFF		
						8	manual with zero volts ON/OFF, intrinsically safe [i,a]		
							Control Variants		
							0	With potentiometer (control type 0, 7 and 8 only)	
							1	With manual auxiliary key for maximum stroking rate (control type 1-6 only)	
							2	With manual auxiliary frequency changer key for maximum stroking rate (control type 1-6 only)	
								Approved/Language	
								0	BVS - Europe, German, 100 V - 500 V
								1	BVS - Europe, English, 100 V - 500 V
								2	FM - USA, English, 115 V
								3	CSA - Canada, English, 115 V, 230 V

* FPM = Fluorine Rubber

3.1 ProMinent EXtronic® Metering Pumps

Connectors

PP, NP, NS, PS and TT	6, 8 and 12 mm	hose sleeve with clamping ring fitting
SS1/SSM stainless steel	6, 8 and 12 mm	Swagelok screw fitting system
SS2 stainless steel	6, 8 and 12 mm	internal thread 1/4“ NPT
SB1/SBM stainless steel	6, 8 and 12 mm	internal thread ISO 7 Rp 1/4
PP and NP	DN 10 and DN 15	hose sleeve d 16 - DN 10 and d 20 - DN 15
TT	DN 10 and DN 15	fusion joint d 16 - DN 10 and d 20 - DN 15 (PVDF)
SS1 stainless steel	DN 10 and DN 15	insert, internal thread R 3/8 and R 1/2
SB1 stainless steel	DN 10 and DN 15	internal thread ISO 7 Rp 1/4 and 1/2

Reproducible metering accuracy ±2 % when correctly installed, refer to operating instructions manual.

±5 % for type 1601 with self bleeding liquid end.

Permissible ambient temperature -20 °C to +45 °C.

Power supply: 500 V ±6 %, 50/60 Hz
230 V ±10 %, 50/60 Hz
115 V ±10%, 50/60 Hz

Protection: IP 65, insulation class F

Medium power consumption at max. stroking rate (W)/peak power consumption at dosing stoke (A) at 230 V, 50/60 Hz:

EXBb	Type 1000, 2501, 1601, 1201, 0803, 1002, 0308	13 W/0.7 A	at 120 strokes/min
EXBb	Type 2502, 1006, 0613, 0417	26 W/1.7 A	at 120 strokes/min
EXBb	Type 2505, 1310, 1014, 0430, 0260	45 W/2.0 A	at 110 strokes/min

Included in delivery: Metering pump with 5 m mains cable, connector set for hose/pipe connections as described in tables.

3.1.3 Spare Parts Kits

Spare parts kits ProMinent EXtronic®

Supplied for PP and NP versions:
1 pump diaphragm
1 suction valve compl.
1 discharge valve compl.
2 valve balls
1 seal set
1 connector set

Supplied for TT-PTFE versions:
1 pump diaphragm
1 suction valve compl.
1 discharge valve compl.
2 valve balls
2 ball seat discs
1 seal set
1 connector set

Supplied for NS3 and PS3 versions:
1 pump diaphragm
1 suction valve compl.
1 connector parts set
1 discharge valve compl.
1 bleeding valve set
1 connector set

Supplied for SS stainless steel versions:
1 pump diaphragm
4 valve balls
4 ball seat discs
1 seal set
1 connector set

3.1 ProMinent EXtronic® Metering Pumps

Pump type	Materials in contact with medium	Order no.
EXBb 1000	PP1	740357
	NP3	740354
	TT	910776
	SS/SK	910777
EXBb 2501	SBM	1020281
	SSM	1020282
EXBb 1601	PP1	740361
	NP3	740358
	NS3/PS3	792033
	TT	910778
	SS/SK	910779
EXBb 2101	PP1	740380
	NP3	740362
	NS3/PS3	792034
	TT	910780
	SS/SK	910781
EXBb 0803	PP1	740384
	NP3	740381
	NS3/PS3	792035
	TT	910782
	SS	910783
EXBb 1002/2502	PP1	740388
	NP3	740385
	NS3/PS3	792036
	TT	910784
	SS	910785
	HV/PP 4 (Type 1002)	910743
EXBb 0308/1006/2505	PP1	740497
	NP1	740498
	TT	910957
	SS	910959
	HV/PP4 (Type 1006)	910939
EXBb 0613/1310	PP1	740504
	NP1	740505
	TT	910969
	SS	910971
	HV/PP4 (Type 1310)	910941
EXBb 0417/0814	PP1	740501
	NP1	740502
	TT	910977
	SS	910979
	HV/PP4 (Type 0814)	910943
EXBb 0430-DN 10	PP1	740507
	NP1	740508
	TT	910993
	SS	910995

Replacement parts set as DN 10 with one way ball valves.

3.1 ProMinent EXtronic® Metering Pumps



pk_1_008

PTFE pump diaphragms

ProMinent® DEVELOPAN® pump diaphragms in EPDM with woven inner layer, integrally vulcanised steel core and PTFE Teflon coating on the side in contact with the dosing chemical.

For pump type	Description	Order no.
1000	31.0 x 6.0	811452
2501	35.0 x 11.5	1000246
1601	48.0 x 9.5	811453
1201	48.0 x 12.5	811454
0803	48.0 x 18.5	811455
1002, 2502	60.0 x 17.0	811456
0308, 2505, 1006	60.0 x 28.0	811457
1310, 0613	76.0 x 37.0	811458
0814, 0417	76.0 x 45.0	811459
0430, 0230	127.5 x 63.0	811460
0260	127.5 x 91.0	811461

3.1.4 Ex-Proof Ancillary Equipment

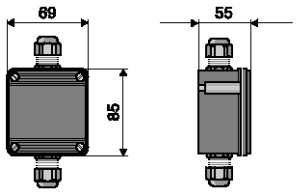

pk_1_023

Plastic terminal box: Type I

IP 66, EEx e II T 6, max. 380 V for mains connection, e.g. of ProMinent EXtronic® in the EX field.

	Order no.
1 input, 1 output for power supply cable. 2 terminals + PE and 2 M 20-12 screw glands	1000071

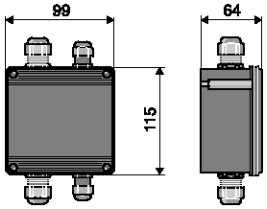

pk_1_021

Plastic terminal box: Type II

IP 6, EEx e II T 6, max. 380 V. As type I, but with additional connector for controller cable (e.g. for contact water meter or DULCOMETER® controller).

	Order no.
2 inputs (mains and controller cable), 2 outputs 2 terminals + PE, 1 partition, 2 terminals and 2 M 20-12 screw glands and 2 M 16-0.8 screw glands	1000072

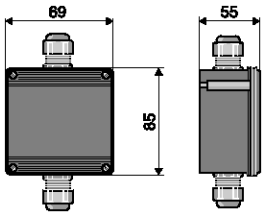

pk_1_022

Plastic terminal box: EExi Type I

IP 66, EEx ia II T 6 for intrinsically safe controller cable

	Order no.
1 input, 1 output for controller cable, 2 terminals and 2 M 16-0.8, blue screw glands	1000073

3.1 ProMinent EXtronic® Metering Pumps

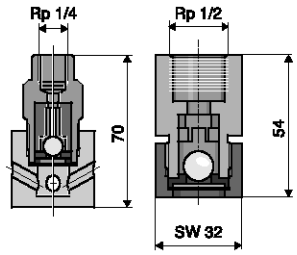

pk_1_30 / pk_1_031

Stainless steel foot valve 1.4404 „SB“

With filter and ball check valve, designed for use with flammable materials.
Materials: 1.4404/1.4401/PTFE/ceramic

	Order no.
Connector ISO 7 Rp 1/4 SB version for ProMinent EXtronic®	809301
Connector ISO 7 Rp 1/2 SB version for ProMinent EXtronic®	924561

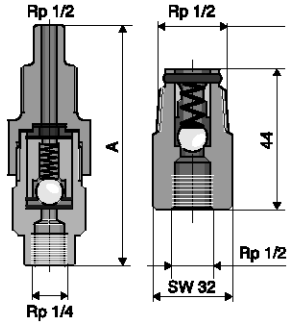

pk_1_032_2 / pk_1_027

Stainless steel 1.4404 „SB“ dosing valve

Spring loaded ball check valve designed for use with flammable materials.
Materials: 1.4404/1.4401/Hastelloy C/PTFE/ceramic

	Order no.
Connector ISO 7 Rp 1/4 - R 1/2, priming pressure approx. 0.5 bar	809302
Connector ISO 7 Rp 1/2 - R 1/2, priming pressure approx. 0.5 bar	924560

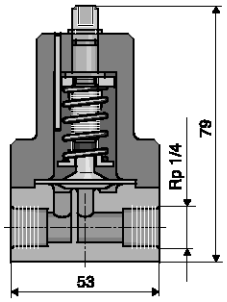

pk_1_029

Adjustable „SB“ back pressure valve

	Order no.
Operating range approx. 1-10 bar, closed version, designed for use with flammable materials.	924555

To generate a constant back pressure for accurate dosing with a free outlet. Can also be used as an overflow valve.

PTFE dosing pipe

Carbon-filled, surface resistance < 10^7 Ω

Material	Length	Connection size o Ø x i Ø	Permissible operating pressure	Order no.
	m	mm	bar	
Carbon-filled PTFE	By the metre	6 x 4	12*	1024831
Carbon-filled PTFE	By the metre	8 x 5	16*	1024830
Carbon-filled PTFE	By the metre	12 x 9	9*	1024832

* permissible operating pressure at 20 °C in accordance with EN ISO 7751, ¼ of the bursting pressure, assuming chemical resistance and correct connection.

Additional ancillary equipment, i.e. foot valves, dosing valves and back pressure valves in the usual material combinations, identical to gamma ancillary equipment and/or for connector DN 15 Vario ancillary equipment.

(Hydraulic/Mechanical Accessories see p. → 2-27)

3.1 ProMinent EXtronic® Metering Pumps

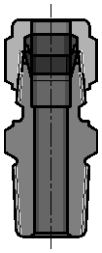

pk_1_028

Stainless steel straight threaded connectors

Swagelok system in stainless steel SS 316 (1.4401) for connection of pipework to liquid ends and valves with internal thread and for SB version.

Normal thread seal compounds required.

	Order no.
6 mm - ISO 7 R 1/4	359526
8 mm - ISO 7 R 1/4	359527
12 mm - ISO 7 R 1/4	359528
16 mm - ISO 7 R 1/2	359529

3.2 Makro TZ Diaphragm Metering Pumps

3.2.1 Makro TZ Motor Driven Diaphragm Metering Pumps

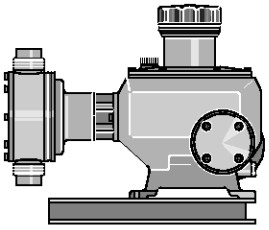

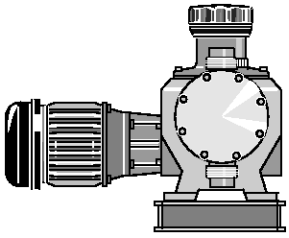

pk_2_012

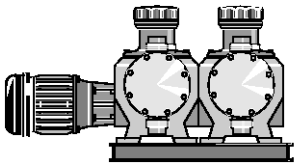

pk_2_013

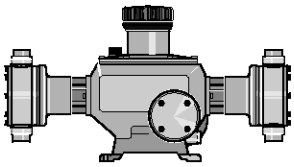

pk_2_014

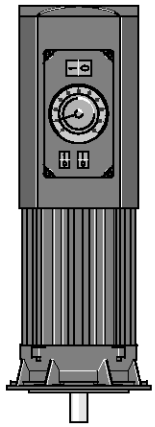

pk_2_103

The Makro TZ diaphragm metering pump is a 0.75 kW dual-wound three phase motor driven metering pump, 230/400 V, 50/60 Hz, enclosure rating IP 55, insulation class F.

The stroke length can be adjusted by means of the shift ring mechanism from 0-10 mm (TZMb), with 0.5 % accuracy. The 5-speed gearbox is encased in a cast, seawater resistant, acrylic resin lacquered housing. Liquid ends are available in different material combinations to suit differing applications. The suction lift varies according to the density and viscosity of the medium, the dimension of the pipework and the pump stroke rate. Reproducibility of metering is better than ±2 % in the stroke length range from 30 % -100 % subject to defined conditions and correct installation. (You must follow the instructions in the operating instruction manual). All motor driven metering pumps must be fitted with appropriate cut-out systems for safety reasons.

Makro TZ TZMbA Add-On Pumps

The Makro TZ main diaphragm metering pump can be converted to a duplex or triplex pump with the Makro TZ add-on diaphragm pump (several add-on pumps can be operated at reduced back pressure). Multiplex pumps can also be retrofitted by the operator; all the necessary components and fittings are included with the TZMbA. Different stroke rates can be achieved with the add-on pump independently of the main pump as each TZMbA has its own reducing gear. The main power end can be fitted for this purpose with a more powerful drive motor. A base frame is required when using add-on power ends.

Makro TZ Double Head Version TZMbD/TZMbB

The double head version of the Makro TZ is similar to the simplex pump.

It is, however, fitted with a second liquid end. The liquid ends work in push-pull mode by means of a coupling element in the gearbox.

Actuation of Makro TZ Metering Pumps

Makro TZ stroke length-actuator/stroke controller

Makro TZ stroke actuator

Stroke adjustment motor for automatic stroke length adjustment, adjustment time approx. 1 sec. for 1 % stroke length, fitted with 2 limit switches for min. /max. setting, 1 k Ω feedback potentiometer; enclosure rating: IP 54. Power supply 230 V (±10 %), 50/60 Hz, 40 W. Mech. stroke length indicator fitted to Makro TZ power end.

Alternative current / higher enclosure rating / Ex-protection to order.

Makro TZ stroke controller

Stroke controller comprising actuator with stroke adjustment motor and integrated microprocessor controller for stroke length adjustment via a standard signal. Technical data see actuator.

Version: Standard 0/4-20 mA current input, corresponds to 0-100 % stroke length. Change over switch for manual/automatic mode. Key switch for stroke adjustment in manual operating mode. 0/4-20 mA actual value output for remote display.

Variable speed motors with integrated frequency converter (Identcode characteristic V)

Power supply 1 ph 230 V, 50/60 Hz, 1.5 kW.

Optional 0/4-20 mA external control. (see Fig. pk_2_103)

(Speed Controllers see p. → 2-51)

Speed controllers in metal housing (Identcode characteristic Z)

The speed controller kit comprises a frequency converter in a separate metal housing and 1.5 kW variable speed motor.

(Speed Controllers see p. → 2-51)

3.2 Makro TZ Diaphragm Metering Pumps

Technical Data

Type TZMbH	With motor 1500 rpm at 50 Hz				With motor 1800 rpm at 60 Hz				Suction height	Connection, suction/ pressure side	Shipping weight PP,NP, TT-SS
	Delivery rate at max. backpressure			Max. stroke rate	Delivery rate at max. backpressure			Max. stroke rate			
	bar	l/h	ml/ stroke	Strokes/ min	psi	l/h	gph	Strokes/ min	mWC	G–DN	kg
120260	12	260	60	72	174	312	82	86	4.0	1 1/2–25	46/54
120340	12	340	60	96	174	408	108	115	4.0	1 1/2–25	46/54
120430	12	430	60	120	174	516	136	144	4.0	1 1/2–25	46/54
120510	12	510	60	144	174	622	164	173	4.0	1 1/2–25	46/54
120650	12	640	60	180	174	–	–	–	4.0	1 1/2–25	46/54
070430	7	430	99	72	100	516	136	86	3.5	2–32	50/64
070570	7	570	99	96	100	684	181	115	3.5	2–32	50/64
070720	7	720	99	120	100	864	228	144	3.5	2–32	50/64
070860	7	860	99	144	100	1,032	273	173	3.5	2–32	50/64
071070	7	1,070	99	180	100	–	–	–	3.5	2–32	50/64
040840	4	840	194	72	58	1,008	266	86	3.0	2 1/4–40	56/80
041100	4	1,100	194	96	58	1,320	349	115	3.0	2 1/4–40	56/80
041400	4	1,400	194	120	58	1,680	444	144	3.0	2 1/4–40	56/80
041670	4	1,670	194	144	58	2,004	529	173	3.0	2 1/4–40	56/80
042100	4	2,100	194	180	58	–	–	–	3.0	2 1/4–40	56/80

Stroke length 10 mm

Polymer version: max. 10 bar back pressure

The admissible priming pressure on the suction side is 50 % of the maximum back pressure.

Materials in contact with medium

			DN 25 ball valves			DN 32/DN 40 plate valves **		
	Liquid end	Suction/pressure connector	Seals	Valve balls	Valve seats	Seals	Valve plates/ valve spring	Valve seats
PPT	Polypropylene	PVDF	PTFE	Borosilicate glass	PTFE	PTFE	Ceramic/ Hast C. + CTFE**	PTFE
PCT	PVC	PVDF	PTFE	Borosilicate glass	PTFE	PTFE	Ceramic/ Hast C. + CTFE**	PTFE
TTT	PTFE with carbon	PVDF	PTFE	Ceramic	PTFE	PTFE	Ceramic/ Hast C. + CTFE**	PTFE
SST	Stainless steel W. No. 1.4404	Stainless steel W. No. 1.4581	PTFE	Stainless steel W. No. 1.4401	PTFE	PTFE	Stainless steel 1.4404/Hast. C	PTFE

Multilayer safety diaphragms with PTFE coating.

** The valve spring is coated with CTFE (similar to PTFE)
Special versions on request.

3.2 Makro TZ Diaphragm Metering Pumps

3.2.2 Identcode Ordering System TZMb

Motor-Driven Metering Pump TZMb Makro TZ 10 (mechanically driven add-on diaphragm pump)

TZMb	Drive type													
	H	Main drive												
	A	Add-on drive												
	D	Double main drive												
	B	Double add-on drive												
		Type*												
		120260	070430	040840										
		120340	070570	041100										
		120430	070720	041400										
		120510	070860	041670										
		120650	071070	042100										
			Material Liquid end**											
			PC	PVC										
			PP	Polypropylene										
			SS	Stainless steel										
			TT	PTFE + 25% carbon										
				Sealing material										
				T	PTFE									
					Displacement body									
					1	Multi-layer safety diaphragm with rupture indicator								
						Liquid end version								
						0	No valve springs							
						1	With valve springs							
							Hydraulic connection							
							0	Standard connection						
							1	PVC union nut and insert						
							2	PP union nut and insert						
							3	PVDF union nut and insert						
							4	SS union nut and insert						
								Version						
								0	with ProMinent® logo					
								2	no ProMinent® logo					
								A	with ProMinent® logo, with frame, simplex					
								B	with ProMinent® logo, with frame, duplex					
								C	with ProMinent® logo, with frame, triplex					
								M	Modified					
									Electrical power supply					
									S	3 ph. 230/400 V 50/60 Hz (WBS)				
									P	3 ph. 230/400 V 60 Hz (Exe, Exd)				
									L	3 ph. 230/400 V 50 Hz (Exe, Exd)				
									R	Variable speed motor4 pole230/400 V				
									V (0)	Variable speed motor with integr. frequency converter				
									V (2)	variable speed motor with integr. frequency converter (Exd)				
									Z	Speed control kit				
									4	No motor, with 56 C flange				
									7	No motor, with 120/80 flange				
									8	No motor, with 160/90 flange				
									0	No motor, externally mounted drive				
										Enclosure rating				
										0	IP 55 (Standard) ISO class F			
										1	Exe version ATEX-T3			
										2	Exd version ATEX-T4			
										A	ATEX power end			
											Stroke sensor			
											0	No stroke sensor		
											1	With stroke sensor (Namur)		
												Stroke length adjustment		
												0	Stroke length adjustment, man.	
												1	230 V stroke actuator	
												2	115 V stroke actuator	
												3	230 V 0-20 mA stroke controller	
												4	230 V 4-20 mA stroke controller	
												5	115 V 0-20 mA stroke controller	
												6	115 V 4-20 mA stroke controller (servo motors for Ex zones on request)	
													Application	
													0	Standard

* Digits 1 + 2=back pressure [bar]; digits 3 - 6=capacity [l/h]

** material version PCT/PPT/TTT max. 10 bar

3.2 Makro TZ Diaphragm Metering Pumps

Motor Data

Identcode characteristic		Voltage supply			Remarks
S	3 ph, IP 55	220-240 V/380-420 V	50 Hz	0.75 kW	
		250-280 V/440-480 V	60 Hz	0.75 kW	
L1	3 ph, II2GEExeIIT3	220-240 V/380-420 V	50 Hz	0.75 kW	
L2	3 ph, II2GEExdIICT4	220-240 V/380-420 V	50 Hz	0.75 kW	with PTC, speed adjustment range 1:5
P1	3 ph, II2GEExeIIT3	250-280 V/440-480 V	60 Hz	0.75 kW	
P2	3 ph, II2GEExdIICT4	250-280 V/440-480 V	60 Hz	0.75 kW	with PTC, speed adjustment range 1:5
R	3 ph, IP 55	230 V/400 V	50/60 Hz	1.5 kW	with PTC, speed adjustment range 1:20 with separate fan 1 ph 230 V ; 50/60Hz
V0	1 ph, IP 55	230 V ±5 %	50/60 Hz	1.1 kW	Variable speed motor with integrated frequency converter
V2	3 ph, II2GEExdIICT4	400 V ±10 %	50/60 Hz	1.5 kW	Ex-variable speed motor with integrated frequency converter

Motor data sheets can be requested for more information.
Special motors or special motor flanges are available on request.

The motors are designed in compliance with the Ecodesign Directive 2005/32/EC (IE2 standard).

Note concerning installation in Ex-zones:

With effect from 01.07.2003, only pumps with a suitable identification and rating plate in accordance with ATEX Directive 94/9/EC may be used in areas with potentially explosive atmospheres. The explosion group, category and degree of protection stated on the rating plate must correspond to, or be higher than, the conditions specified in the intended application.

3.2.3 Spare Parts Kits Makro TZ (TZMb)

The spare parts kit generally includes liquid end consumables.

1 pump diaphragm
1 suction valve assembly.
1 discharge valve assembly
2 valve balls (Multi-layer safety diaphragm DN 32/DN 40 with shim and springs)
1 set of seals (O-rings, ball seat discs, ball seat housings)

Spare Parts Kits

Identcode: 120260, 120340, 120430, 120510, 120650

Delivery unit	Materials in contact with medium	Order no.
FM 650 - DN 25	PCT, PPT, TTT	1025164
	SST	1022896
	SST (without valve cpl.)	1022895

Identcode: 070430, 070570, 070720, 070860, 071070

Delivery unit	Materials in contact with medium	Order no.
FM 1100 - DN 32	PCT, PPT, TTT	1025167
	SST	1022917
	SST (without valve cpl.)	1022916

Identcode: 040840, 041100, 041400, 041670, 042100

Delivery unit	Materials in contact with medium	Order no.
FM 2100 - DN 40	PCT, PPT, TTT	1025169
	SST	1022930
	SST (without valve cpl.)	1022929

3.2 Makro TZ Diaphragm Metering Pumps

Multi-layer safety diaphragm for TZMb

ProMinent® multi-layer safety diaphragm with diaphragm rupture indication and PTFE Teflon coating on the wetted side.

Pump type	Order no.
Identcode: 120260, 120340, 120430, 120510, 120650; Makro TZ FM 650	1022887
Identcode: 070430, 070570, 070720, 070860, 071070; Makro TZ FM 1100	1022900
Identcode: 040840, 041100, 041400, 041670, 042100; Makro TZ FM 2100	1022921

Makro TZ spare parts kits for TZMa

Identcode: 120190, 120254, 120317, 120381

Delivery unit	Materials in contact with medium	Order no.
Liquid end FM 530 - DN 25	PP	910452
	P	910455
	T	910458
	S (without valve cpl.)	910475
	S	910461

Identcode: 060397, 060529, 060661, 060793

Delivery unit	Materials in contact with medium	Order no.
Liquid end FM 530 - DN 25	PP	910453
	P	910456
	T	910459
	S (without valve cpl.)	910476
	S	910462

Identcode: 030750, 031000, 031250, 031500, 031875, 031050 , 031395, 031740, 032100, 032500

Delivery unit	Materials in contact with medium	Order no.
Liquid end FM 1500/2100	PP	1001573
	P	1001574
	T	1001575
	S (without valve cpl.)	1001577
	S	1001576

3.2 Makro TZ Diaphragm Metering Pumps

PTFE pump diaphragms for TZMa

ProMinent® DEVELOPAN® pump diaphragms with a generously-sized steel core vulcanised into fibre reinforced EPDM, with a PTFE Teflon coating on the process-wetted side.

Pump type	Order no.
Identcode: 100190, 120190, 100254, 100317, 120317, 100381, 120381; Makro TZ FM 260	811471
Identcode: 060397, 060529, 060661, 060793; Makro TZ FM 530	811472
Identcode: 030750, 031000, 031250, 031500, 031050, 031395, 031740, 032100, 032500; Makro TZ FM 1500/FM 2100	811473

Note concerning installation in Ex-zones:

With effect from 01.07.2003, only pumps with a suitable identification and rating plate in accordance with ATEX Directive 94/9/EC may be used in areas with potentially explosive atmospheres. The explosion group, category and degree of protection stated on the rating plate must correspond to, or be higher than, the conditions specified in the intended application.

3.3 Makro/ 5 Diaphragm Metering Pumps

3.3.1 Makro/ 5 Diaphragm Metering Pumps

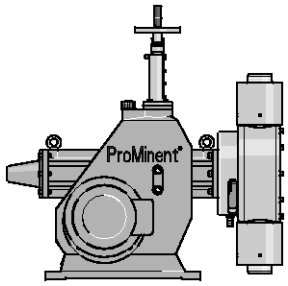

pk_2_099

The Makro/ 5 HM is supplied as standard with a 3 kW spur wheel geared 3-phase motor, 230/400 V, 50/60 Hz, enclosure rating IP 55, insulation class F. The stroke length can be adjusted between 0…20 mm. The gearbox is encased in a seawater resistant acrylic resin lacquered cast housing. The diaphragm liquid ends are available in different material combinations which are suited to different applications (see table). The metering reproducibility under defined conditions and if installed correctly is better than ±2 % in the stroke length range between 30-100 %. The priming lift varies with the density and viscosity of the chemical, the connection pipework and the stroking rate of the pump. For technical safety reasons, appropriate equipment must be installed to prevent current overload (instructions in the operating instruction manual must be followed).

Makro/ 5 Add-On Pump M5MaA

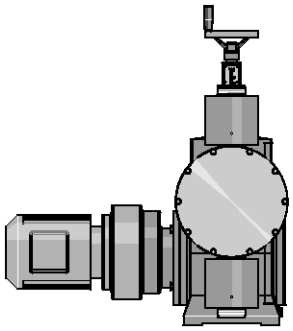

pk_2_093

The Makro/ 5 add on pump can be connected to the Makro/ 5 main power end to form a duplex or triplex pump. (At reduced back pressure, up to four add on power ends can be combined with a main power end.) Add on power ends can be fitted on site. If required, the main drive can be fitted with a 3 kW and/or 5.5 kW motor. You will require a base frame when connecting add on power ends.

Makro/ 5 Double-Head Pump M5MaD M5MaB

Essentially the same instructions apply for the Makro/ 5 HMD and AMD pumps as for single pumps. They are, however, fitted with a second liquid end.

The liquid ends operate in counter-cycle.

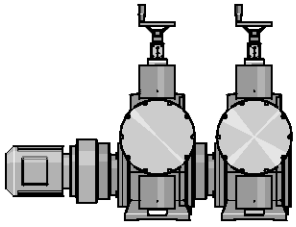

pk_2_098

Makro/ 5 Pump Control

Makro/ 5 stroke length actuator

Servomotor for automatic stroke length adjustment, adjusting time approx. 100 sec. for 100 % stroke length, fitted with 2 limit switches for min./max. settings. Feedback potentiometer 1 k Ohm; enclosure rating: IP 54. Power supply 230 V (±10 %), 50/60 Hz, approx. 40 W, mech. stroke rating display at Makro/ 5 power end.

Custom voltage ratings/higher enclosure ratings/Ex-proof available on request.

Includes:

Standard signal input 0/4-20 mA, (corresponds to stroke length 0-100 %); internal switch for manual/automatic operation, key switch for stroke length adjustment in manual operating mode, actual value output 0/4-20 mA for remote display.

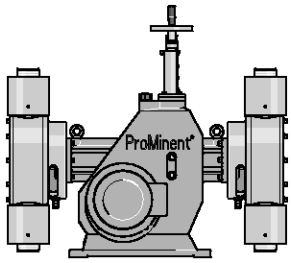

pk_2_095

Frequency converter for speed controller in metal housing, enclosure rating IP 54

Frequency converter encased in safety housing, IP 54, with integrated controller and main switch for the stated motor output.

Optional external control via 0/4-20 mA and/or 0-10 V correspond to 0-50 (60) Hz output frequency.

Integrated controller with versatile functions including switching between external/internal control. In the case of internal control, frequency input via arrow keys, multi-lingual fault message display etc.

Incorporates equipment for monitoring motor temperature (thermistor protection).

Stroke sensor with namur signal

Mounted onto the crank drive of the Makro/ 5 gearbox. For precise detection of each metering stroke, comprising trip cam and inductive proximity switch, Namur-type switch signal. Suitable for batch metering in conjunction with electronic timers and/or for proportional metering in conjunction with proportional controller.

Retrofitting on factory premises only.

Permitted for ex-proof operation with enclosure rating EEx ia ll C T6.

3.3 Makro/ 5 Diaphragm Metering Pumps

Technical Data

Type M5MaH	With motor 1500 rpm at 50 Hz				With motor 1800 rpm at 60 Hz				Suction height	Connection, suction/ pressure side	Shipping weight
	Delivery rate at max. backpressure			Max. stroke rate	Delivery rate at max. backpressure			Max. stroke rate			
	bar	l/h	ml/ stroke	Strokes/ min	psi	l/h	gph	Strokes/ min	mWC	G–DN	kg
041540	4	1,540	427	60	58	1,822	481	71	3.0	2 3/4–50	320
041900	4	1,900	427	75	58	2,254	595	89	3.0	2 3/4–50	320
042600	4	2,600	427	103	58	3,104	820	123	3.0	2 3/4–50	320
043400	4	3,400	427	133	58	4,064	1,074	159	3.0	2 3/4–50	320
044000	4	4,000	427	156	58	–	–	–	3.0	2 3/4–50	320

Stainless steel version: Shipping weight 340 kg

The permissible admission pressure on the intake side is approx. 50 % of the maximum permissible back-pressure.

Materials in contact with medium

			DN 50 plate valves		
	Liquid end	Suction/pressure valve	Seals	Valve plates/valve spring	Valve seats
PPT	Polypropylene	Polypropylene	PTFE	Ceramic/ Hast. C + CTFE**	PTFE
PCT	PVC	PVC	PTFE	Ceramic/ Hast. C + CTFE**	PTFE
TTT	PTFE with carbon	PTFE with carbon	PTFE	Ceramic/ Hast. C + CTFE**	PTFE
SST	Stainless steel W. No. 1.4571/1.4404	Stainless steel W. No. 1.4571/1.4404	PTFE	Stainless steel W. No. 1.4404/Hast. C	PTFE

DEVELOPAN® metering diaphragm with PTFE coating.

** The valve spring is coated with CTFE (similar to PTFE)

Special versions on request.

Motor Data

Identcode characteristic		Voltage supply			Remarks
S	3 ph, IP 55	220-240 V/380-420 V	50 Hz	3 kW	
		250-280 V/440-480 V	60 Hz	3 kW	
L1	3 ph, II2GEExeIIT3	220-240 V/380-420 V	50 Hz	3.6 kW	
L2	3 ph, II2GEExdIICT4	220-240 V/380-420 V	50 Hz	4 kW	with PTC, speed adjustment range 1:5
P1	3 ph, II2GEExeIIT3	250-280 V/440-480 V	60 Hz	3.6 kW	
P2	3 ph, II2GEExdIICT4	250-280 V/440-480 V	60 Hz	4 kW	with PTC, speed adjustment range 1:5
R	3 ph, IP 55	230 V/400 V	50/60 Hz	3 kW	with PTC, speed adjustment range 1:5
V0	3 ph, IP 55	400 V ±10 %	50/60 Hz	3 kW	Variable speed motor with integrated frequency converter
V2	3 ph, II2GEExeIICT4	400 V ±10 %	50/60 Hz	4 kW	Ex-variable speed motor with integrated frequency converter

Motor data sheets can be requested for more information.

Special motors or special motor flanges are available on request.

The motors are designed in compliance with the Ecodesign Directive 2005/32/EC (IE2 standard).

Note concerning installation in Ex-zones:

With effect from 01.07.2003, only pumps with a suitable identification and rating plate in accordance with ATEX Directive 94/9/EC may be used in areas with potentially explosive atmospheres. The explosion group, category and degree of protection stated on the rating plate must correspond to, or be higher than, the conditions specified in the intended application.

3.3 Makro/ 5 Diaphragm Metering Pumps

3.3.2 Identcode Ordering System M5Ma

Motor-Driven Metering Pump M5Ma (mechanically driven diaphragm pump)

M5Ma	Drive type	Type	Material Liquid end	Sealing material	Displacement body	Liquid end version	Hydraulic connection	Version	Electrical power supply	Enclosure rating	Stroke sensor	Stroke length adjustment	Application
	H Main drive	041540	PC PVC	T PTFE	T Pump diaphragm with PTFE coating	1 With valve springs, Hast. C; 0.1 bar	0 Standard connection	0 with ProMinent® logo, no frame	S 3 ph. 230/400 V 50/60 Hz (WBS)	0 IP 55 (Standard) ISO class F	0 No stroke sensor	0 Stroke length adjustment, man.	0 Standard
	D Double main drive	041900	PP Polypropylene				1 PVC union nut and insert	1 without ProMinent® logo, no frame	P 3 ph. 460 V 60 Hz (Exe, Exd)	1 Exe version ATEX-T3	1 With stroke sensor (Namur)	3 230 V 0-20 mA stroke controller	
	A Add-on drive	042600	SS Stainless steel				2 PP union nut and insert	A with ProMinent® logo, with frame, simplex	L 3 ph. 230/400 V 50 Hz (Exe, Exd)	2 Exd version ATEX-T4		4 230 V 4-20 mA stroke controller	
	B Double add-on drive	043400	TT PTFE + 25 % carbon				3 PVDF union nut and insert	B with ProMinent® logo, with frame, duplex	R Variable speed motor 4 pole 230/400 V (R 1:5)	A ATEX power end		5 115 V 0-20 mA stroke controller	
		044000					4 SS union nut and insert	C with ProMinent® logo, with frame, triplex	V (0) Variable-speed motor with integrated frequency converter			6 115 V 4-20 mA stroke controller	
								D with ProMinent® logo, with frame, quadruplex	V (2) Variable speed motor with integr. frequency converter (Exd)				
								M Modified	5 No motor, with IEC 100 gearbox				
									6 No motor, with IEC 112 gearbox				
									0 No motor, no gearbox				

3.3 Makro/ 5 Diaphragm Metering Pumps

3.3.3 Spare Parts Kits

The replacement part kit in general includes the wear parts of the liquid ends.

1 Metering diaphragm
1 Suction valve compl.
1 Pressure valve compl.
2 Valve plate and Hast. C spring
1 Seal kit complete (envelope rings, valve seat/valve seat bushing)

Spare parts kit Makro/ 5 HM

Delivery unit	Order no.
FM 4000 PCT	1008172
FM 4000 PPT	1008171
FM 4000 TTT	1008173
FM 4000 SST (without valves cpl.)	1008174

PTFE metering diaphragm

DEVELOPAN® diaphragm made of EPDM with woven fabric inlay, large-area, vulcanised aluminium core and PTFE-Teflon layer on the side in contact with the medium.

	Order no.
Metering diaphragm for Makro/ 5 FM 4000	1009023

3.4 Hydro Hydraulic Diaphragm Metering Pumps

3.4.1 Hydro Hydraulic Diaphragm Metering Pumps

Hydro main pump H

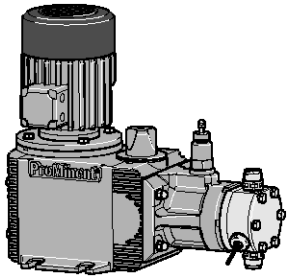

pk_2_074

The hydraulic diaphragm metering pump is a standard sized metering pump with a 0.37/0.75 kW dual wound three phase motor, 230/400 V, 50/60 Hz, enclosure rating IP 55, insulation class F. The stroke length is 15 mm and is adjustable within 1 % accuracy. The cast aluminium housing is combined at any one time with 4 gear reductions. Comes in 2 liquid end sizes and 2 liquid end materials. All pump types are standard sized and fitted with a preset bypass valve integrated into the hydraulics, as well as a multi-layer diaphragm with diaphragm rupture signalling. Metering reproducibility under defined conditions and when installed correctly, is better than ±1 % in a stroke length range of between 20 and 100 % (instructions in the operating instructions manual must be followed precisely).

Hydro double-head version

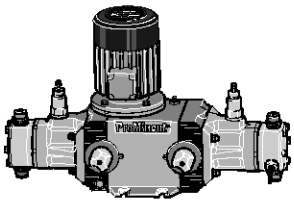

pk_2_073

The double-head version is fitted with a second liquid end which operates on a push-pull action (Boxer principle). Each liquid end is provided with a separate stroke length-adjusting knob so that each liquid end can operate at an independent feed rate.

Hydro add-on pumps

For the Hydro add-on pumps the same basic instructions apply as for the simplex pumps. A main power end can be combined with an add-on power end in both simplex and duplex forms.

Hydro Triplex

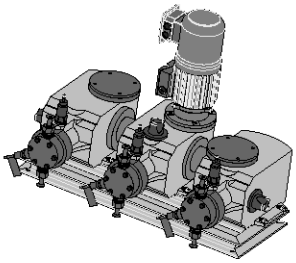

P_PZ_0001_SW1

The Hydro Triplex pump comprises a main drive (arranged centrally) and 2 add-on drives. Typical applications for Triplex pumps include metering applications in medium to upper pressure levels with pulsation reduction. The pulsation damping features are produced by the offset pressure stroke (offset 120° crank angle).

Hydro Pump Controller

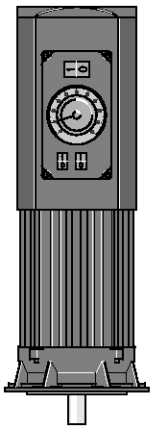

pk_2_103

Stroke length actuator/controller

Actuator with stroke positioning motor for automatic stroke length adjustment. Setting time approx. 1 sec. for 1 % stroke length, fitted with limit switches for min./max. settings. Resistance potentiometer 1 k Ohm for scanning the current setting. Enclosure rating IP 54.

Variable **speed controller** consisting of actuator with stroke positioning motor and inbuilt follower for stroke length adjustment via a standard signal. Standard signal current input 0/4-20 mA, corresponds to stroke length of 0-100 %. Can be switched between manual and automatic operation, key switch for stroke adjustment for manual operation, mechanical position display of stroke length actual value - output 0/4-20 mA for remote display.

Variable speed motors with integrated speed controller (Identcode characteristic V)

Power supply 1 ph, 230 V, 50/60 Hz (HP2a– 0.37 kW; HP3a– 0.75 kW). Can be externally controlled via 0/4-20 mA (see fig. pk_2_103).

The following functions are integrated into the snap on lid (see 2.17.2)

- Start/stop switch
- Manual/external switch
- Potentiometer for speed control during manual operation

Speed controllers with frequency inverter (identcode specification Z)

Frequency converter accommodated in IP 55 protective housing with integral control unit and main switch, suitable for max. 0.37/0.75 kW motor capacity (see Chap. 2.17.2).

Externally controllable with 0/4-20 mA or 0-10 V corresponding to 0-50 (60) Hz output frequency.

The speed controller (complete) comprises a frequency converter and a variable speed motor (see also identcode specification R).

3.4 Hydro Hydraulic Diaphragm Metering Pumps

Technical Data

Type HP2aH	With motor 1500 rpm at 50 Hz				With motor 1800 rpm at 60 Hz			Suction height	Perm. admiss. pressure suction side	Connection on suction/ pressure side	Shipping weight
		Delivery rate at max. backpressure		Max. stroke rate		Delivery rate at max. backpressure	Max. stroke rate				
	bar	l/h	ml/stroke	Strokes/min	psi	l/h / gph	Strokes/min	mWC	bar	G-DN	kg
100003*	100	3	0.8	60	1,450	3.6/1.0	72	3.0	5	Rp 1/4	31
100006*	100	6	0.8	125	1,450	7.0/1.8	150	3.0	5	Rp 1/4	31
100007*	100	7	0.8	150	1,450	8.0/2.1	180	3.0	5	Rp 1/4	31
100009*	100	9	0.8	187	1,450	11.0/2.9	224	3.0	5	Rp 1/4	31
100010*	100	10	0.8	212	–		–	3.0	5	Rp 1/4	31
064007	64	7	2.0	60	928	8.4/2.2	72	3.0	5	G 3/4-10	31
064015	64	15	2.0	125	928	18.0/4.8	150	3.0	5	G 3/4-10	31
064018	64	18	2.0	150	928	21.0/5.5	180	3.0	5	G 3/4-10	31
064022	64	22	2.0	187	928	26.0/6.9	224	3.0	5	G 3/4-10	31
064025	64	25	2.0	212	–		–	3.0	5	G 3/4-10	31
025019	25	19	5.3	60	362	23.0/6.1	72	3.0	5	G 3/4-10**	31
025040	25	40	5.3	125	362	48.0/12.7	150	3.0	5	G 3/4-10**	31
025048	25	48	5.3	150	362	58.0/15.3	180	3.0	5	G 3/4-10**	31
025060	25	60	5.3	187	362	72.0/19.0	224	3.0	5	G 3/4-10**	31
025068	25	68	5.3	212	–		–	3.0	5	G 3/4-10**	31

Material version PVDF max. 25 bar.

* Material version SST/HCT with double ball valve, valve connection on suction/pressure side ** ** HV version for G1-DN 15 designed as standard with internal thread Rp 1/4 and external, thread G 3/4-DN 10

Materials in contact with medium

Material	Liquid End	Suction/Discharge connector	Seals/ball seat	Valve Balls
SST	stainless steel no. 1.4571/1.4404	stainless steel no. 1.4581	PTFE/ZrO_2	stainless steel
PVT	PVDF (Polyvinylidenfluoride)	PVDF (Polyvinylidenfluoride)	PTFE/PTFE	ceramic
HCT	Hast. C	Hast. C	PTFE/Hast. C	ceramic

Motor Data

Identcode characteristic		Voltage supply			Remarks
S	3 ph, IP 55	220-240 V/380-420 V	50 Hz	0.37 kW	
		250-280 V/440-480 V	60 Hz	0.37 kW	
L1	3 ph, II2GEExeIIT3	220-240 V/380-420 V	50 Hz	0.37 kW	
L2	3 ph, II2GEExdIICT4	220-240 V/380-420 V	50 Hz	0.37 kW	with PTC, speed adjustment range 1:5
P1	3 ph, II2GEExeIIT3	250-280 V/440-480 V	60 Hz	0.37 kW	
P2	3 ph, II2GEExdIICT4	250-280 V/440-480 V	60 Hz	0.37 kW	with PTC, speed adjustment range 1:5
R	3 ph, IP 55	230 V/400 V	50/60 Hz	0.37 kW	with PTC, speed adjustment range 1:20 with separate fan 1 ph 230 V ; 50/60Hz
V0	1 ph, IP 55	230 V ±10 %	50/60 Hz	0.37 kW	Variable speed motor with integrated frequency converter
V2	3 ph, II2GEExdIICT4	400 V ±10 %	50/60 Hz	0.55 kW	Ex-variable speed motor with integrated frequency converter

For further information, please request motor data sheets. Customised motors or customised motor flanges are available on request.
The motors are designed in compliance with the Ecodesign Directive 2005/32/EC (IE2 standard).

Note concerning installation in Ex-zones:

With effect from 01.07.2003, only pumps with a suitable identification and rating plate in accordance with ATEX Directive 94/9/EC may be used in areas with potentially explosive atmospheres. The explosion group, category and degree of protection stated on the rating plate must correspond to, or be higher than, the conditions specified in the intended application.

3.4 Hydro Hydraulic Diaphragm Metering Pumps

3.4.2 Identcode Ordering System HP2a

Hydro/ 2 (HP2a)

HP2a	Drive type													
	H	Main drive												
	D	Main drive, Double-head version												
	E	Main drive for add on drive												
	F	Main drive, Double-head version for add-on drive												
	A	Add-on drive												
	B	Double-head version add-on drive												
		Type*												
			bar	**l/h**		**bar**	**l/h**		**bar**	**l/h**				
		100003	100	3	064007	64	7	025019	25	19				
		100006	100	6	064015	64	15	025040	25	40				
		100007	100	7	064018	64	18	025048	25	48				
		100009	100	9	064022	64	22	025060	25	60				
		100010	100	10	064025	64	25	025068	25	68				
			Material Liquid end											
			SS	Stainless steel										
			PV	PVDF (only for 025019 - 025068, 064007 - 064025)										
			HC	Hastelloy C										
				Sealing material*										
				T	PTFE									
					Displacement body*									
					0	Standard multilayer diaphragm with rupture signalling facility								
						Liquid end version								
						0	No valve springs (standard)							
						1	With valve springs							
						D	Double ball valve (only for SST and HCT)							
						H	HV version (only for 025019-025060)							
							Hydraulic connection							
							0	Standard threaded connector						
							E	With DIN ISO flange						
							F	With ANSI flange						
								Version						
								0	with ProMinent® logo					
								1	without ProMinent® logo					
								M	Modified					
									Electrical power supply					
									S	3 ph, 230/400 V, 50/60 Hz, 0,37 kW				
									L	3 ph, 230/400 V, 50 Hz (Exe, Exd), 0.37 kW				
									P	3 ph, 265/400 V, 60 Hz (Exe, Exd), 0.37 kW				
									R	3 ph, Variable speed motor, 230 V/400 V, 0.37 kW				
									V (0)	Variable speed motor with integrated frequency converter				
									V (2)	Variable speed motor with integr. frequency converter (Exd)				
									Z	1 ph, Variable speed control set, 230 V, 50/60 Hz				
									3	No motor, with B 5 flange, size 71				
									4	No motor, with C 56 flange, (NEMA)				
									0	Add on drive				
										Enclosure rating				
										0	IP 55 (standard)			
										1	Exe motor version ATEX-T3			
										2	Exde motor version ATEX-T4			
										A	ATEX power end			
											Stroke sensor			
											0	No stroke sensor (standard)		
											1	Stroke sensor (for explosion-proof applications)		
												Stroke length adjustment		
												0	Manual (standard)	
												1	With stroke positioning motor, 230 V/50/60 Hz	
												2	With stroke positioning motor, 115 V/60 Hz	
												A	With stroke control motor 0...20 mA 230 V/50/60 Hz	
												B	With stroke control motor 4...20 mA 230 V/50/60 Hz	
												C	With stroke control motor 0...20 mA 115 V/60 Hz	
												D	With stroke control motor 4...20 mA 115 V/60 Hz	
													Hydraulic oil	
													0	Standard
													1	Food products grade
													2	Low temperature to -25 °C

* PVT max. 25 bar

3.4 Hydro Hydraulic Diaphragm Metering Pumps

Technical Data

Type HP3aH	With motor 1500 rpm at 50 Hz				With motor 1800 rpm at 60 Hz			Suction height	Perm. admiss. pressure suction side	Connection suction/ discharge side	Shipping weight
		Delivery rate at max. backpressure		Max. stroke rate		Delivery rate at max. backpressure	Max. stroke rate				
	bar	l/h	ml/ stroke	Strokes/ min	psi	l/h / gph	Strokes/ min	mWC	bar	G–DN	kg
100010*	100	10	2.8	60	1,450	12.0/3.2	72	3.0	5	Rp 3/8–10	41
100021*	100	21	2.8	125	1,450	25.0/6.6	150	3.0	5	Rp 3/8–10	41
100025*	100	25	2.8	150	1,450	30.0/7.9	180	3.0	5	Rp 3/8–10	41
100031*	100	31	2.8	187	1,450	37.0/9.8	224	3.0	5	Rp 3/8–10	41
100035*	100	35	2.8	212	1,450		–	3.0	5	Rp 3/8–10	41
064019	64	19	5.3	60	928	23.0/6.1	72	3.0	5	G 3/4–10**	41
064040	64	40	5.3	125	928	48.0/12.7	150	3.0	5	G 3/4–10**	41
064048	64	48	5.3	150	928	58.0/15.3	180	3.0	5	G 3/4–10**	41
064060	64	60	5.3	187	928	72.0/19.0	224	3.0	5	G 3/4–10**	41
064068	64	68	5.3	212	928		–	3.0	5	G 3/4–10**	41
025048	25	48	13.4	60	362	58.0/15.3	72	3.0	5	G 1–15***	41
025100	25	100	13.4	125	362	120.0/31.7	150	3.0	5	G 1–15***	41
025120	25	120	13.4	150	362	144.0/38.0	180	3.0	5	G 1–15***	41
025150	25	150	13.4	187	362	180.0/47.6	224	3.0	5	G 1–15***	41
025170	25	170	13.4	212	362		–	3.0	5	G 1–15***	41

Material version PVDF max. 25 bar.

* Material version SST/HCT with double ball valve, valve connection on suction/pressure side designed as standard with internal thread Rp 3/8 and external, thread G 3/4-DN 10

** HV version with G 1 - DN 15 connection

*** HV version with 1 1/4" DN 20 connection

Materials in contact with medium

Material	Liquid End	Suction/Discharge connector	Seals/ball seal	Valve Balls
SST	Stainless steel no. 1.4571/1.4404	Stainless steel no. 1.4581	PTFE/ZrO_2	Stainless steel
PVT	PVDF (Polyvinylidenfluoride)	PVDF (Polyvinylidenfluoride)	PTFE/PTFE	Ceramic
HCT	Hast. C	Hast. C	PTFE/Hast. C	Ceramic

Motor Data

Identcode characteristic		Voltage supply			Remarks
S	3 ph, IP 55	220-240 V/380-420 V	50 Hz	0.75 kW	
		250-280 V/440-480 V	60 Hz	0.75 kW	
L1	3 ph, II2GEExeIIT3	220-240 V/380-420 V	50 Hz	0.75 kW	
L2	3 ph, II2GEExdIICT4	220-240 V/380-420 V	50 Hz	0.75 kW	with PTC, speed adjustment range 1:5
P1	3 ph, II2GEExeIIT3	250-280 V/440-480 V	60 Hz	0.75 kW	
P2	3 ph, II2GEExdIICT4	250-280 V/440-480 V	60 Hz	0.75 kW	with PTC, speed adjustment range 1:5
R	3 ph, IP 55	230 V/400 V	50/60 Hz	0.75 kW	with PTC, speed adjustment range 1:20 with separate fan 1 ph 230 V ; 50/60 Hz
V0	1 ph, IP 55	230 V ±10 %	50/60 Hz	0.75 kW	Variable speed motor with integrated frequency converter
V2	3 ph, II2GEExdIICT4	400 V ±10 %	50/60 Hz		Ex-variable speed motor with integrated frequency converter

For further information, please request motor data sheets. Customised motors or customised motor flanges are available on request.

The motors are designed in compliance with the Ecodesign Directive 2005/32/EC (IE2 standard).

Note concerning installation in Ex-zones:

With effect from 01.07.2003, only pumps with a suitable identification and rating plate in accordance with ATEX Directive 94/9/EC may be used in areas with potentially explosive atmospheres. The explosion group, category and degree of protection stated on the rating plate must correspond to, or be higher than, the conditions specified in the intended application.

3.4 Hydro Hydraulic Diaphragm Metering Pumps

3.4.3 Identcode Ordering System HP3a

Hydro/ 3 (HP3a)

HP3a	Drive type														
	H	Main drive													
	D	Main drive, Double-head version													
	E	Main drive for add-on drive													
	F	Main drive, Double-head version for add-on drive													
	A	Add-on drive													
	B	Double-head version add-on drive													
		Type*													
			bar	**l/h**			**bar**	**l/h**			**bar**	**l/h**			
		100010	100	10	064019		64	19	025048		25	48			
		100021	100	21	064040		64	40	025100		25	100			
		100025	100	25	064048		64	48	025120		25	120			
		100031	100	31	064060		64	60	025150		25	150			
		100035	100	35	064068		64	68	025170		25	170			
			Material Liquid end												
			SS	Stainless steel											
			PV	PVDF (max. 25 bar, only for 025048 - 025170, 064019 - 064068)											
			HC	Hastelloy C											
				Sealing material*											
				T	PTFE										
					Displacement body*										
					0	Standard multilayer diaphragm with rupture signalling facility									
						Liquid end version									
						0	No valve springs (standard)								
						1	With valve springs								
						D	Double ball valve (for 100010-100035, 064019-064060, only for SST and HCT)								
						H	HV-Version								
							Hydraulic connection								
							0	Standard threaded connector							
							E	With DIN ISO flange							
							F	With ANSI flange							
								Version							
								0	with ProMinent® logo						
								1	without ProMinent® logo						
								M	Modified						
									Electrical power supply						
									S	3 ph, 230/400 V, 50/60 Hz, 0.75 kW					
									L	3 ph, 230/400 V 50 Hz (Exe, Exd), 0.75 kW					
									P	3 ph, 265/440 V 60 Hz (Exe, Exd), 0.75 kW					
									R	3 ph, variable speed motor, 230 V/400 V, 0.75 kW					
									V (0)	Variable speed motor with integrated frequency converter					
									V (2)	Variable speed motor with integr. frequency converter (Exd)					
									Z	1 ph, variable speed control set, 230 V, 50/60 Hz					
									3	No motor, with B 5 flange, size 80					
									4	No motor, with C 56 flange, (NEMA)					
									0	Add on drive					
										Enclosure rating					
										0	IP 55 (standard)				
										1	Exe motor version ATEX-T3				
										2	Exd motor version ATEX-T4				
										A	ATEX power end				
											Stroke sensor				
											0	No stroke sensor (standard)			
											1	Stroke sensor (for explosion-proof applications)			
												Stroke length adjustment			
												0	Manual (Standard)		
												1	With stroke positioning motor, 230 V/50/60 Hz		
												2	With stroke positioning motor, 115 V/60 Hz		
												A	With stroke control motor 0-20 mA 230 V/50/60 Hz		
												B	With stroke control motor 4-20 mA 230 V/50/60 Hz		
												C	With stroke control motor 0-20 mA 115 V/60 Hz		
												D	With stroke control motor 4-20 mA 115 V/60 Hz		
													Hydraulic oil		
													0	Standard	
													1	Food products grade	
													2	Low temperature to -25 °C	

* PVT max. 25 bar

3.4 Hydro Hydraulic Diaphragm Metering Pumps

3.4.4 Spare Parts Kits

The spare parts kits generally include liquid end consumables.

Supplied as standard for SST/HCT stainless steel material version

1 metering diaphragm
2 valve balls
1 seal set

Supplied as standard for PVT material version

1 metering diaphragm
1 suction connector set
1 discharge connector set
2 valve balls
1 seal set

Spare parts kits Hydro/ 2

Applies to identcode: Type 100010, 100009, 100007, 100006, 100003, 064025, 064022, 064018, 064015, 064007

Delivery unit	Materials in contact with medium	Order no.
FMH 25 - DN 10	PVT	1005548
	SST	1005549
	HCT	1009571
	SST (with valve set)	1005550
	SST (for double ball valves)	1029260

Applies to identcode: Type 025068, 025060, 025048, 025040, 025019

Delivery unit	Materials in contact with medium	Order no.
FMH 60 - DN 10	PVT	1005552
	SST	1005553
	HCT	1009573
	SST (with valve set)	1005554
	SST (for double ball valves)	1005555

Spare parts kits Hydro/ 3

Applies to identcode: Type 100035, 100031, 100025, 100021, 100010, 064068, 064060, 064048, 064040, 064019

Delivery unit	Materials in contact with medium	Order no.
FMH 60 - DN 10	PVT	1005552
	SST	1005553
	HCT	1009573
	SST (with valve set)	1005554
	SST (for double ball valves)	1005555

Applies to identcode: Type 025170, 025150, 025120, 025100, 025048

Delivery unit	Materials in contact with medium	Order no.
FMH 150 - DN 15	PVT	1005556
	SST	1005557
	HCT	1009575
	SST (with valve set)	1005558

3.4 Hydro Hydraulic Diaphragm Metering Pumps

Hydro/ 2 PTFE dosing diaphragms / 1.4404

Delivery unit	Order no.
FMH 25 applies to identcode (SST): 100010, 100009, 100007, 100006, 100003, 064025, 064022, 064018, 064015, 064007	1005545
FMH 60 applies to identcode (SST): 026068, 025060, 025048, 025040, 025019	1005546

Hydro/ 2 Pump diaphragms PTFE/Hast. C coated

Delivery unit	Order no.
FMH 25 Applies to identcode (PVT/HCT): 064025, 064022, 064018, 064015, 064007	1006481
FMH 60 Applies to identcode: 025068, 025060, 025048, 025040, 025019	1006482

Hydro/ 3 pump diaphragm PTFE/1.4404

Delivery unit	Order no.
FMH 60 Applies to identcode (SST): 064068, 064060, 064048, 064040, 064019, 100035, 100031, 100025, 100021, 100010	1005546
FMH 150 Applies to identcode (SST): 025170, 025150, 025120, 025100, 025048	1005547

Hydro/ 3 pump diaphragm PTFE/Hastelloy C coated

Delivery unit	Order no.
FMH 60 Applies to identcode (PVT/HCT): 064068, 064060, 064048, 064040, 064019	1006482
FMH 150 Applies to identcode (PVT/HCT): 025170, 025150, 025120, 025100, 025048	1006483

3.4 Hydro Hydraulic Diaphragm Metering Pumps

3.5 Makro TZ Hydraulic Diaphragm Metering Pumps

3.5.1 Makro Hydraulic Diaphragm Metering Pumps

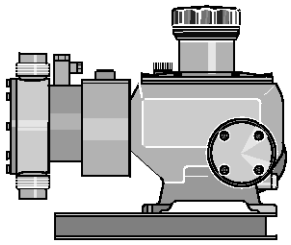

pk_2_021

The Makro TZ is fitted as standard with a 230/400 V dual-wound three phase motor, 50/60 Hz, 1.5 kW, enclosure rating IP 55, insulation class F. The stroke length is 20 mm and can be adjusted with 0.5 % precision. The worm gear and shift ring mechanisms, in a choice of 5 reduction ratios, are built into a salt water-resistant and acrylic resin coated cast housing. Liquid ends are available in different material combinations to suit different metering applications (see table). The suction lift varies depending upon the density and viscosity of the feed chemical, and connecting pipe work dimensions. Under defined conditions and providing installation is correct, reproducible metering accuracy is better than ±1 % at a stroke length range of between 10 % and 100 %. (You must follow the instructions in the operating instruction manual)

Makro TZ TZHaA Add-On Pumps

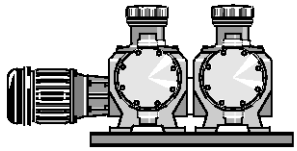

pk_2_022

The Makro TZ main diaphragm metering pump can be converted to a duplex or triplex pump with the Makro TZ add-on diaphragm pump (several add-on pumps can be operated at reduced back pressure). Multiplex pumps can also be retrofitted by the operator; all the necessary components and fittings are included with the TZHaA. Different stroke rates can be achieved with the TZ add-on pump independently of the TZ main pump as each TZ add-on pump has its own reducing gear. The main power end can be fitted for this purpose with a more powerful drive motor. A base frame is required when using add-on power ends.

Makro TZ Double Head Version TZHaD/TZHaB

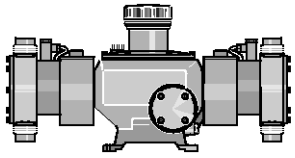

pk_2_023

The double head version of the ProMinent® Makro TZ is similar to the simplex pump. It is, however, fitted with a second liquid end.

The liquid ends work in push-pull mode by means of a coupling element in the gearbox.

Actuation Of Makro TZ Metering Pumps

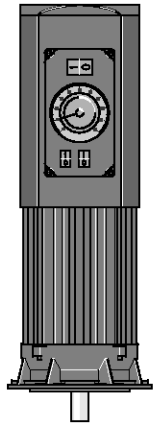

pk_2_103

Makro TZ stroke length-actuator/stroke controller

Makro TZ stroke actuator

Stroke adjustment motor for automatic stroke length adjustment, adjustment time approx. 1 sec. for 1 % stroke length, fitted with 2 limit switches for min. /max. setting, 1 k Ohm feedback potentiometer; enclosure rating: IP 54. Power supply 230 V (±10 %), 50/60 Hz, 40 W. Mech. stroke length indicator fitted to Makro TZ power end.

Alternative current / higher enclosure rating / Ex-protection to order.

Makro TZ stroke controller

Stroke controller comprising actuator with stroke adjustment motor and integrated microprocessor controller for stroke length adjustment via a standard signal. Technical data see actuator.

Version:

Standard 0/4-20 mA current input, corresponds to 0-100 % stroke length. Change over switch for manual/automatic mode. Key switch for stroke adjustment in manual operating mode. 0/4-20 mA actual value output for remote display.

Variable speed motors with integrated frequency converter (Identcode characteristic V)

Voltage supply 3 ph 400 V, 50/60 Hz

Externally controllable with 0/4-20 mA (see Fig. pg_2_103)

(Speed Controllers see p. → 2-51)

Speed controllers in metal housing (Identcode characteristic Z)

The speed controller kit comprises a frequency converter in a separate metal housing and 2.2 kW variable speed motor.

(Speed Controllers see p. → 2-51)

3.5 Makro TZ Hydraulic Diaphragm Metering Pumps

Technical Data

Type TZHa	With motor 1500 rpm at 50 Hz				With motor 1800 rpm at 60 Hz			Suction height	Connection, suction/ pressure side	Shipping weight	Plunger Ø
		Delivery rate at max. backpressure		Max. stroke rate		Delivery rate at max. backpressure	Max. stroke rate				
	bar	l/h	ml/ stroke	Strokes/ min	psi	l/h / gph	Strokes/ min	mWC	G–DN	kg	mm
160300	16	300	69.4	72	232	424.0/112.0	86	3.0	G 1 1/2–25	80*	70
160400	16	400	69.4	96	232	480.0/126.8	115	3.0	G 1 1/2–25	80*	70
160500	16	500	69.4	120	232	600.0/158.5	144	3.0	G 1 1/2–25	80*	70
160600	16	600	69.4	144	232	720.0/190.2	173	3.0	G 1 1/2–25	80*	70
160750	16	750	69.4	180	232		–	3.0	G 1 1/2–25	80*	70
100502	10	502	116.2	72	145	602.0/159.0	86	3.0	G 2 1/4–40	81*	90
100669	10	669	116.2	96	145	802.0/211.9	115	3.0	G 2 1/4–40	81*	90
100836	10	836	116.2	120	145	1,003.0/265.0	144	3.0	G 2 1/4–40	81*	90
101004	10	1,004	116.2	144	145	1,204.0/318.1	173	3.0	G 2 1/4–40	81*	90
101204	10	1,204	116.2	180	145		–	3.0	G 2 1/4–40	81*	90

Custom designs to order.
The permissible admission pressure on the suction side is approx. 50 % of max. permissible back pressure.
Material version PPT/PCT/TTT max. 10 bar.
*** Stainless steel version 95 kg.**

Materials in contact with medium

			DN 25 ball valves			DN 40 plate valves **		
	Liquid end	Suction/pressure connector	Seals	Valve balls	Valve seats	Seals	Valve plates/ valve spring	Valve seats
PPT	Polypropylene	PVDF	PTFE	Borosilicate glass	PTFE	PTFE	Ceramic/ Hast C. + CTFE**	PTFE
PCT	PVC	PVDF	PTFE	Borosilicate glass	PTFE	PTFE	Ceramic/ Hast C. + CTFE**	PTFE
TTT	PTFE with carbon	PVDF	PTFE	Ceramic	PTFE	PTFE	Ceramic/ Hast C. + CTFE**	PTFE
SST	Stainless steel W. No. 1.4571/1.4404	Stainless steel W. No. 1.4581	PTFE	Stainless steel W. No. 1.4401	PTFE	PTFE	Stainless steel 1.4404/Hast. C	PTFE

Patented multilayer diaphragm, vacuum-packed.
** The valve spring is coated with CTFE (similar to PTFE)
Special versions on request.

Motor Data

Identcode characteristic		Voltage supply			Remarks
S	3 ph, IP 55	220-240 V/380-420 V	50 Hz	1.5 kW	
		250-280 V/440-480 V	60 Hz	1.5 kW	
L1	3 ph, II2GEExeIIT3	220-240 V/380-420 V	50 Hz	1.5 kW	
L2	3 ph, II2GEExdIICT4	220-240 V/380-420 V	50 Hz	1.5 kW	with PTC, speed adjustment range 1:5
P1	3 ph, II2GEExeIIT3	250-280 V/440-480 V	60 Hz	1.5 kW	
P2	3 ph, II2GEExdIICT4	250-280 V/440-480 V	60 Hz	1.5 kW	with PTC, speed adjustment range 1:5
R	3 ph, IP 55	230 V/400 V	50/60 Hz	2.2 kW	with PTC, speed adjustment range 1:20 with separate fan 1 ph 230 V ; 50/60 Hz
V0	3 ph, IP 55	400 V ±10 %	50/60 Hz	2.2 kW	Variable speed motor with integrated frequency converter
V2	3 ph, II2GEExdIICT4	400 V ±10 %	50/60 Hz	2.2 kW	Ex-variable speed motor with integrated frequency converter

For further information, please request motor data sheets.
Motor data sheets can be requested for more information. Special motors or special motor flanges are available on request.

The motors are designed in compliance with the Ecodesign Directive 2005/32/EC (IE2 standard).

Note concerning installation in Ex-zones:

With effect from 01.07.2003, only pumps with a suitable identification and rating plate in accordance with ATEX Directive 94/9/EC may be used in areas with potentially explosive atmospheres. The explosion group, category and degree of protection stated on the rating plate must correspond to, or be higher than, the conditions specified in the intended application.

3.5 Makro TZ Hydraulic Diaphragm Metering Pumps

3.5.2 Identcode Ordering System TZHa

Makro TZ 20 hydraulic diaphragm pump

TZHa	Drive type													
	H	Main drive												
	A	Add-on drive												
	D	Double main drive												
	B	Double add-on drive												
		Type*												
		160300	100502											
		160400	100669											
		160500	100836											
		160600	101004											
		160750	101204											
			Material Liquid end											
			PC	PVC										
			PP	Polypropylene										
			SS	Stainless steel										
			TT	PTFE + 25% carbon										
				Sealing material*										
				T	PTFE									
					Displacement body*									
					T	PTFE coating composit diaphragm, with rupture indicator								
						Liquid end version								
						0	No valve springs							
						1	With valve springs							
							Hydraulic connection							
							0	Standard connection						
							1	PVC union nut and insert						
							2	Union nut and insert PP						
							3	PVDF union nut and insert						
							4	SS union nut and insert						
								Version						
								0	with ProMinent® logo, no frame					
								2	no ProMinent® logo, no frame					
								A	with ProMinent® logo, with frame, simplex					
								B	with ProMinent® logo, with frame, duplex					
								C	with ProMinent® logo, with frame, triplex					
								M	Modified					
									Electrical power supply					
									S	3 ph. 230/400 V 50/60 Hz (WBS)				
									P	3 ph. 230/400 V 60 Hz (Exe, Exd)				
									L	3 ph. 230/400 V 50 Hz (Exe, Exd)				
									R	Variable speed motor 4 pole 230/400 V				
									V (0)	Variable speed motor with integr. frequency converter				
									V (2)	With integrated frequency converter (Exd)				
									Z	1 ph, variable speed control set 1 ph, 230 V, 50/60 Hz				
									4	No motor, with 56 C flange				
									7	No motor, with 120/80 flange				
									8	No motor, with 160/90 flange				
									0	Externally mounted drive				
										Enclosure rating				
										0	IP 55 (Standard) ISO class F			
										1	Exe version ATEX-T3			
										2	Exd version ATEX-T4			
										A	ATEX power end			
											Stroke sensor			
											0	No stroke sensor		
											1	With stroke sensor (Namur)		
												Stroke length adjustment		
												0	Stroke length adjustment, man.	
												1	230 V stroke actuator	
												2	115 V stroke actuator	
												3	230 V 0-20 mA stroke controller	
												4	230 V 4-20 mA stroke controller	
												5	115 V 0-20 mA stroke controller	
												6	115 V 4-20 mA stroke controller	
													Application	
													0	Standard
													3	Low temperature to -25 °C

* Material version PCT/PPT/TTT max. 10 bar

3.5 Makro TZ Hydraulic Diaphragm Metering Pumps

3.5.3 Spare Parts Kits

Spare parts kits Makro TZ (TZHa)

The spare parts kits generally includes liquid end consumables.

1 dosing diaphragm
1 suction valve set
1 discharge valve set
2 valve balls (DN 40 with plate and Hast. C springs)
1 seal set (O rings, valve seat, valve seat housings)

Identcode: 160300, 160400, 160500, 160600, 160750

Delivery unit	Materials in contact with medium	Order no.
FMH 70 - 20	PPT	911903
	PCT	911901
	TTT	911905
	SST	911908
	SST (no valve cpl.)	911907

Identcode: 100502, 100669, 100836, 101004, 101204

Delivery unit	Materials in contact with medium	Order no.
FMH 90 - 20	PPT	911904
	PCT	911902
	TTT	911906
	SST	911910
	SST (no valve cpl.)	911909

Makro TZ 20 (TZHa) dosing diaphragms for FMH 70-20; 90-20

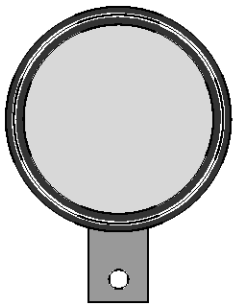

pk_2_024

	Order no.
metering diaphragm, patented composite diaphragm, vacuum packed	1007298

3.6 Makro/ 5 Hydraulic Diaphragm Metering Pumps

3.6.1 Makro/ 5 Hydraulic Diaphragm Metering Pumps

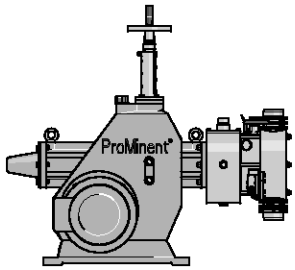

pk_2_096

The Makro/ 5 HMH is driven as standard by a 3 kW spur wheel geared motor, 230/400 V, 50/60 Hz, enclosure rating IP 55, insulation class F. The stroke length can be adjusted between 0…50 mm. The gearbox is encased in a seawater resistant acrylic resin lacquered cast housing. The diaphragm liquid ends are available in different material combinations which are suited to different applications (see table). The metering reproducibility under defined conditions and if installed correctly is better than ±1 % in the stroke length range between 10-100 % (you must read notes in the operating instructions). The priming lift varies with the density and viscosity of the chemical, the connection pipework and the stroking rate of the pump. For technical safety reasons, appropriate equipment must be installed to prevent current overload (you must read the notes in the operating instructions).

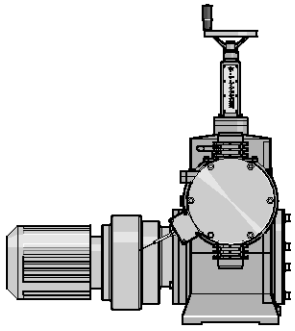
pk_2_097

Makro/ 5 Add-On Pumps M5Ha A

The ProMinent® Makro/ 5 add on pump can be connected to the Makro/ 5 main power end to form a duplex or triplex pump. (At reduced back pressure, up to four add on power ends can be combined with a main power end). Add on power ends can be fitted on site. If required, the main drive can be fitted with a 3 kW and/or 5.5 kW motor. You will require a base frame when connecting add on power ends.

Makro/ 5 Double Head Version M5HaD (Main Pump) /M5HaB (Add-On Pump)

Essentially the same instructions apply for the Makro/ 5 HMHD and AMHD pumps as for single pumps. They are, however, fitted with a second liquid end.

The liquid ends operate in counter-cycle.

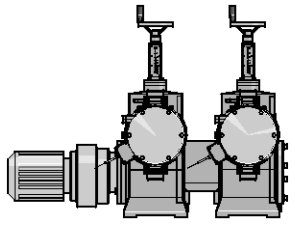
pk_2_094

Makro/ 5 Pump Control

Makro/ 5 stroke length actuator

Servomotor for automatic stroke length adjustment, adjusting time approx. 100 sec. for 100 % stroke length, fitted with 2 limit switches for min./max. settings. Feedback potentiometer 1 k Ohm; enclosure rating: IP 54. Power supply 230 V (± 10%), 50/60 Hz, approx. 40 W, mech. stroke rating display on Makro/ 5 power end.

Custom voltage ratings/higher enclosure ratings/Ex-proof available on request.

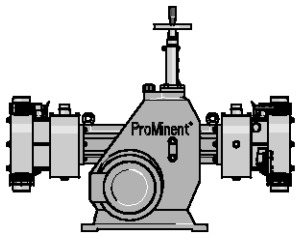

pk_2_092

Makro/ 5 stroke length controller

Controller comprising actuator with servomotor and integrated microprocessor controller for stroke length adjustment via standard signal. Technical data, see actuator.

Includes:

Standard signal input 0/4-20 mA, (corresponds to stroke length 0-100 %); internal switch for manual/automatic operation, key switch for stroke length adjustment in manual operating mode, actual value output 0/ 4-20 mA for remote display.

Frequency control for speed controller, enclosure rating IP 55

Frequency converter encased in safety housing, IP 55, with integrated controller and main switch for the stated motor output.

Optional external control via 0/4-20 mA and/or 0-10 V corresponds to 0-50 (60) Hz output frequency.

Integrated controller with versatile functions including switching between external/internal control. In the case of internal control, frequency input via arrow keys, multi-lingual fault message display etc.

With evaluation equipment for motor temperature monitoring (thermistor protection).

Stroke sensor namur signal

Mounted onto the crank drive of the Makro/ 5 gearbox. For precise detection of each metering stroke, comprising trip cam and inductive proximity switch, Namur-type switch signal. Suitable for batch metering in conjunction with electronic timers and/or for proportional metering in conjunction with proportional controller.

Retrofitting on factory premises only.

Permitted for ex-proof operation with enclosure rating EEx ia II C T6.

3.6 Makro/ 5 Hydraulic Diaphragm Metering Pumps

Technical Data

Type M5HaH	With motor 1500 rpm at 50 Hz				With motor 1800 rpm at 60 Hz				Suction height	Connection suction/ discharge side	Shipping weight	Plunger Ø
	Delivery rate at max. backpressure			Max. stroke rate	Delivery rate at max. backpressure			Max. stroke rate				
	bar	l/h	ml/ stroke	Strokes/ min	psi	l/h	gph	Strokes/ min	mWC	G–DN	kg	mm
250450	25	450	125.0	60	362	537	142	72	3.0	G 2–32	320	60
250562	25	562	125.0	75	362	671	177	89	3.0	G 2–32	320	60
250772	25	772	125.0	103	362	922	244	123	3.0	G 2–32	320	60
250997	25	997	125.0	133	362	1,191	315	159	3.0	G 2–32	320	60
251170	25	1,170	125.0	156	–	–	–	–	–	G 2–32	320	60
160616	16	616	171.2	60	232	736	194	72	3.0	G 2 1/4–40	320	70
160770	16	770	171.2	75	232	920	243	89	3.0	G 2 1/4–40	320	70
161058	16	1,058	171.2	103	232	1,264	334	123	3.0	G 2 1/4–40	320	70
161366	16	1,366	171.2	133	232	1,633	431	159	3.0	G 2 1/4–40	320	70
161602	16	1,602	171.2	156	–	–	–	–	3.0	G 2 1/4–40	320	70
120716	12	716	199.0	60	174	855	226	72	3.0	G 2 1/4–40	320	75
120895	12	895	199.0	75	174	1,069	282	89	3.0	G 2 1/4–40	320	75
121229	12	1,229	199.0	103	174	1,469	388	123	3.0	G 2 1/4–40	320	75
121588	12	1,588	199.0	133	174	1,898	501	159	3.0	G 2 1/4–40	320	75
121862	12	1,862	199.0	156	–	–	–	–	3.0	G 2 1/4–40	320	75
120919	12	919	255.3	60	174	1,098	290	72	3.0	G 2 1/4–40	320	85
121148	12	1,148	255.3	75	174	1,372	362	89	3.0	G 2 1/4–40	320	85
121577	12	1,577	255.3	103	174	1,885	498	123	3.0	G 2 1/4–40	320	85
122037	12	2,037	255.3	133	174	2,435	643	159	3.0	G 2 1/4–40	320	85
122389	12	2,389	255.3	156	–	2,856	754	–	3.0	G 2 1/4–40	320	85
101345	10	1,345	374.0	60	145	1,607	425	72	3.0	G 2 3/4–50	330	100
101680	10	1,680	374.0	75	145	2,008	530	89	3.0	G 2 3/4–50	330	100
102310	10	2,310	374.0	103	145	2,761	729	123	3.0	G 2 3/4–50	330	100
102980	10	2,980	374.0	133	145	3,562	941	159	3.0	G 2 3/4–50	330	100
103500	10	3,500	374.0	156	–	–	–	–	3.0	G 2 3/4–50	330	100
062305	6	2,305	641.0	60	87	2,755	728	72	3.0	Flange–65*	330	130
062880	6	2,880	641.0	75	87	3,443	910	89	3.0	Flange–65*	330	130
063960	6	3,960	641.0	103	87	4,734	1,251	123	3.0	Flange–65*	330	130
065110	6	5,110	641.0	133	87	6,108	1,614	159	3.0	Flange–65*	330	130
066000	6	6,000	641.0	156	–	–	–	–	3.0	Flange–65*	330	130

Material Version PPT/PCT/TTT max. 10 bar

* SST version with G 2 1/2“ thread

Materials in contact with medium

			DN 32/DN 40/ DN 65 plate valves		DN 40 plate valves **
	Liquid end	Suction/pressure valve	Seals	Valve seats	Valve plates/valve spring
PPT	Polypropylene	Polypropylene	PTFE	PTFE	Ceramic/ Hast C. + CTFE**
PCT	PVC	PVC	PTFE	PTFE	Ceramic/ Hast C. + CTFE**
TTT	PTFE with carbon	PTFE with carbon	PTFE	PTFE	Ceramic/ Hast C. + CTFE**
SST	Stainless steel W. No. 1.4571/1.4404	Stainless steel W. No. 1.4571/1.4404	PTFE	PTFE	Stainless steel 1.4404/Hast. C

Patented multilayer diaphragm, vacuum-packed.

Special versions on request.

** The valve spring is coated with CTFE (similar to PTFE)

3.6 Makro/ 5 Hydraulic Diaphragm Metering Pumps

3.6.2 Identcode Ordering System M5Ha

Motor-driven metering pump M5Ha

M5Ha	Drive type												
	H	Main drive											
	A	Add-on power end											
	D	Double main drive											
	B	Double add-on power end											
		Type*											
		250450	160616	120716	120919	101345	062305						
		250562	160770	120895	121148	101680	062880						
		250772	161058	121229	121577	102310	063960						
		250997	161366	121588	122037	102980	065110						
		251170	161602	121862	122389	103500	066000						
			Material Liquid end										
			PC	PVC									
			PP	Polypropylene									
			SS	Stainless steel									
			TT	PTFE + 25 % carbon									
				Sealing material									
				T	PTFE								
					Displacement body								
					T	Composite diaphragm, PTFE coating, with rupture indicator							
						Liquid end version							
						1	With valve springs						
							Hydraulic connection						
							0	Standard connection					
							1	PVC union nut and insert					
							2	Union nut and insert PP					
							3	PVDF union nut and insert					
							4	SS union nut and insert					
								Version					
								0	with ProMinent® logo, no frame				
								1	without ProMinent® logo, no frame				
								A	with ProMinent® logo, with frame, simplex				
								B	with ProMinent® logo, with frame, duplex				
								C	with ProMinent® logo, with frame, triplex				
								D	with ProMinent® logo, with frame, quadruplex				
								M	Modified				
									Electrical power supply				
									S	3 ph. 230/400 V 50/60 Hz (WBS)			
									P	3 ph. 230/400 V 60 Hz (Exe, Exd)			
									L	3 ph. 230/400 V 50 Hz (Exe, Exd)			
									R	Variable speed motor 4 pole230/400 V			
									V (0)	Motor with integr. frequency converter			
									V (2)	Motor with integr. frequency converter (Exd)			
									5	No motor, with gearbox IEC 100			
									6	No motor, with gearbox IEC 112			
									0	No motor, no gearbox			
										Enclosure rating			
										0	IP 55 (Standard) ISO class F		
										1	Exe version ATEX-T3		
										2	Exd version ATEX-T4		
										A	ATEX power end		
											Stroke sensor		
											0	No stroke sensor	
											1	With stroke sensor (Namur)	
												Stroke length adjustment	
												0	Stroke length adjustment, man.
												3	230 V 0-20 mA stroke controller
												4	230 V 4-20 mA stroke controller
												5	115 V 0-20 mA stroke controller
												6	115 V 4-20 mA stroke controller
													Application
													0 Standard
													3 Low temperature to -25 °C

* Material version PC/PP/TT max. 10 bar

3.6 Makro/ 5 Hydraulic Diaphragm Metering Pumps

3.6.3 Spare Parts Kits

Spare parts kits Makro/ 5 HMH

The spare parts kits generally contain the consumable components for the liquid ends.

1 dosing diaphragm
1 suction valve set
1 discharge valve set
1 seal set (O-rings, packing rings, valve seat, valve seat housings)

Identcode: 250450, 250562, 250772, 250997, 251170

Delivery unit	Materials in contact with medium	Order no.
Liquid end FMH 60-50	S (with 2 additional valve assemblies)	1008170
	S (no valve set)	1008169

Identcode: 160616, 160770, 161058, 161366, 161602, 120716, 120895, 121229, 121588, 121862, 120919, 121148, 121577, 122037, 122389

Delivery unit	Materials in contact with medium	Order no.
Liquid end FMH 70/75/85-50	PPT	911904
	PCT	911902
	TTT	911906
	SST	911910
	SST (no valve cpl.)	911909

Identcode: 101345, 101680, 102310, 102980, 103500

Delivery unit	Materials in contact with medium	Order no.
Liquid end FMH 100-50	PP	1008246
	P	1008247
	T	1008248
	S (with valve set)	1008250
	S (no valve set)	1008249

Identcode: 062305, 062880, 063960, 065110, 066000

Delivery unit	Materials in contact with medium	Order no.
Liquid end FMH 130-50	PP	1008251
	P	1008252
	T	1008253
	S (with valve set)	1008265
	S (no valve set)	1008264

Makro/ 5 HMH dosing diaphragms

patented composite diaphragm, vacuum packed

Delivery unit	Order no.
FMH 60/70/75/85–50	1007298
FMH 100/130–50	1007852

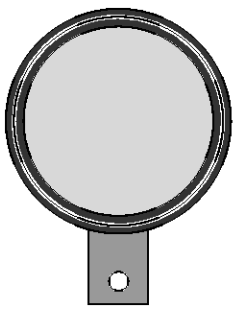

pk_2_024

3.6 Makro/ 5 Hydraulic Diaphragm Metering Pumps

Motor Data

Identcode characteristic		Voltage supply			Remarks
S	3 ph, IP 55	220-240 V/380-420 V	50 Hz	3 kW	
		250-280 V/440-480 V	60 Hz	3 kW	
L1	3 ph, II2GEExellT3	220-240 V/380-420 V	50 Hz	3.6 kW	
L2	3 ph, II2GEExdIICT4	220-240 V/380-420 V	50 Hz	4 kW	with PTC, speed adjustment range 1:5
P1	3 ph, II2GEExellT3	250-280 V/440-480 V	60 Hz	3.6 kW	
P2	3 ph, II2GEExdIICT4	250-280 V/440-480 V	60 Hz	4 kW	with PTC, speed adjustment range 1:5
R	3 ph, IP 55	230 V/400 V	50/60 Hz	3 kW	with PTC, speed adjustment range 1:5
V0	3 ph, IP 55	400 V ±10 %	50/60 Hz	3 kW	Variable speed motor with integrated frequency converter
V2	3 ph, II2GEExellCT4	400 V ±10 %	50/60 Hz	4 kW	Ex-variable speed motor with integrated frequency converter

Motor data sheets can be requested for more information.

Special motors or special motor flanges are available on request.

The motors are designed in compliance with the Ecodesign Directive 2005/32/EC (IE2 standard).

Note concerning installation in Ex-zones:

With effect from 01.07.2003, only pumps with a suitable identification and rating plate in accordance with ATEX Directive 94/9/EC may be used in areas with potentially explosive atmospheres. The explosion group, category and degree of protection stated on the rating plate must correspond to, or be higher than, the conditions specified in the intended application.

3.6 Makro/ 5 Hydraulic Diaphragm Metering Pumps

3.7 Orlita® MF Hydraulic Diaphragm Metering Pumps

3.7.1 Orlita® MF Hydraulic Diaphragm Pump

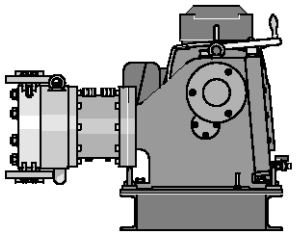

pk_2_121
MfS 600-75

Dosing pumps in the Orlita® MF product range are modular in construction and basically comprise drive mechanism, crank and liquid end as separate functional groups. The hydraulic diaphragm liquid end is equipped with a PTFE dual membrane system with integrated rupture indicator. An integrated pressure relief valve protects the pump from overload. Reproducible metering accuracy under defined conditions and adjusted installation is ±0.5% in the 10-100% stroke length adjustment range.

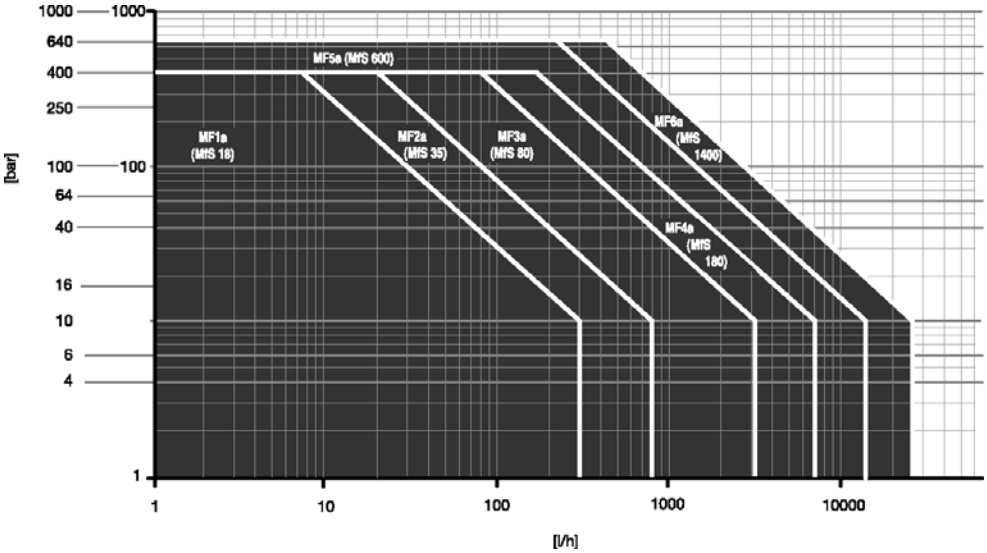

Pressure [bar] as a function of metered quantity [l/h] at 50 Hz

Multiplexed Metering Pumps

The Orlita® MF range's modular construction enables variable combination of drives, motors and liquid ends e.g. quadruple MF dosing pumps with central drive.

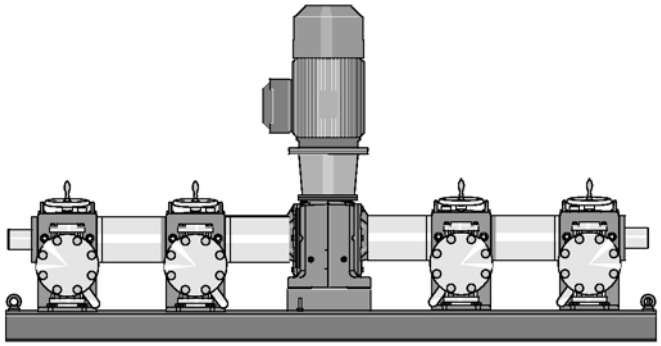

Orlita multiplexed pump

pk_2_128

Triplex Metering Pumps

In triplex dosing pumps, the pressure stroke of each liquid end occurs through 120° of crank travel. This results in a dosing flow free of pulsation without the use of elaborate pulsation dampers. This design of process diaphragm pump is preferred equipment in the chemical and petrochemical industries.

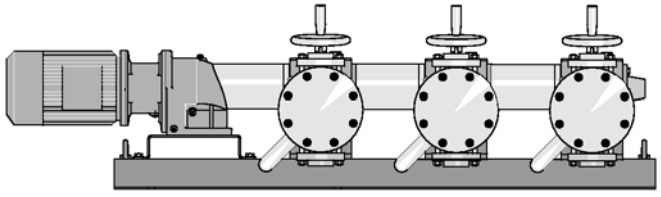

Triplex pump

pk_2_129

3.7 Orlita® MF Hydraulic Diaphragm Metering Pumps

Actuation of ORLITA® MF, MH, PS, DR

Stroke length actuator/controller

Actuator with servo motor for automatic stroke length adjustment, fitted with end switches for min./max. position, 1 kΩ response signal potentiometer for possible tapping of the respective setting. Enclosure rating IP 54.

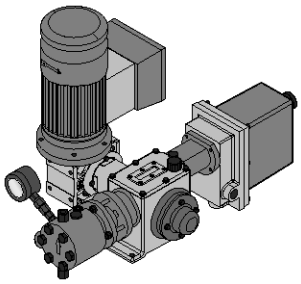

P_PZ_0002_SW

Control drive consisting of an actuator with servo motor and integral follower for stroke length adjustment via a standard signal. Standard signal current input 0/4-20 mA, corresponds to stroke length 0 - 100 %. Switch for manual /automatic operation, key switch for stroke adjustment in manual mode, mechanical status display of actual stroke length value output 0/4-20 mA for remote display.

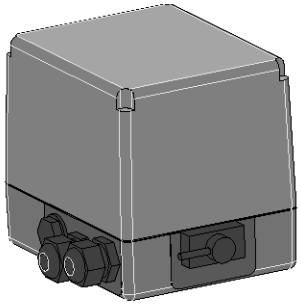

P_ORL_0017_SW

Variable speed motors with integrated frequency converter (identcode specification V)

Power supply 1 ph 230 V, 50/60 Hz (up to 3 kW). Externally controllable with 0/4-20 mA (see Fig. pk_2_103).

The following functions are integrated in the terminal box cover: (see Chapter 2.17.2)

- Start/stop switch
- Switch for manual/external operation
- Potentiometer for speed control in manual mode

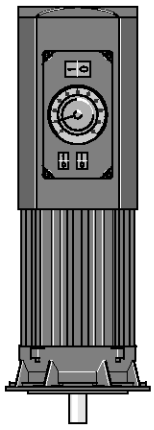

pk_2_103

Speed controllers with frequency inverter (identcode specification Z)

Frequency converter accommodated in IP 55 protective housing with integral control unit and main switch, suitable for max. 0.37/0.75 kW motor capacity (see Chap. 2.17.2).

Externally controllable with 0/4-20 mA or 0-10 V corresponding to 0-50 (60) Hz output frequency.

Integrated controller with versatile functions, such as switching between external/internal control: frequency input using arrow keys with internal control, multilingual fault message display etc. and motor temperature monitoring (thermistor protection).

The speed controller assembly consists of a frequency converter and a variable speed motor.

3.7 Orlita® MF Hydraulic Diaphragm Metering Pumps

Type Of Drive

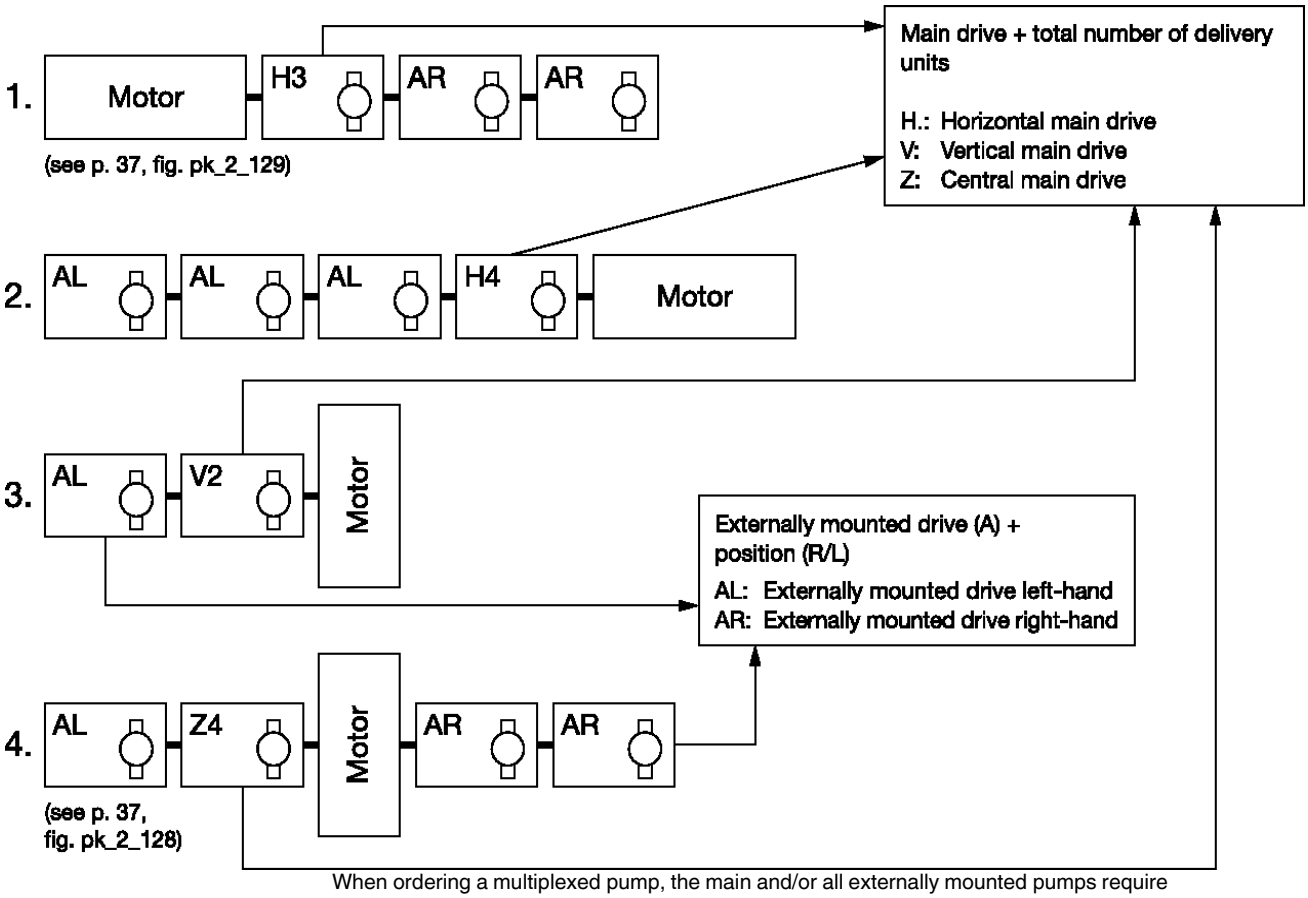

When ordering a multiplexed pump, the main and/or all externally mounted pumps require a separate Identcode.

For example a triplex pumpe (1.) : MF_aH3.....
MF_aAR.....
MF_aAR.....

Materials in contact with medium

	Liquid end	Suction/pressure valve housing	Valve seals	Valve	Valve seat	Range
S1 (DIN)	1.4404	none	1.4571	Ceramic	1.4404	DN 3
S1 (ANSI)	A 316 L	N/A	A 316 Ti	Ceramic	A 316 L	
S1 (DIN)	1.4404	1.4404	1.4571	1.4462	1.4462	≥ DN6
S1 (ANSI)	A 316 L	A 316 L	A 316 Ti	Duplex SS	Duplex SS	
S2 (DIN)	1.4462	1.4462	1.4571	1.4462	1.4462	≥ DN6
S2 (ANSI)	Duplex SS	Duplex SS	A 316 Ti	Duplex SS	Duplex SS	
S3 (DIN)	1.4539	1.4539	2.4610	1.4539	1.4539	≥ DN6
S3 (ANSI)	A904L	A904L	Hastelloy C-4	A904L	A904L	

Motor Data

A	50 Hz	3 ph. 230/400	3 ph. 500	3 ph. 380/660
		3 ph. 400/690	3 ph. 415	
B (adjustable 1:5)	50 Hz	3 ph. 230/400	3 ph. 500	3 ph. 380/660
		3 ph. 400/690	3 ph. 415	
H	60 Hz	3 ph. 220/380	3 ph. 400	
K (adjustable 1:5)	60 Hz	3 ph. 220/380	3 ph. 400	

3.7 Orlita® MF Hydraulic Diaphragm Metering Pumps

3.7.2 Orlita® MFS 18 (MF1a) Hydraulic Diaphragm Pump

Technical Data MfS 18 Single Pump 50 Hz

Plunger Ø	Stroke Volume	Pump capacity Q_{th} in l/h per pump head at a stroke rate n in rpm, identcode specification: [5 to 9]					Max. pressure	Efficiency at		Standard type of valve	Standard connection, Suction/Discharge side	
mm	cm^3/stroke	73 [5]	91 [6]	112 [7]	145 [8]	207 [9]	bar	100% pressure	50% pressure		DIN/ISO	ANSI/SME
7	0.58	2.5	3.1	3.8	5.0	7.1	400.0	0.50	0.70	DK DN 3	G1/4 internal	1/4" FNPT
8	0.75	3.2	4.1	5.0	6.5	9.3	348.0	0.55	0.72	DK DN 3	G1/4 internal	1/4" FNPT
10	1.18	5.1	6.4	7.8	10.2	14.6	222.0	0.67	0.79	Ke DN 6	G3/8 internal	1/4" FNPT
11	1.43	6.2	7.7	9.5	12.4	17.7	184.0	0.67	0.79	Ke DN 6	G3/8 internal	1/4" FNPT
12	1.70	7.3	9.2	11.3	14.7	21.0	154.0	0.84	0.88	Ke DN 6	G3/8 internal	1/4" FNPT
16	3.02	13.1	16.4	20.1	26.2	37.4	87.0	0.86	0.88	Ke DN 6	G3/8 internal	1/4" FNPT
20	4.71	20.5	25.6	31.5	41.0	58.5	55.0	0.88	0.89	Ke DN 6	G3/8 internal	1/4" FNPT
22	5.70	24.8	31.0	38.1	49.6	70.8	46.0	0.88	0.89	Ke DN 10/6	G3/8 internal	1/2"x1/4" FNPT
25	7.36	32.0	40.0	49.2	64.0	91.5	35.0	0.89	0.89	Ke DN 10	G3/8 internal	1/2" FNPT
27	8.59	37.3	46.7	57.4	74.7	106.7	30.0	0.89	0.89	Ke DN 10	G3/8 internal	1/2" FNPT
30	10.60	46.1	57.6	70.9	92.2	131.7	24.0	0.89	0.89	Ke DN 10	DN 10 PN 40	1/2" #300RF
36	15.27	66.4	83.0	102.1	132.8	189.7	17.0	0.89	0.89	Ke DN 16	DN 15 PN 40	3/4" #150RF
40	18.85	82.0	102.4	126.1	163.9	234.2	13.0	0.89	0.89	Ke DN 16	DN 15 PN 40	3/4" #150RF
44	22.81	99.2	124.0	152.6	198.4	283.4	11.0	0.89	0.90	Ke DN 16	DN 15 PN 40	3/4" #150RF
50	29.45	128.1	160.1	197.1	256.2	366.0	8.0	0.89	0.90	Ke DN 16	DN 15 PN 40	3/4" #150RF

Technical Data MfS 18 Single Pump 60 Hz

Plunger Ø	Stroke Volume	Pump capacity Q_{th} in l/h per pump head at a stroke rate n in rpm, identcode specification: [4 to 8]					Max. pressure	Efficiency at		Standard type of valve	Standard connection, Suction/Discharge side	
mm	cm^3/stroke	69 [4]	87 [5]	109 [6]	134 [7]	174 [8]	bar	100% pressure	50% pressure		DIN/ISO	ANSI/SME
7	0.58	2.4	3.0	3.7	4.5	6.0	400.0	0.50	0.70	DK DN 3	G1/4 internal	1/4" FNPT
8	0.75	3.1	3.8	4.9	6.0	7.8	348.0	0.55	0.72	DK DN 3	G1/4 internal	1/4" FNPT
10	1.18	4.9	6.1	7.6	9.3	12.2	222.0	0.67	0.79	Ke DN 6	G3/8 internal	1/4" FNPT
11	1.43	5.9	7.4	9.2	11.4	14.8	184.0	0.67	0.79	Ke DN 6	G3/8 internal	1/4" FNPT
12	1.70	7.0	8.7	11.1	13.5	17.6	154.0	0.84	0.88	Ke DN 6	G3/8 internal	1/4" FNPT
16	3.02	12.6	15.7	19.6	24.1	31.4	87.0	0.86	0.88	Ke DN 6	G3/8 internal	1/4" FNPT
20	4.71	19.6	24.6	30.7	37.8	49.2	55.0	0.88	0.89	Ke DN 6	G3/8 internal	1/4" FNPT
22	5.70	23.7	29.7	37.2	45.7	59.5	46.0	0.88	0.89	Ke DN 10/6	G3/8 internal	1/2"x1/4" FNPT
25	7.36	30.7	38.4	48.0	59.0	76.8	35.0	0.89	0.89	Ke DN 10	G3/8 internal	1/2" FNPT
27	8.59	35.7	44.7	56.0	68.8	88.8	30.0	0.89	0.89	Ke DN 10	G3/8 internal	1/2" FNPT
30	10.60	44.2	55.3	69.1	85.0	110.6	24.0	0.89	0.89	Ke DN 10	DN 10 PN 40	1/2" #300RF
36	15.27	63.7	79.6	99.6	122.5	159.3	17.0	0.89	0.89	Ke DN 16	DN 15 PN 40	3/4" #150RF
40	18.85	78.7	98.4	122.8	151.3	196.6	13.0	0.89	0.89	Ke DN 16	DN 15 PN 40	3/4" #150RF
44	22.81	95.1	119.0	148.8	183.1	238.0	11.0	0.89	0.90	Ke DN 16	DN 15 PN 40	3/4" #150RF
50	29.45	122.8	153.7	192.1	236.5	307.4	8.0	0.89	0.90	Ke DN 16	DN 15 PN 40	3/4" #150RF

DK Double ball valve
Ke Conical valve

Note:
- Other versions are available on request
- A power reserve of at least 10% should be taken into account with the API-compliant version.
- All hydraulic performance data refers to water at 20 °C.

3.7 Orlita® MF Hydraulic Diaphragm Metering Pumps

Identcode Ordering System

Motor-Driven Metering Pump Orlita® MFS18 (MF1a)

| MF1a | Drive type | | |

3.7 Orlita® MF Hydraulic Diaphragm Metering Pumps

3.7.3 Orlita® MFS 35 (MF2a) Hydraulic Diaphragm Pump

Technical Data MfS 35 Single Pump 50 Hz

Plunger Ø	Stroke Volume	Pump capacity Q_{th} in l/h per pump head at a stroke rate n in rpm, identcode specification: [5 to 9]					Max. pressure	Efficiency at		Standard type of valve	Standard connection, Suction/Discharge side	
mm	cm³/ stroke	73 [5]	91 [6]	112 [7]	145 [8]	207 [9]	bar	100% pressure	50% pressure		DIN/ISO	ANSI/SME
7	0.77	3.3	4.1	5.1	6.7	9.5	400.0	0.50	0.70	DK DN 3	G1/4 internal	1/4" FNPT
8	1.01	4.3	5.4	6.7	8.7	12.4	400.0	0.50	0.70	DK DN 3	G1/4 internal	1/4" FNPT
10	1.57	6.8	8.5	10.5	13.6	19.5	400.0	0.50	0.70	Ke DN 6	G3/8 internal	1/4" FNPT
11	1.90	8.2	10.3	12.7	16.5	23.6	368.2	0.79	0.85	Ke DN 6	G3/8 internal	1/4" FNPT
12	2.26	9.8	12.3	15.1	19.6	28.1	309.0	0.79	0.85	Ke DN 6	G3/8 internal	1/4" FNPT
16	4.02	17.4	21.8	26.9	34.9	49.9	174.0	0.83	0.86	Ke DN 6	G3/8 internal	1/4" FNPT
20	6.28	27.3	34.1	42.0	54.6	78.0	111.0	0.86	0.88	Ke DN 6	G3/8 internal	1/4" FNPT
22	7.60	33.0	41.3	50.8	66.1	94.4	92.0	0.86	0.88	Ke DN 10/6	G3/8 internal	1/2"x1/4" FNPT
25	9.82	42.7	53.3	65.7	85.4	122.0	71.0	0.87	0.88	Ke DN 10	G3/8 internal	1/2" FNPT
27	11.45	49.8	62.2	76.6	99.6	142.3	61.0	0.87	0.88	Ke DN 10	G3/8 internal	1/2" FNPT
30	14.14	61.5	76.8	94.6	122.9	175.7	49.0	0.88	0.89	Ke DN 10	DN 10 PN 100	1/2" #300RF
36	20.36	88.5	110.6	136.2	177.1	253.0	34.0	0.88	0.89	Ke DN 16	DN 15 PN 40	3/4" #300RF
40	25.13	109.3	136.6	168.2	218.6	312.3	27.0	0.89	0.89	Ke DN 16	DN 15 PN 40	3/4" #300RF
44	30.41	132.2	165.3	203.5	264.5	377.9	23.0	0.89	0.89	Ke DN 16	DN 15 PN 40	3/4" #300RF
50	39.27	170.8	213.5	262.8	341.6	488.0	17.0	0.89	0.89	Ke DN 16	DN 15 PN 40	3/4" #150RF
60	56.55	246.0	307.5	378.4	492.0	702.8	12.0	0.89	0.90	Ke DN 16/25	DN 15/25 PN 40	3/4"x1" #150RF
65	66.37	288.6	360.8	444.4	577.3	824.8	10.0	0.89	0.90	Ke DN 16/25	DN 15/25 PN 40	3/4"x1" #150RF

Technical Data MfS 35 Single Pump 60 Hz

Plunger Ø	Stroke Volume	Pump capacity Q_{th} in l/h per pump head at a stroke rate n in rpm, identcode specification [4 to 8]:					Max. pressure	Efficiency at		Standard type of valve	Standard connection, Suction/Discharge side	
mm	cm³/ stroke	69 [4]	87 [5]	109 [6]	134 [7]	174 [8]	bar	100% pressure	50% pressure		DIN/ISO	ANSI/SME
7	0.77	3.1	3.9	4.9	6.1	8.0	400.0	0.50	0.70	DK DN 3	G1/4 internal	1/4" FNPT
8	1.01	4.2	5.1	6.4	8.0	10.4	400.0	0.50	0.70	DK DN 3	G1/4 internal	1/4" FNPT
10	1.57	6.4	8.1	10.2	12.6	16.3	400.0	0.50	0.70	Ke DN 6	G3/8 internal	1/4" FNPT
11	1.90	7.9	9.8	12.3	15.2	19.8	368.2	0.79	0.85	Ke DN 6	G3/8 internal	1/4" FNPT
12	2.26	9.3	11.7	14.7	18.1	23.5	309.0	0.79	0.85	Ke DN 6	G3/8 internal	1/4" FNPT
16	4.02	16.6	20.8	26.1	32.2	41.8	174.0	0.83	0.86	Ke DN 6	G3/8 internal	1/4" FNPT
20	6.28	26.1	32.7	40.9	50.4	65.5	111.0	0.86	0.88	Ke DN 6	G3/8 internal	1/4" FNPT
22	7.60	31.6	39.6	49.5	60.9	79.3	92.0	0.86	0.88	Ke DN 10/6	G3/8 internal	1/2"x1/4" FNPT
25	9.82	40.9	51.2	63.9	78.8	102.4	71.0	0.87	0.88	Ke DN 10	G3/8 internal	1/2" FNPT
27	11.45	47.7	59.7	74.6	91.9	119.5	61.0	0.87	0.88	Ke DN 10	G3/8 internal	1/2" FNPT
30	14.14	59.0	73.8	92.1	113.5	147.4	49.0	0.88	0.89	Ke DN 10	DN 10 PN 100	1/2" #300RF
36	20.36	84.9	106.2	132.7	163.4	212.5	34.0	0.88	0.89	Ke DN 16	DN 15 PN 40	3/4" #300RF
40	25.13	104.8	131.1	163.9	201.8	262.3	27.0	0.89	0.89	Ke DN 16	DN 15 PN 40	3/4" #300RF
44	30.41	126.9	158.6	198.3	244.2	317.4	23.0	0.89	0.89	Ke DN 16	DN 15 PN 40	3/4" #300RF
50	39.27	163.9	204.9	255.6	315.3	409.9	17.0	0.89	0.89	Ke DN 16	DN 15 PN 40	3/4" #150RF
60	56.55	236.1	295.2	368.9	454.1	590.3	12.0	0.89	0.90	Ke DN 16/25	DN 15/25 PN 40	3/4"x1" #150RF
65	66.37	277.8	346.3	432.9	532.9	692.7	10.0	0.89	0.90	Ke DN 16/25	DN 15/25 PN 40	3/4"x1" #150RF

DK Double ball valve
Ke Conical valve

Note:

- Other versions are available on request
- A power reserve of at least 10% should be taken into account with the API-compliant version.
- All hydraulic performance data refers to water at 20 °C.

3.7 Orlita® MF Hydraulic Diaphragm Metering Pumps

Identcode Ordering System

Motor-Driven Metering Pump Orlita® MFS35 (MF2a)

MF2a	Drive type																			
	V1	Main drive vertical *																		
	Z1	Main drive central *																		
	AL	Drive module left-hand																		
	AR	Drive module right-hand																		
	M	Modified **																		
		Plunger diameter																		
		007	7 mm	011	11 mm	020	20 mm	030	30 mm	044	44 mm	065	65 mm							
		008	8 mm	012	12 mm	022	22 mm	036	36 mm	050	50 mm									
		010	10 mm	016	16 mm	025	25 mm	040	40 mm	060	60 mm									
			Stroke rate 50 (60) Hz																	
			4	- (69) Strokes/min		6	91 (109) Strokes/min		8	145 (174) Strokes/min										
			5	73 (87) Strokes/min		7	112 (134) Strokes/min		9	207 (-) Strokes/min										
				Liquid end material (including valve materials)																
				S1	Stainless steel (see table, sheet 2)															
					Temperature of pumped medium															
					0	-10 °C to 80 °C		2	-40 °C to 60 °C		4	10 °C to 150 °C								
					1	-25 °C to 60 °C		3	10 °C to 115 °C											
						Displacer format														
						0	PTFE multi-layer diaphragm													
						1	PTFE multi-layer diaphragm with pressure gauge													
							Liquid end version													
							0	Standard					2	Standard + double valve						
							1	Standard with spring					3	Standard + double valve with spring						
								Hydraulic connection suction side												
								G	Thread DIN/ISO				A	Flange ANSI						
								N	Thread NPT/ANSI				D	Flange DIN/ISO						
									Hydraulic connection discharge side											
									G	Thread DIN/ISO			A	Flange ANSI						
									N	Thread NPT/ANSI			D	Flange DIN/ISO						
										Version										
										0	no features				2	Liquid end polished				
										1	Liquid end heating				3	Special paint finish				
											Power connector									
											A	Standard voltages 50Hz								
											B	Standard voltages 50Hz adjustable								
											H	Standard voltages 60Hz								
											K	Standard voltages 60Hz adjustable								
											0	Externally mounted pump								
											1	without motor with IEC flange								
											2	without motor with NEMA flange								
												Electrical protection system / explosion protection								
												0	IP 55		D	IP 56 EExn				
												1	IP 56		E	IP 56 EExe				
												A	IP 55 EExn		F	IP 56 EExde				
												B	IP 55 EExe		K	IP 65 EExde				
												C	IP 55 EExde							
													Electrical options							
													0	no options						
													1	Stroke sensor						
														Stroke length adjustment						
														0	manual					
														1	0/4-20 mA without Ex					
														2	0/4-20 mA Ex Zone 2					
														3	0/4-20 mA Ex Zone 1					
														4	0/4-20 mA without EX offshore					
														5	0/4-20 mA Ex Zone 2 offshore					
														6	0/4-20 mA Ex Zone 1 offshore					
															Environmental conditions					
															0	-20 °C to 40 °C				
															1	-40 °C to 40 °C				
															2	0 °C to 55 °C				
																Approvals				
																0	CE			
																1	API 675			
																2	VDMA			
																3	ATEX			
																4	ATEX / API 675			
																5	VDMA / ATEX			

*For further pump configurations see Type Of Drive page → 3-43

** Modified design (M) is available with every Identcode feature

3.7 Orlita® MF Hydraulic Diaphragm Metering Pumps

3.7.4 Orlita® MFS 80 (MF3a) Hydraulic Diaphragm Pump

Technical Data MfS 80 Single Pump 50 Hz

Plunger Ø	Stroke Volume	Pump capacity Q_{th} in l/h per pump head at a stroke rate n in rpm [identcode specification]						Max. pressure	Efficiency at		Standard type of valve	Standard connection, Suction/Discharge side	
mm	cm³/ stroke	86 [2]	98 [3]	122 [5]	134 [6]	160 [8]	182 [9]	bar	100% pressure	50% pressure		DIN/ISO	ANSI/SME
16	4.02	20.8	23.6	29.4	32.4	38.6	43.9	400.0	0.75	0.83	Ke DN 6	G 3/8	1/4" FNPT
20	6.28	32.5	37.0	46.0	50.6	60.3	68.5	400.0	0.75	0.83	Ke DN 6	G 3/8	1/4" FNPT
22	7.60	39.3	44.7	55.6	61.3	73.0	82.9	360.0	0.79	0.80	Ke DN 10/6	G 3/8	1/2" x 1/4" FNPT
25	9.82	50.8	57.8	71.9	79.1	94.2	107.1	285.0	0.79	0.85	Ke DN 10	G 3/8	1/2" FNPT
27	11.45	59.3	67.4	83.8	92.3	109.9	125.0	244.0	0.81	0.85	Ke DN 10	G 3/8	1/2" FNPT
30	14.14	73.2	83.2	103.5	113.9	135.7	154.3	198.0	0.83	0.86	Ke DN 10	DN 10 PN 250	1/2" 1500RF
36	20.36	105.4	119.9	149.0	164.1	195.4	222.2	137.0	0.85	0.87	Ke DN 16	DN 15 PN 160	3/4" 1500RF
40	25.13	130.2	148.0	184.0	202.6	241.3	274.3	111.0	0.86	0.88	Ke DN 16	DN 15 PN 160	3/4" 1500RF
44	30.41	157.5	179.1	222.7	245.2	292.0	331.9	98.0	0.86	0.88	Ke DN 16	DN 15 PN 100	3/4" 600RF
50	39.27	203.4	231.3	287.5	316.6	377.1	428.6	71.0	0.87	0.88	Ke DN 16	DN 15 PN 100	3/4" 600RF
60	56.55	293.0	333.1	414.1	455.9	543.0	617.3	50.0	0.88	0.89	Ke DN 16/25	DN 25 PN 40	1" 300RF
65	66.37	343.8	390.9	486.0	535.1	637.2	724.4	40.0	0.88	0.89	Ke DN 16/25	DN 25 PN 40	1" 300RF
80	100.53	520.9	592.1	736.2	810.5	965.3	1,097.3	25.0	0.89	0.89	Ke DN 25	DN 25 PN 40	1" 300RF
100	157.08	813.9	925.2	1,150.3	1,266.5	1,508.3	1,714.6	17.0	0.89	0.89	Ke DN 32	DN 32 PN 40	1 1/2" 150RF
120	226.19	1,172.0	1,332.3	1,656.4	1,823.8	2,172.0	2,469.1	12.0	0.89	0.89	Ke DN 32	DN 32 PN 40	1 1/2" 150RF
140	307.88	1,595.3	1,813.4	2,254.6	2,482.4	2,956.4	3,360.7	9.0	0.89	0.90	Ke DN 40	DN 40 PN 16	1 1/2" 150RF
150	353.43	1,831.3	2,081.8	2,588.2	2,849.7	3,393.8	3,858.0	7.0	0.89	0.90	Ke DN 40	DN 40 PN 16	1 1/2" 150RF

Technical Data MfS 80 Single Pump 60 Hz

Plunger Ø	Stroke Volume	Pump capacity Q_{th} in l/h per pump head at a stroke rate n in rpm [identcode specification]:					Max. pressure	Efficiency at		Standard type of valve	Standard connection, Suction/Discharge side	
mm	cm³/ stroke	93 [1]	103 [2]	117 [3]	146 [5]	160 [6]	bar	100% pressure	50% pressure		DIN/ISO	ANSI/SME
16	4.02	22.5	24.9	28.3	35.2	38.8	400.0	0.75	0.83	Ke DN 6	G 3/8	1/4" FNPT
20	6.28	35.1	39.0	44.4	55.2	60.7	400.0	0.75	0.83	Ke DN 6	G 3/8	1/4" FNPT
22	7.60	42.6	47.1	53.6	66.7	73.5	360.0	0.79	0.80	Ke DN 10/6	G 3/8	1/2" x 1/4" FNPT
25	9.82	55.0	60.9	69.3	86.2	94.9	285.0	0.79	0.85	Ke DN 10	G 3/8	1/2" FNPT
27	11.45	64.2	71.1	80.8	99.6	110.7	244.0	0.81	0.85	Ke DN 10	G 3/8	1/2" FNPT
30	14.14	79.3	87.8	99.8	123.6	136.6	198.0	0.83	0.86	Ke DN 10	DN 10 PN 250	1/2" 1500RF
36	20.36	114.2	126.4	143.8	178.8	196.9	137.0	0.85	0.87	Ke DN 16	DN 15 PN 160	3/4" 1500RF
40	25.13	141.0	156.2	177.6	220.8	243.1	111.0	0.86	0.88	Ke DN 16	DN 15 PN 160	3/4" 1500RF
44	30.41	170.9	189.0	214.9	267.2	294.2	98.0	0.86	0.88	Ke DN 16	DN 15 PN 100	3/4" 600RF
50	39.27	220.3	244.0	277.5	345.0	379.9	71.0	0.87	0.88	Ke DN 16	DN 15 PN 100	3/4" 600RF
60	56.55	317.4	351.6	399.7	496.9	547.1	50.0	0.88	0.89	Ke DN 16/25	DN 25 PN 40	1" 300RF
65	66.37	372.4	412.5	469.0	583.2	642.1	40.0	0.88	0.89	Ke DN 16/25	DN 25 PN 40	1" 300RF
80	100.53	564.2	625.0	710.5	883.4	972.6	25.0	0.89	0.89	Ke DN 25	DN 25 PN 40	1" 300RF
100	157.08	881.6	976.6	1,110.2	1,330.3	1,519.2	17.0	0.89	0.89	Ke DN 32	DN 32 PN 40	1 1/2" 150RF
120	226.19	1,269.6	1,406.4	1,598.7	1,987.5	2,188.5	12.0	0.89	0.89	Ke DN 32	DN 32 PN 40	1 1/2" 150RF
140	307.88	1,368.0	1,914.3	2,176.0	2,705.5	2,978.8	9.0	0.89	0.90	Ke DN 40	DN 40 PN 16	1 1/2" 150RF
150	353.43	1,983.7	2,197.5	2,498.1	3,105.8	3,419.6	7.0	0.89	0.90	Ke DN 40	DN 40 PN 16	1 1/2" 150RF

3.7 Orlita® MF Hydraulic Diaphragm Metering Pumps

Identcode Ordering System

Motor-Driven Metering Pump Orlita® MFS80 (MF3a)

| MF3a | Drive type | | |

3.7 Orlita® MF Hydraulic Diaphragm Metering Pumps

3.7.5 Orlita® MFS 180 (MF4a) Hydraulic Diaphragm Pump

Technical Data MfS 180 Single Pump 50 Hz

Plunger Ø	Stroke Volume	Pump capacity Q_{th} in l/h per pump head at a stroke rate n in rpm [identcode specification]:						Max. pressure	Efficiency at		Standard type of valve	Standard connection, Suction/Discharge side	
mm	cm³/ stroke	72 [2]	81 [3]	107 [5]	134 [7]	152 [8]	171 [9]	bar	100% pressure	50% pressure		DIN/ISO	ANSI/SME
25	19.63	84.3	95.5	126.3	157.5	178.6	201.4	366.0	0.77	0.83	Ke DN 16	DN 15 PN 400	3/4" 2500RTJ
30	28.27	121.4	137.6	181.9	226.9	257.3	290.0	254.0	0.81	0.85	Ke DN 16	DN 15 PN 320	3/4" 1500RF
36	40.72	174.9	198.2	262.0	326.7	370.5	417.7	176.0	0.83	0.86	Ke DN 16	DN 15 PN 250	1" 1500RF
38	45.36	194.9	220.8	291.9	364.0	412.8	465.4	158.0	0.84	0.87	Ke DN 16	DN 15 PN 160	1" 1500RF
40	50.27	215.9	244.7	323.4	403.4	457.4	515.7	143.0	0.85	0.87	Ke DN 25	DN 15 PN 160	1" 1500RF
44	60.82	261.3	296.1	391.3	488.1	553.5	623.9	118.0	0.85	0.87	Ke DN 25	DN 25 PN 160	1" 1500RF
50	78.54	337.4	382.3	505.4	630.3	714.7	805.7	91.0	0.86	0.88	Ke DN 25	DN 25 PN 100	1" 600RF
55	95.03	408.2	462.6	611.5	762.7	864.8	974.9	75.0	0.87	0.88	Ke DN 32	DN 25 PN 100	1" 600RF
60	113.10	485.9	550.6	727.7	907.7	1,029.2	1,160.3	63.0	0.87	0.89	Ke DN 32	DN 25 PN 64	1" 600RF
65	132.73	570.2	646.2	854.1	1,065.2	1,207.9	1,361.7	54.0	0.88	0.89	Ke DN 32	DN 40 PN 64	1 1/2" 600RF
70	153.94	661.3	749.4	990.5	1,235.4	1,400.9	1,579.3	46.0	0.88	0.89	Ke DN 40	DN 40 PN 64	1 1/2" 600RF
75	176.71	759.2	860.3	1,137.1	1,418.2	1,608.1	1,812.9	40.0	0.88	0.89	Ke DN 40	DN 40 PN 64	1 1/2" 300RF
80	201.06	863.8	978.8	1,293.8	1,613.6	1,829.7	2,062.7	35.0	0.88	0.89	Ke DN 40	DN 40 PN 40	1 1/2" 300RF
85	226.98	975.1	1,105.0	1,460.6	1,821.7	2,065.6	2,328.6	31.0	0.88	0.89	Ke DN 40	DN 40 PN 40	1 1/2" 300RF
90	254.47	1,093.2	1,238.0	1,637.4	2,042.3	2,315.7	2,610.7	28.0	0.89	0.89	Ke DN 40	DN 40 PN 40	1 1/2" 300RF
100	314.16	1,349.7	1,529.4	2,021.5	2,521.3	2,858.9	3,223.1	22.0	0.89	0.89	Pt DN 50	DN 50 PN 40	2" 150RF
115	415.48	1,785.0	2,022.7	2,673.5	3,334.5	3,781.0	4,262.5	17.0	0.89	0.89	Pt DN 65	DN 65 PN 40	2 1/2" 150RF
135	572.56	2,459.8	2,787.4	3,684.3	4,595.2	5,210.4	5,874.0	12.0	0.89	0.90	Pt DN 65	DN 65 PN 16	2 1/2" 150RF
142	633.47	3,092.7	3,532.8	4,469.7	5,717.0	6,415.8	7,120.4	11.0	0.89	0.90	Pt DN 65	DN 65 PN 16	2 1/2" 150RF

Technical Data MfS 180 Single Pump 60 Hz

Plunger Ø	Stroke Volume	Pump capacity Q_{th} in l/h per pump head at a stroke rate n in rpm [identcode specification]					Max. pressure	Efficiency at		Standard type of valve	Standard connection, Suction/Discharge side	
mm	cm³/ stroke	75 [1]	86 [2]	97 [3]	128 [5]	160 [7]	bar	100% pressure	50% pressure		DIN/ISO	ANSI/SME
25	19.63	88.8	101.1	114.6	151.5	189.0	352.0	0.77	0.83	Ke DN 16	DN 15 PN 400	3/4" 2500RTJ
30	28.27	127.8	145.6	165.1	218.2	272.2	254.0	0.81	0.85	Ke DN 16	DN 15 PN 320	3/4" 1500RF
36	40.72	184.1	209.8	237.8	314.4	392.0	176.0	0.83	0.86	Ke DN 16	DN 15 PN 250	1" 1500RF
38	45.36	205.2	233.8	264.9	350.2	436.8	158.0	0.84	0.87	Ke DN 16	DN 15 PN 160	1" 1500RF
40	50.27	227.3	259.0	293.6	388.0	484.0	143.0	0.85	0.87	Ke DN 25	DN 15 PN 160	1" 1500RF
44	60.82	275.0	313.5	355.3	469.5	585.7	118.0	0.85	0.87	Ke DN 25	DN 25 PN 160	1" 1500RF
50	78.54	355.2	404.8	458.7	606.4	756.3	91.0	0.86	0.88	Ke DN 25	DN 25 PN 100	1" 600RF
55	95.03	429.8	489.8	555.1	733.8	915.2	75.0	0.87	0.88	Ke DN 32	DN 25 PN 100	1" 600RF
60	113.10	511.5	583.0	660.7	873.2	1,089.2	63.0	0.87	0.89	Ke DN 32	DN 25 PN 64	1" 600RF
65	132.73	600.3	684.2	775.4	1,024.9	1,278.2	54.0	0.88	0.89	Ke DN 32	DN 40 PN 64	1 1/2" 600RF
70	153.94	696.2	793.5	899.2	1,188.6	1,482.4	46.0	0.88	0.89	Ke DN 40	DN 40 PN 64	1 1/2" 600RF
75	176.71	799.3	911.0	1,032.3	1,364.5	1,701.8	40.0	0.88	0.89	Ke DN 40	DN 40 PN 64	1 1/2" 300RF
80	201.06	909.4	1,036.5	1,174.5	1,552.5	1,936.3	35.0	0.88	0.89	Ke DN 40	DN 40 PN 40	1 1/2" 300RF
85	226.98	1,026.7	1,170.1	1,326.0	1,752.7	2,186.0	31.0	0.88	0.89	Ke DN 40	DN 40 PN 40	1 1/2" 300RF
90	254.47	1,151.0	1,311.8	1,485.6	1,964.8	2,450.7	28.0	0.89	0.89	Ke DN 40	DN 40 PN 40	1 1/2" 300RF
100	314.16	1,421.0	1,619.6	1,835.2	2,425.8	3,055.5	22.0	0.89	0.89	Pt DN 50	DN 50 PN 40	2" 150RF
115	415.48	1,879.3	2,142.0	2,427.2	3,208.2	4,001.4	17.0	0.89	0.89	Pt DN 65	DN 65 PN 40	2 1/2" 150RF
135	572.56	2,589.8	2,951.7	3,344.8	4,421.6	5,514.2	11.0	0.89	0.90	Pt DN 65	DN 65 PN 16	2 1/2" 150RF
142	633.47	2,865.4	3,265.8	3,700.9	4,891.5	–	11.0	0.89	0.90	Pt DN 65	DN 65 PN 16	2 1/2" 150RF

Ke Conical valve
Pt Plate valve

Note:
- Other versions are available on request
- A power reserve of at least 10% should be taken into account with the API-compliant version
- All hydraulic performance data refers to water at 20 °C

3.7 Orlita® MF Hydraulic Diaphragm Metering Pumps

Identcode Ordering System

Motor-Driven Metering Pump Orlita® MFS180 (MF4a)

| MF4a | Drive type | | |

3.7 Orlita® MF Hydraulic Diaphragm Metering Pumps

3.7.6 Orlita® MFS 600 (MF5a) Hydraulic Diaphragm Pump

Technical Data MfS 600 Single Pump 50 Hz

Plunger Ø	Stroke Volume	Pump capacity Q_{th} in l/h per pump head at a stroke rate n in rpm [identcode specification]:						Max. pressure	Efficiency at		Standard type of valve	Standard connection, Suction/Discharge side	
mm	cm³/ stroke	72 [2]	90 [4]	117 [6]	134 [7]	156 [8]	173 [9]	bar	100% pressure	50% pressure		DIN/ISO	ANSI/SME
26	20.43	88.2	109.9	143.4	164.1	191.3	211.8	783.0	0.62	0.76	DK DN 15	on request	to be agreed
30	28.27	122.1	152.1	198.5	227.1	264.7	293.1	565.0	0.69	0.79	Ke DN 16	on request	to be agreed
36	40.72	175.8	219.0	285.8	327.0	381.2	422.1	392.0	0.76	0.83	Ke DN 16	DN 15 PN 400	1" 2500RTJ
40	50.27	217.1	270.4	352.9	403.7	470.7	521.2	318.0	0.78	0.84	Ke DN 16	DN 15 PN 320	1" 2500RTJ
44	60.82	262.7	327.2	427.0	488.5	569.5	630.6	263.0	0.80	0.85	Ke DN 25	DN 25 PN 320	1" 2500RTJ
46	66.48	287.1	357.6	466.7	534.0	622.5	689.3	240.0	0.81	0.85	Ke DN 25	DN 25 PN 250	1" 1500RF
50	78.54	339.2	422.5	551.4	630.9	735.5	814.4	221.0	0.83	0.86	Ke DN 25	DN 25 PN 250	1" 1500RF
55	95.03	410.5	511.3	667.3	763.4	889.9	985.4	168.0	0.84	0.87	Ke DN 25	DN 25 PN 250	1" 1500RF
60	113.10	488.5	608.5	794.1	908.5	1,059.1	1,172.7	141.0	0.85	0.87	Ke DN 25	DN 25 PN 160	1" 1500RF
65	132.73	573.3	714.1	932.0	1,066.2	1,243.0	1,376.0	120.0	0.85	0.87	Ke DN 32	DN 40 PN 160	1 1/2" 1500RF
70	153.94	664.9	828.2	1,080.9	1,236.6	1,441.6	1,596.2	100.0	0.90	0.88	Ke DN 32	DN 40 PN 100	1 1/2" 600RF
75	176.71	763.3	950.7	1,240.8	1,419.5	1,654.9	1,832.4	90.0	0.86	0.88	Ke DN 32	DN 40 PN 100	1 1/2" 600RF
80	201.06	868.5	1,081.7	1,411.8	1,615.1	1,882.9	2,084.9	79.0	0.87	0.88	Ke DN 40	DN 40 PN 100	1 1/2" 600RF
85	226.98	980.5	1,221.2	1,593.8	1,823.3	2,125.6	2,353.6	70.0	0.87	0.88	Ke DN 40	DN 40 PN 100	1 1/2" 600RF
90	254.47	1,099.2	1,369.1	1,786.8	2,044.2	2,383.0	2,638.7	62.0	0.87	0.88	Ke DN 40	DN 40 PN 100	1 1/2" 600RF
100	314.16	1,357.0	1,690.2	2,205.9	2,523.7	2,942.0	3,257.6	50.0	0.88	0.89	Ke DN 50	DN 50 PN 64	2" 600RF
115	415.48	1,794.7	2,235.4	2,917.3	3,337.6	3,890.8	4,308.2	38.0	0.88	0.89	Ke DN 65	DN 65 PN 40	2 1/2" 300RF
125	490.87	2,120.4	2,641.0	3,446.8	3,943.3	4,596.9	5,090.1	32.0	0.89	0.89	Ke DN 65	DN 65 PN 40	2 1/2" 300RF
140	615.75	2,659.9	3,312.9	4,323.6	4,946.4	5,766.4	6,385.0	25.0	0.89	0.89	Ke DN 65	DN 65 PN 40	2 1/2" 300RF
160	804.25	3,474.1	4,327.1	5,647.2	6,460.7	7,531.7	8,339.6	19.0	0.89	0.89	Ke DN 65	DN 65 PN 40	2 1/2" 300RF

Technical Data MfS 600 Single Pump 60 Hz

Plunger Ø	Stroke Volume	Pump capacity Q_{th} in l/h per pump head at a stroke rate n in rpm [identcode specification]:					Max. pressure	Efficiency at		Standard type of valve	Standard connection, Suction/Discharge side	
mm	cm³/ stroke	78 [1]	86 [2]	108 [4]	140 [6]	160 [7]	bar	100% pressure	50% pressure		DIN/ISO	ANSI/SME
26	20.43	95.2	105.8	131.8	172.0	196.9	783.0	0.62	0.76	DK DN 15	on request	to be agreed
30	28.27	131.8	146.5	182.5	238.2	272.5	565.0	0.69	0.79	Ke DN 16	on request	to be agreed
36	40.72	189.9	210.9	262.8	342.9	392.4	392.0	0.76	0.83	Ke DN 16	DN 15 PN 400	1" 2500RTJ
40	50.27	234.4	260.5	324.4	423.4	484.4	318.0	0.78	0.84	Ke DN 16	DN 15 PN 320	1" 2500RTJ
44	60.82	283.8	315.2	392.6	512.4	586.2	263.0	0.80	0.85	Ke DN 25	DN 25 PN 320	1" 2500RTJ
46	66.48	310.2	344.5	429.3	560.0	640.8	240.0	0.81	0.85	Ke DN 25	DN 25 PN 250	1" 1500RF
50	78.54	366.4	407.0	507.0	661.6	757.0	200.0	0.83	0.86	Ke DN 25	DN 25 PN 250	1" 1500RF
55	95.03	443.5	492.6	613.5	800.7	916.0	168.0	0.84	0.87	Ke DN 25	DN 25 PN 250	1" 1500RF
60	113.10	527.7	586.2	730.2	952.9	1,090.2	141.0	0.85	0.87	Ke DN 25	DN 25 PN 160	1" 1500RF
65	132.73	619.4	687.9	856.9	1,118.4	1,279.4	120.0	0.85	0.87	Ke DN 40	DN 40 PN 160	1 1/2" 1500RF
70	153.94	718.3	797.8	993.8	1,297.0	1,483.9	100.0	0.90	0.88	Ke DN 32	DN 40 PN 100	1 1/2" 600RF
75	176.71	824.6	915.9	1,140.8	1,488.9	1,703.4	90.0	0.86	0.88	Ke DN 32	DN 40 PN 100	1 1/2" 600RF
80	201.06	937.9	1,042.2	1,298.0	1,694.1	1,938.1	79.0	0.87	0.88	Ke DN 40	DN 40 PN 100	1 1/2" 600RF
85	226.98	1,059.2	1,176.6	1,465.4	1,912.5	2,187.9	70.0	0.87	0.88	Ke DN 40	DN 40 PN 100	1 1/2" 600RF
90	254.47	1,187.5	1,319.0	1,624.9	2,144.1	2,453.0	62.0	0.87	0.88	Ke DN 40	DN 40 PN 100	1 1/2" 600RF
100	314.16	1,466.1	1,628.4	2,028.0	2,646.0	3,028.0	50.0	0.88	0.89	Ke DN 50	DN 50 PN 64	2" 600RF
115	415.48	1,938.9	2,153.6	2,682.4	3,500.7	4,005.1	38.0	0.88	0.89	Ke DN 65	DN 65 PN 40	2 1/2" 300RF
125	490.87	2,290.8	2,544.0	3,169.2	4,136.1	4,731.9	32.0	0.89	0.89	Ke DN 65	DN 65 PN 40	2 1/2" 300RF
140	615.75	2,873.6	3,191.8	3,975.4	5,188.3	5,935.6	25.0	0.89	0.89	Ke DN 65	DN 65 PN 40	2 1/2" 300RF
160	804.25	3,753.3	4,168.8	5,192.5	5,646.0	7,752.0	19.0	0.89	0.89	Ke DN 65	DN 65 PN 40	2 1/2" 300RF

DK Double ball valve
Ke Conical valve

Note:
- Other versions are available on request
- A power reserve of at least 10% should be taken into account with the API-compliant version.
- All hydraulic performance data refers to water at 20 °C.

3.7 Orlita® MF Hydraulic Diaphragm Metering Pumps

Identcode Ordering System

Motor-Driven Metering Pump Orlita® MFS600 (MF5a)

| MF5a | Drive type | | |

3.7 Orlita® MF Hydraulic Diaphragm Metering Pumps

3.7.7 Orlita® MFS 1400 (MF6a) Hydraulic Diaphragm Pump

Technical Data MfS 1400 Single Pump 50 Hz

Plunger Ø	Stroke Volume	Pump capacity Q_{th} in l/h per pump head at a stroke rate n in rpm [identcode specification]:						Max. pressure	Efficiency at		Standard type of valve	Standard connection, Suction/Discharge side	
mm	cm³/ stroke	80 [4]	93 [5]	106 [6]	125 [7]	143 [8]	169 [9]	bar	100% pressure	50% pressure		DIN/ISO	ANSI/SME
30	42.41	202.6	235.7	270.1	318.3	364.2	431.0	630.0	0.67	0.78	Ke DN 16	on request	to be agreed
40	75.40	360.2	419.1	480.2	565.9	647.5	766.3	435.0	0.75	0.83	Ke DN 25	DN 25 PN 400	1" 2500RTJ
42	83.13	397.1	462.1	529.4	623.9	713.9	844.8	435.0	0.76	0.83	Ke DN 25	DN 25 PN 400	1" 2500RTJ
44	91.23	435.8	507.1	581.0	684.8	783.5	927.2	394.0	0.76	0.83	Ke DN 25	DN 25 PN 400	1" 2500RTJ
46	99.71	476.3	554.3	635.0	748.5	856.3	1,013.4	361.0	0.77	0.83	Ke DN 25	DN 25 PN 400	1" 2500RTJ
50	117.81	562.8	654.9	750.3	884.3	1,011.7	1,197.3	305.0	0.79	0.84	Ke DN 25	DN 25 PN 320	1" 2500RTJ
55	142.55	681.0	792.0	907.8	1,070.0	1,224.2	1,448.8	250.0	0.81	0.85	Ke DN 25	DN 25 PN 250	1" 1500RTJ
60	169.65	810.5	943.0	1,080.4	1,273.4	1,456.9	1,724.2	212.0	0.82	0.86	Ke DN 25	DN 25 PN 250	1" 1500RTJ
65	199.10	951.2	1,106.8	1,268.0	1,494.5	1,709.9	2,023.5	180.0	0.83	0.87	Ke DN 32	DN 40 PN 250	1 1/2" 1500RF
70	230.91	1,103.1	1,283.6	1,470.6	1,733.3	1,983.1	2,346.8	155.0	0.84	0.87	Ke DN 40	DN 40 PN 160	1 1/2" 1500RF
75	265.07	1,266.4	1,473.5	1,688.2	1,989.7	2,276.5	2,694.0	135.0	0.85	0.87	Ke DN 40	DN 40 PN 160	1 1/2" 1500RF
80	301.59	1,440.8	1,676.5	1,920.8	2,263.9	2,590.1	3,065.2	119.0	0.85	0.87	Ke DN 40	DN 40 PN 160	1 1/2" 1500RF
90	381.70	1,823.6	2,121.9	2,431.0	2,865.2	3,278.2	3,879.4	94.0	0.90	0.90	Ke DN 50	DN 50 PN 100	2" 600RF
100	471.24	2,251.3	2,619.6	3,001.3	3,537.3	4,047.1	4,789.4	76.0	0.87	0.88	Ke DN 65	DN 65 PN 100	2 1/2" 600RF
115	623.21	2,977.4	3,464.5	3,969.2	4,678.1	5,352.4	6,334.0	57.0	0.88	0.89	Ke DN 65	DN 65 PN 64	2 1/2" 600RF
140	923.63	4,412.7	5,134.5	5,882.5	6,933.1	7,932.4	9,387.3	38.0	0.88	0.89	Ke DN 80	DN 80 PN 40	2 1/2" 300RF
160	1,206.37	5,763.5	6,706.3	7,683.3	9,055.5	10,360.7	12,261.2	29.0	0.89	0.89	Ke DN 80	DN 80 PN 40	3" 300RF

Technical Data MfS 1400 Single Pump 60 Hz

Plunger Ø	Stroke Volume	Pump capacity Q_{th} in l/h per pump head at a stroke rate n in rpm, identcode specification [3 to 7]:					Max. pressure	Efficiency at		Standard type of valve	Standard connection, Suction/Discharge side	
mm	cm³/ stroke	86 [3]	96 [4]	111 [5]	127 [6]	150 [7]	bar	100% pressure	50% pressure		DIN/ISO	ANSI/SME
30	42.41	220.5	243.1	282.8	324.1	381.9	630.0	0.67	0.78	Ke DN 16	on request	to be agreed
40	75.40	392.1	432.2	502.9	576.2	679.0	435.0	0.75	0.83	Ke DN 25	DN 25 PN 400	1" 2500RTJ
42	83.13	432.3	476.5	554.5	635.2	748.6	435.0	0.76	0.83	Ke DN 25	DN 25 PN 400	1" 2500RTJ
44	91.23	474.4	522.9	608.5	697.2	821.7	394.0	0.76	0.83	Ke DN 25	DN 25 PN 400	1" 2500RTJ
46	99.71	518.6	571.5	665.1	762.0	898.2	361.0	0.77	0.83	Ke DN 25	DN 25 PN 400	1" 2500RTJ
50	117.81	612.7	675.3	785.8	900.3	1,061.1	305.0	0.79	0.84	Ke DN 25	DN 25 PN 320	1" 2500RTJ
55	142.55	741.4	817.2	950.4	1,089.3	1,284.0	250.0	0.81	0.85	Ke DN 25	DN 25 PN 250	1" 1500RTJ
60	169.65	882.3	972.6	1,131.6	1,298.4	1,528.0	212.0	0.82	0.86	Ke DN 25	DN 25 PN 250	1" 1500RTJ
65	199.10	1,035.6	1,141.4	1,328.1	1,521.6	1,793.4	180.0	0.83	0.87	Ke DN 32	DN 40 PN 250	1 1/2" 1500RF
70	230.91	1,201.0	1,323.7	1,540.7	1,764.7	2,079.9	155.0	0.84	0.87	Ke DN 40	DN 40 PN 160	1 1/2" 1500RF
75	265.07	1,378.8	1,519.6	1,768.2	2,025.8	2,387.6	135.0	0.85	0.87	Ke DN 40	DN 40 PN 160	1 1/2" 1500RF
80	301.59	1,568.7	1,728.9	2,011.8	2,304.9	2,776.6	119.0	0.85	0.87	Ke DN 40	DN 40 PN 160	1 1/2" 1500RF
90	381.70	1,985.5	2,188.3	2,546.2	2,917.2	3,438.2	94.0	0.90	0.90	Ke DN 50	DN 50 PN 100	2" 600RF
100	471.24	2,451.2	2,701.5	3,143.5	3,601.5	4,244.7	76.0	0.87	0.88	Ke DN 65	DN 65 PN 100	2 1/2" 600RF
115	623.21	3,241.8	3,572.8	4,157.4	4,763.0	5,613.7	57.0	0.88	0.89	Ke DN 65	DN 65 PN 64	2 1/2" 600RF
140	923.21	1,864.4	2,925.2	6,161.4	7,059.0	8,319.7	38.0	0.88	0.89	Ke DN 80	DN 80 PN 40	2 1/2" 300RF
160	1,206.37	6,275.2	6,916.2	8,047.5	9,219.9	10,866.6	29.0	0.89	0.89	Ke DN 80	DN 80 PN 40	3" 300RF

Ke Conical valve

Note:
- Other versions are available on request
- A power reserve of at least 10% should be taken into account with the API-compliant version
- All hydraulic performance data refers to water at 20 °C

3.7 Orlita® MF Hydraulic Diaphragm Metering Pumps

Identcode Ordering System

Motor-Driven Metering Pump Orlita® MFS1400 (MF6a)

| MF6a | Drive type | | |

3.8 Orlita® MH Hydraulic Diaphragm Metering Pumps

3.8.1 Orlita® MH Hydraulic Diaphragm Pump With Metal Diaphragm

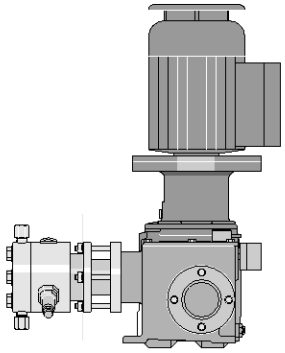

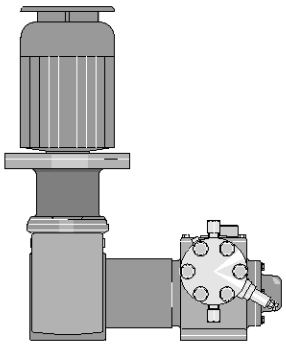

pk_2_122
MhS 35-5

Hydraulically operated diaphragm head. A metal diaphragm forms a hermetic seal between the liquid and hydraulic ends.

During both discharge and suction strokes the diaphragm is balanced by the hydraulic liquid which is displaced by the plunger.

A pressure relief valve and an automatic vent valve for the hydraulic chamber are integrated in the pump head. The valve-free forced reflow of the internal oil leakage operates wear free and guarantees optimum metering accuracy.

The suction and discharge valves are either cone, ball or prismatic depending on the design width and operating pressure.

All parts in contact with the feed chemical are made of stainless steel.

High pressure diaphragm pumps on request

Pump type	Plunger Ø	Stroke Volume	Capacity max. (theo.) in l/h at strokes/min (50 Hz)					Max. pressure
	mm	cm³/stroke	73	91	112	145	207	bar
MHS 18/	5	0.29	1.2	1.6	1.9	2.5	3.6	500
	6	0.42	1.8	2.3	2.8	3.6	5.2	500
	7	0.58	2.5	3.1	3.8	5.0	7.1	400
	8	0.75	3.2	4.1	5.0	6.5	9.3	320
	10	1.18	5.1	6.4	7.8	10.2	14.6	222
	12	1.70	7.3	9.2	11.3	14.7	21.0	154
	16	3.02	13.1	16.4	20.1	26.2	37.4	87
	20	4.71	20.5	25.6	31.5	41.0	58.5	55

Pump type	Plunger Ø	Stroke Volume	Capacity max. (theo.) in l/h at strokes/min (50 Hz)					Max. pressure
	mm	cm³/stroke	73	91	112	145	207	bar
MHS 35/	7	0.77	3.3	4.1	5.1	6.7	9.5	900
	8	1.01	4.3	5.4	6.7	8.7	12.4	630
	10	1.57	6.8	8.5	10.5	13.6	19.5	445
	12	2.26	9.8	12.3	15.1	19.6	28.1	309
	20	6.28	27.3	34.1	42.0	54.6	78.0	111
	22	7.60	33.0	41.3	50.8	66.1	94.4	71
	25	9.80	42.7	53.3	65.7	85.4	122.0	71
	36	20.36	88.5	110.6	136.2	177.1	253.0	27
	40	25.13	109.3	136.6	168.2	218.6	312.3	27
	45	31.81	138.3	172.9	212.8	276.7	395.3	22

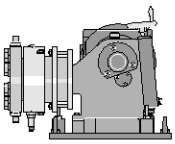

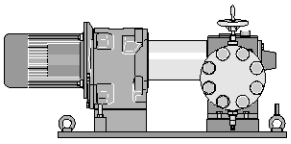

pk_2_120
MhS 80/22

Pump type	Plunger Ø	Stroke Volume	Capacity max. (theo.) in l/h at strokes/min (50 Hz)						Max. pressure
	mm	cm³/stroke	78	98	122	134	155	182	bar
MHS 80/	16	4.02	18.8	23.6	29.4	32.4	37.4	43.9	696
	18	5.09	23.8	29.9	37.2	41.0	47.3	55.5	550
	22	7.60	35.5	44.7	55.6	61.3	70.7	82.9	368
	25	9.82	45.9	57.8	71.9	79.1	91.3	107.1	285

3.8 Orlita® MH Hydraulic Diaphragm Metering Pumps

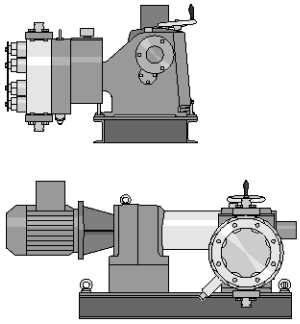

pk_2_088_1
MhS 600/26

Pump type	Plunger Ø	Stroke Volume	Capacity max. (theo.) in l/h at strokes/min (50 Hz)						Max. pressure
	mm	cm³/stroke	72	90	117	134	156	173	bar
MHS 600/	26	20.43	88.2	109.9	143.4	164.1	191.3	211.8	783
	28	24.63	106.4	132.5	172.9	197.8	230.6	255.4	649
	30	28.37	122.1	152.1	198.5	227.1	264.7	293.1	565
	32	32.17	138.9	173.0	225.8	258.4	301.2	333.5	497

Pump type	Plunger Ø	Stroke Volume	Capacity max. (theo.) in l/h at strokes/min (50 Hz)						Max. pressure
	mm	cm³/stroke	80	93	106	125	143	169	bar
MHS 1400/	30	42.41	202.6	235.7	270.1	318.3	364.2	431.0	800
	32	48.25	230.5	268.2	307.3	362.2	414.4	490.4	700
	36	91.07	291.7	339.5	388.9	458.4	524.5	620.7	589
	40	75.40	360.2	419.1	480.2	565.9	647.5	766.3	477

Technical Data MH High Pressure Diaphragm Metering Pump With Single Metal Diaphragm

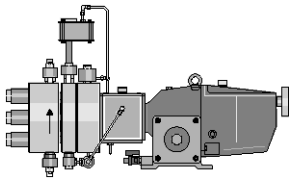

pk_2_141
MhR 150/6

Pump type	Plunger Ø	Stroke Volume	Capacity max. (theo.) in l/h at strokes/min (50 Hz)					Max. pressure
	mm	cm³/stroke	73	91	112	145	207	bar
MHS 35/	5	0.39	1.7	2.1	2.6	3.4	4.8	1,782

Pump type	Plunger Ø	Stroke Volume	Capacity max. (theo.) in l/h at strokes/min (50 Hz)				Max. pressure
	mm	cm³/stroke	58	77	116	145	bar
MHR 150/	6	0.90	3.1	4.2	6.3	7.8	3,000
	7	1.23	4.2	5.7	8.5	10.7	3,000

Pump type	Plunger Ø	Stroke Volume	Capacity max. (theo.) in l/h at strokes/min (50 Hz)						Max. pressure
	mm	cm³/stroke	72	90	117	134	156	173	bar
MHS 600/	11	3.80	16.4	20.4	26.6	30.5	35.6	39.4	3,000

3.9 Sigma/ 2 Plunger Metering Pumps

3.9.1 Sigma Plunger Metering Pumps

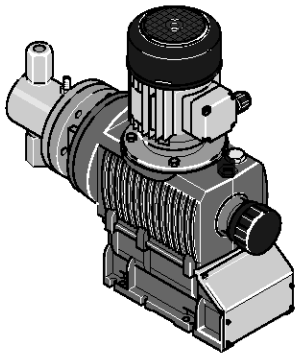

pk_2_006

The Sigma/ 2 motor plunger metering pump has a high-strength inner metal housing for those component parts subjected to load as well as an additional plastic housing to protect against corrosion. The capacity ranges between 2-76 l/h at a max. backpressure of 12-320 bar. The output can be adjusted by a self-locking rotary dial in 0.2 % steps via the stroke length (15 mm).

The reproducibility of the metering is better than ±1% in the stroke length range of 30% - 100% given defined conditions and correct installation. (The notes in the operating instructions must be observed.)

The rugged, corrosion-resistant metal-plastic housing is combined with three gearbox ratios and four liquid end sizes in stainless steel (W. No. 1.4571). The Sigma control type (SCKa) facilitates control via contact or analogue signals (e.g. 0/4-20 mA) which ensures a good adaptation, also to different metering tasks.

For safety-technical reasons, suitable overflow guards are to be installed in all motor metering pumps without integrated overload protections.

Sigma Basic Type SBKa

The Sigma Basic is a motor metering pump without its own internal electronic control system. The SBKa offers numerous different drive options, be it the three-phase standard motor (standard IP 55) or the single-phase AC motor. Metering pumps for use in Exe and EXde zones with ATEX approval are also available.

Different flanges are available any time so that the customers can use their own motors to drive the pump.

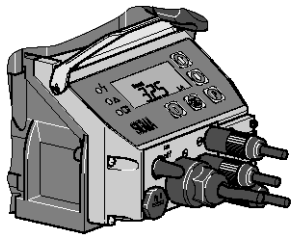

pk_2_104
Sigma Controller

Sigma Control Type SCKa

The Sigma/ 2 microprocessor version (standard IP 65) allows rapid and reliable adjustment to fluctuating metering requirements.

The control unit has the same control surface as the gamma/ L metering pump.

The microprocessor controller of the Sigma pumps, featuring the optimum combination of variable AC frequency combined with digital stroking frequency, ensures exact metering even in the lower minimum range due to individual stroke control.

With five programming keys the individual pump functions are easy to set. A backlit LCD gives information about the prevailing operating status. LEDs along with a fault-indicating or pacing relay act as operating and warning indicators to ensure monitoring of the pump function.

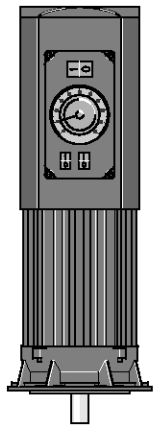

pk_2_103

Sigma Basic Type Control Functions

Stroke length actuator/controller

Actuator for automatic stroke length adjustment, actuating period approx. 1 sec for 1 % stroke length, 1 kΩ response signal potentiometer, enclosure rating IP 54.

Controller consists of actuator with servomotor and integrated servo control for stroke length adjustment via a standard signal. Standard signal input 0/4-20 mA, corresponds to stroke length 0 - 100 %. Automatic/ manual operation selection key for manual stroke adjustment. Mechanical status display of actual stroke length value output 0/4-20 mA for remote display.

Variable speed motors with integrated speed controller (identcode characteristic V)

Power supply 1 ph 230 V, 50/60 Hz, 0.37 kW.

External control with 0/4-20 mA (see pk_2_103)

(Speed Controllers see p. → 2-51)

Speed controllers in metal housing (identcode characteristic Z)

The speed controller assembly consists of a speed controller and a 0.37 kW variable speed motor.

(Speed Controllers see p. → 2-51)

3.9 Sigma/ 2 Plunger Metering Pumps

Technical Data

Type Sigma/ 2	With motor 1500 rpm at 50 Hz				With motor 1800 rpm at 60 Hz				Suction height	Perm. admiss. pressure suction side	Connector Suction/ Discharge Side	Shipping weight
	Delivery rate at max. backpressure			Max. stroke rate	Delivery rate at max. backpressure			Max. stroke rate				
	bar	l/h	ml/ stroke	Strokes/ min	psi	l/h	gph	Strokes/ min	mWC	bar	Rp-DN	kg
32002	320	1.9	0.46	71	4,627	2.3	0.61	84	5.0	160	1/4	24
23004	230	4.0	0.52	129	3,335	4.8	1.27	154	5.0	115	1/4	24
10006	100	6.4	0.55	195	1,450	7.6	2.01	233	5.0	50	1/4	24
14006	140	6.1	1.42	71	2,030	7.1	1.88	84	4.0	70	1/4	24
10011	100	11.0	1.43	129	1,450	13.1	3.46	153	4.0	50	1/4	24
05016	50	16.7	1.43	195	725	20.0	5.28	233	4.0	25	1/4	24
07012	70	12.4	2.90	71	1,015	14.8	3.91	85	4.0	35	1/4	24
04522	45	22.5	2.91	129	652	26.7	7.05	153	4.0	22.5	1/4	24
02534	25	34.1	2.92	195	363	40.8	10.78	233	4.0	12.5	1/4	24
04022	40	22.4	5.26	71	580	26.5	7.00	84	4.0	20	3/8	25
02541	25	41.5	5.37	129	363	49.2	13.00	153	4.0	12.5	3/8	25
01264	12	64.0	5.45	195	174	76.0	20.08	233	4.0	6	3/8	25

Note: For the SCKa pump types the 60 capacity data (since internal 60 Hz operation) applies, however max. 200 strokes/min.

Materials in contact with medium

Material	Liquid end	Suction/discharge connector	Seals/ball seat	Valve balls	Ball seat
SST	stainless steel	stainless steel	PTFE or	ceramic	stainless steel
	mat. no. 1.4404	mat. no. 1.4404	PTFE with graphite		mat. no. 1.4404

Motor Data

Identcode characteristic		Power supply			Remarks
S	3 ph, IP 55	220-240 V/380-420 V	50 Hz	0.25 kW	
		250-280 V/440-480 V	60 Hz	0.25 kW	
M	1 ph AC, IP 55	230 V ± 5%	50/60 Hz	0.18 kW	
N	1 ph AC, IP 55	115 V ± 5 %	60 Hz	0.18 kW	
L1	3 ph, II2GEExeIIT3	220-240 V/380-420 V	50 Hz	0.18 kW	
L2	3 ph, II2GEExdIICT4	220-240 V/380-420 V	50 Hz	0.18 kW	with PTC thermistor, speed adjustment range 1:5
P1	3 ph, II2GEExeIIT3	250-280 V/440-480 V	60 Hz	0.18 kW	
P2	3 ph, II2GEExdIICT4	250-280 V/440-480 V	60 Hz	0.21 kW	with PTC thermistor, speed adjustment range 1:5
R	3 ph, IP 55	230 V/400 V	50/60 Hz	0.37 kW	with PTC thermistor, speed adjustment range 1:20 with external fan 1 ph 230 V; 50/60 Hz
V0	1 ph, IP 55	230 V ± 5 %	50/60 Hz	0.37 kW	variable-speed motor with integrated frequency converter

For further information you can request motor data sheets.

Custom motors and/or custom motor flanges may be supplied on request.

The motors are designed in compliance with the Ecodesign Directive 2005/32/EC (IE2 standard).

Note concerning installation in Ex-zones:

With effect from 01.07.2003, only pumps with a suitable identification and rating plate in accordance with ATEX Directive 94/9/EC may be used in areas with potentially explosive atmospheres. The explosion group, category and degree of protection stated on the rating plate must correspond to, or be higher than, the conditions specified in the intended application.

3.9 Sigma/ 2 Plunger Metering Pumps

3.9.2 Sigma/ 2 HK Spare Parts Kits

Consisting of: 1 ceramic metering plunger, 4 valve balls, 4 ball seat discs, 2 ball PTFE/graphite ball seals, 2 plunger guides, 14 flat seals, 2 O-rings.

	Type	Order no.
Liquid end FK 08	applies to identcode: 32002, 23004, 10006	1001572
Liquid end FK 12,5	applies to identcode: 14006, 10011, 05016	910470
Liquid end FK 25	applies to identcode: 07012, 04522, 02534	910471
Liquid end FK 50	applies to identcode: 04022, 02541, 01264	910472

Note concerning installation in Ex-zones:

With effect from 01.07.2003, only pumps with a suitable identification and rating plate in accordance with ATEX Directive 94/9/EC may be used in areas with potentially explosive atmospheres. The explosion group, category and degree of protection stated on the rating plate must correspond to, or be higher than, the conditions specified in the intended application.

3.9 Sigma/ 2 Plunger Metering Pumps

3.9.3 Identcode Ordering System SBKa

Sigma Basic Type SBKa

SBKa	Drive type												
	HK	Main drive, plunger											
		Type*											
		32002											
		23004											
		10006											
		14006											
		10011											
		05016											
		07012											
		04522											
		02534											
		04022											
		02541											
		01264											
			Material Liquid end										
			SS	Stainless steel									
				Sealing material*									
				T	PTFE								
					Displacement body*								
					4	Plunger (oxide ceramic)							
						Liquid end version							
						0	No spring (standard)						
						1	With 2 valve springs, Hastelloy C, 0.1 bar						
							Hydraulic connection						
							0	Standard threaded connector (according to technical data)					
								Version					
								0	With ProMinent® logo (standard)				
								1	Without ProMinent® logo				
								M	Modified				
									Electrical power supply				
									S	3 ph, 230 V/400 V 50/60 Hz, 0.18 kW			
									M	1 ph, AC, 230 V/ 50/60 Hz, 0.18 kW			
									N	1 ph, AC 115 V 60 Hz, 0.18 kW			
									L	3 ph, 230 V/400 V, 50 Hz, (EExe, EExd), 0.18 kW			
									P	3 ph, 230 V/400 V, 60 Hz, (EExe, EExd), 0.18 kW			
									R	3 ph, variable speed motor, 230/400 V, 0.37 kW			
									V (0)	Variable speed motor with integrated SC 1 pH, 230 V, 50/60 Hz			
									Z	1 ph, variable speed set 230 V, 50/60 Hz			
									1	No motor, with B 14 flange (size 71 (DIN)			
									2	No motor, C 56 flange (NEMA)			
									3	No motor, B 5 size 63 (DIN)			
										Enclosure rating			
										0	IP 55 (standard)		
										1	Exe motor version ATEX-T3		
										2	Exd motor version ATEX-T4		
										A	ATEX power end		
											Stroke sensor		
											0	No stroke sensor (standard)	
											2	Pacing relay (reed relay)	
											3	Stroke sensor (Namur) for hazardous locations	
												Stroke length adjustment	
												0	Manual (standard)
												1	With stroke positioning motor, 230 V/50/60 Hz
												2	With stroke positioning motor, 115 V/50/60 Hz
												3	With stroke control motor 0...20 mA 230 V/50/60 Hz
												4	With stroke control motor 4...20 mA 230 V/50/60 Hz
												5	With stroke control motor 0...20 mA 115 V/50/60 Hz
												6	With stroke control motor 4...20 mA 115 V/50/60 Hz

* Digits 1 - 3=back pressure [bar]; digits 4 + 5=feed rate [l/h]

3.9 Sigma/ 2 Plunger Metering Pumps

3.9.4 Identcode Ordering System SCKa

Sigma Control Type SCKa

SCKa	Drive type														
	HK	Main drive, plunger													
		Type*													
		32002													
		23004													
		10006													
		14006													
		10011													
		05016													
		07012													
		04522													
		02534													
		04022													
		02541													
		01264													
			Material Liquid end												
			SS	Stainless steel											
				Sealing material*											
				T	PTFE										
					Displacement body*										
					4	Plunger (oxide ceramic)									
						Liquid end version									
						0	No spring (standard)								
						1	With 2 valve springs, Hastelloy C 4, 0.1 bar								
							Hydraulic connection								
							0	Standard threaded connector (according to technical data)							
								Version							
								0	With ProMinent® logo						
								1	Without ProMinent® logo						
									Electrical power supply						
									U	1 ph 100-230 V ±10 %, 50/60 Hz					
										Cable and plug					
										A	2 m European				
										B	2 m Swiss				
										C	2 m Australian				
										D	2 m USA				
											Relay				
											0	No relay			
											1	With fault indicating relay 1x changeover 230 V – 2A			
											3	With fault indicating relay 1x changeover 230 V – 2A			
											4	as 1 + pacing relay 2x normally open 24 V - 100 mA			
											5	As 3 with pacing relay 2x normally open 24 V – 100 mA			
											A	shut-off and warning relays normally closed 2x normally open 24 V - 100 mA			
											F	Power relay normally closed 1x changeover 230 V - 8 A			
												Control variant			
												0	Manual + external with pulse control		
												1	Manual + external + pulse control + analogue		
													Access code		
													0	No access code	
													1	With access code	
														Metering monitor	
														0	Input with pulse evaluation
														1	input with cont. evaluation
															Stroke length adjustment
															0 Manual

* Digits 1 - 3=back pressure [bar]; digits 4 + 5=feed rate [l/h]

3.10 Meta Plunger Metering Pumps

3.10.1 Meta Plunger Metering Pumps

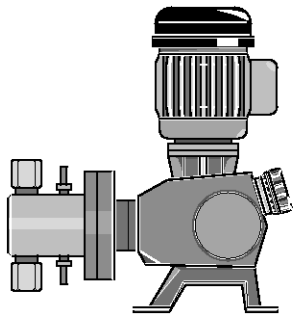

pk_2_010

The Meta plunger pump is a standard sized metering pump driven by an 0.18 kW/37 kW dual wound three phase motor. 230/400 V, 50/60 Hz power supply, enclosure rating IP 55, insulation class F. Stroke length is adjustable between 0…15.5 mm in 0.2 % steps. Worm gears in a choice of four reduction ratios, and cam spring follower mechanisms are built into a salt water-resistant and acrylic resin coated housing. Liquid end parts in contact with chemicals are listed below. The suction lift varies depending upon the density and viscosity of the feed chemical, and connecting pipework dimensions. Under defined conditions and providing installation is correct, reproducible metering accuracy is better than ±0.5 % at a stroke length range of between 10 % and 100 %. (Guidelines given in the instruction manual must be followed precisely.) For technical safety reasons, appropriate equipment must be installed to prevent current overload to motorised metering pumps.

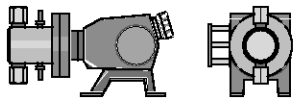

pk_2_011

Meta Add-On Pumps

Meta add-on pumps can be connected up with Meta main pumps to form duplex or triplex pumps. (In certain cases more add-on pumps can be operated with a main pump with reduced back pressures). The multiplexed pumps can also be ordered and supplied as complete systems, consisting of a main pump and the required number of add-on pumps. Multiplexed pumps can also be retrofitted by the operator. All necessary fittings and connectors are supplied with the add-on pump. They are connected to the main pump at the power output side, i.e. the stroke rate of the add-on pump is identical to that of the main pump.

Actuation of Meta metering pumps

(Speed Controllers see p. → 2-51)

Speed controllers in metal housing (Identcode characteristic Z)

Frequency changer built into IP 54 protective housing and main switch designed for max. 0.37 kW motor output.

Externally controlled with 0/4-20 mA / 0-10 V to correspond to 0-50 (60) Hz output frequency.

Integrated controller with versatile functions e.g. switching between external/internal control. In the case of internal control, frequency input via arrow keys. Multi-lingual fault message display etc. and motor temperature monitoring (thermistor-protection).

The speed controller assembly consists of a speed controller and a variable speed motor (see also identcode characteristic R).

3.10 Meta Plunger Metering Pumps

Technical Data

Type MTKa	With motor 1500 rpm at 50 Hz				With motor 1800 rpm at 60 Hz			Suction height	Perm. admiss. pressure suction side	Connector Suction/ Discharge Side	Motor rating	Shipping weight
	Delivery rate at max. backpressure			Max. stroke rate	Delivery rate at max. backpressure		Max. stroke rate					
	bar	l/h	ml/ stroke	Strokes/ min	psi	l/h / gph	Strokes/ min	mWC	bar	Rp-DN	W	kg
21606	216	6.1	1.42	72	3,130	7.3/1.9	86	4.0	108	1/4	180	18
24006	240	6.1	1.42	72	3,477	7.3/1.9	86	4.0	120	1/4	370	20
16208	162	8.1	1.42	96	2,347	9.8/2.6	115	4.0	81	1/4	180	18
22508	225	8.1	1.42	96	3,260	9.8/2.6	115	4.0	112.5	1/4	370	20
12910	129	10.2	1.42	120	1,878	12.2/3.2	144	4.0	64.5	1/4	180	18
21610	216	10.2	1.42	120	3,130	12.2/3.2	144	4.0	108	1/4	370	20
10812	108	12.2	1.42	144	1,565	14.7/3.9	173	4.0	54	1/4	180	18
21012	210	12.2	1.42	144	3,043	14.7/3.9	173	4.0	105	1/4	370	20
10213	102	13.0	3.01	72	1,479	15.6/4.1	86	4.0	51	1/4	180	18
11313	113	13.0	3.01	72	1,644	15.6/4.1	86	4.0	56.5	1/4	370	20
07617	76	17.3	3.01	96	1,109	20.8/5.5	115	4.0	38	1/4	180	18
10617	106	17.3	3.01	96	1,541	20.8/5.5	115	4.0	53	1/4	370	20
06122	61	21.7	3.01	120	888	26.0/6.9	144	4.0	30.5	1/4	180	18
10222	102	21.7	3.01	120	1,479	26.0/6.9	144	4.0	51	1/4	370	20
05126	51	26.0	3.01	144	740	31.2/8.2	173	4.0	25.5	1/4	180	18
09926	99	26.0	3.01	144	1,438	31.2/8.2	173	4.0	49.5	1/4	370	20
05425	54	24.6	5.71	72	782	29.5/7.8	86	4.0	27	3/8	180	18
06025	60	24.6	5.71	72	869	29.5/7.8	86	4.0	30	3/8	370	20
04033	40	32.8	5.71	96	587	39.4/10.4	115	4.0	20	3/8	180	18
05633	56	32.8	5.71	96	815	39.4/10.4	115	4.0	28	3/8	370	20
03241	32	41.1	5.71	120	469	49.3/13.0	144	4.0	16	3/8	180	18
05441	54	41.1	5.71	120	782	49.3/13.0	144	4.0	27	3/8	370	20
02749	27	49.3	5.71	144	391	59.2/15.6	173	4.0	13.5	3/8	180	18
05249	52	49.3	5.71	144	761	59.2/15.6	173	4.0	26	3/8	370	20

Materials in contact with medium

Material	Liquid end	Suction/discharge connector	Seals	Valve balls	Valve seat	Plungers
SST	stainless steel	stainless steel	PTFE	ceramic	stainless steel	ceramic
	mat. no. 1.4404	mat. no. 1.4404	PTFE with graphite		mat. no. 1.4404	

Motor Data

Identcode characteristic	Voltage supply			Remarks
S	3 ph, IP 55	220-240 V/380-420 V	50 Hz	0.18/0.37 kW	
		250-280 V/440-480 V	60 Hz	0.18/0.37 kW	
M	1 ph AC, IP 55	230 V ±5%	50/60 Hz	0.37 kW	
N	1 ph AC, IP 55	115 V ±5 %	60 Hz	0.37 kW	
L1	3 ph, II2GEExeIIT3	220-240 V/380-420 V	50 Hz	0.18/0.37 kW	
L2	3 ph, II2GEExdIICT4	220-240 V/380-420 V	50 Hz	0.18/0.37 kW	with PTC, speed adjustment range 1:5
P1	3 ph, II2GEExeIIT3	250-280 V/440-480 V	60 Hz	0.18/0.37 kW	
P2	3 ph, II2GEExdIICT4	250-280 V/440-480 V	60 Hz	0.18/0.37 kW	with PTC, speed adjustment range 1:5
R	3 ph, IP 55	230 V/400 V	50/60 Hz	0.37 kW	with PTC, speed adjustment range 1:20 with separate fan 1 ph 230 V ; 50/60Hz
V0	1 ph, IP 55	230 V ±5 %	50/60 Hz	0.37 kW	Variable speed motor with integrated frequency converter

The motor output depends on the pump type (see techn. data).

For further information, please request motor data sheets.

Customised motors or customised motor flanges are available on request.
The motors are designed in compliance with the Ecodesign Directive 2005/32/EC (IE2 standard).

Note concerning installation in Ex-zones:

With effect from 01.07.2003, only pumps with a suitable identification and rating plate in accordance with ATEX Directive 94/9/EC may be used in areas with potentially explosive atmospheres. The explosion group, category and degree of protection stated on the rating plate must correspond to, or be higher than, the conditions specified in the intended application.

3.10 Meta Plunger Metering Pumps

3.10.2 Identcode Ordering System MTKa

Meta Plunger Metering Pump Version a

MTKa	Drive type											
	H	Main drive										
	A	Add-on drive										
		Type*										
		02749	05441	10213	16208							
		03241	05633	10222	21012							
		04033	06025	10617	21606							
		05126	06122	10812	21610							
		05249	07617	11313	22508							
		05425	09926	12910	24006							
			Material Liquid end									
			SS	Stainless steel								
				Sealing material*								
				T	PTFE							
					Displacement body*							
					S	Standard plunger, oxide ceramic						
						Liquid end version						
						0	No valve springs					
						1	With 2 valve springs, Hastelloy C, 0.1 bar					
							Hydraulic connection					
							0	Standard threaded connector (according to technical data)				
								Version				
								0	With ProMinent® logo (standard)			
								1	Without ProMinent® logo			
								M	Modified			
									Electrical power supply			
									S	3 ph, 230 V/400 V, 50/60 Hz (WBS)		
									M	1 ph, AC, 230 V, 50/60 Hz		
									N	1 ph, AC, 115 V, 60 Hz		
									L	3 ph, 230 V/400 V, 50 Hz, (Exe, Exd)		
									P	3 ph, 230 V/400 V, 60 Hz, (Exe, Exd)		
									R	3 ph, variable speed motor, 230 V/400 V		
									V (0)	Motor with integrated frequency converter		
									Z	1 ph, variable speed set 230 V, 50/60 Hz		
									0	Add-on pump (no motor)		
									1	No motor, with flange 90/63		
									2	No motor, with flange 140/71		
									3	No motor, with flange 160/71		
									4	No motor, with flange 56 C		
										Enclosure rating		
										0	IP 55 (standard)	
										1	Exe motor version ATEX-T3	
										2	Exd motor version ATEX-T4	
										A	ATEX power end	
											Stroke sensor	
											0	No stroke sensor (standard)
											1	With stroke sensor, Namur signal (Ex)
												Stroke length adjustment
												0 Manual (standard)
												2 With stroke positioning, 115 V/50/60 Hz
												A With stroke control motor 0...20 mA 230 V/50/60 Hz
												B With stroke control motor 4...20 mA 230 V/50/60 Hz
												C With stroke control motor 0...20 mA 115 V/50/60 Hz
												D With stroke control motor 4...20 mA 115 V/50/60 Hz

* Digits 1 - 3=back pressure [bar]; digits 4 + 5=feed rate [l/h]

3.10 Meta Plunger Metering Pumps

3.10.3 Spare Parts Kits

Spare parts kits for Meta (MTKa) Plunger Metering Pumps

consisting of:

1 ceramic plunger
4 valve balls
4 ball seat discs
2 PTFE /graphite plunger packing rings
2 plunger guides bands
14 flat seals
2 O-rings

	Order no.
Liquid end FK 12,5 Applies to identcode: 21606, 24006, 16208, 22508, 12910, 21610, 10812, 21012	910470
Liquid end FK 25 Applies to identcode: 10213, 11313, 07617, 10617, 06122, 10222, 05126, 09926	910471
Liquid end FK 50 Applies to identcode: 05425, 06025, 04033, 05633, 03241, 05441, 02749, 05249	910472

Base Frames for Meta MTMa and MTKa

A base frame is available for main and add-on pump combinations.

	Order no.
Base frame for main and one add-on pump	803897
Base frame for main and two add-on pumps	803898
Base frame for main and three add-on pumps	803899

Note concerning installation in Ex-zones:

With effect from 01.07.2003, only pumps with a suitable identification and rating plate in accordance with ATEX Directive 94/9/EC may be used in areas with potentially explosive atmospheres. The explosion group, category and degree of protection stated on the rating plate must correspond to, or be higher than, the conditions specified in the intended application.

3.11 Makro TZ Plunger Metering Pumps

3.11.1 Makro TZ Plunger Metering Pumps

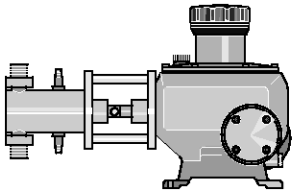

pk_2_019

The Makro TZ plunger pump is a standard sized metering pump which can be driven by either a 0.75 kW or 1.5 kW dual wound three phase motor. 230/400 V, 50/60 Hz power supply, enclosure rating IP 55, insulation class F. Stroke length is 0...20 mm and is adjustable to within 0.5 % accuracy. The shift ring mechanism, in a choice of four reduction ratios, is built into a salt water-resistant and acrylic resin coated cast housing. Liquid ends are made of stainless steel 1.4571, and plungers are in oxide ceramic or stainless steel with a ceramic anti-wear coating. The suction lift varies depending upon the density and viscosity of the feed chemical, and connecting pipework dimensions. Under defined conditions and providing installation is correct, reproducible metering accuracy is better than ±0.5 % at a stroke length range of between 10 % and 100 %. (Guidelines given in the instruction manual must be followed precisely.) For technical safety reasons, appropriate equipment must be installed to prevent current overload to motorised metering pumps.

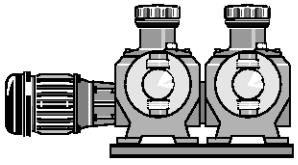

pk_2_018

Makro TZ TZKaA Add-On Pumps

Makro TZ add-on pumps (TZ-AK) can be connected up with Makro TZ main pumps (TZ-HK) to form duplex or triplex pumps. (In certain cases more add-on pumps can be operated with a main pump with reduced back pressures). The multiplexed pumps can also be ordered and supplied as complete systems, consisting of a TZ-HK and the required number of TZ-AKs. Multiplexed pumps can also be retrofitted by the operator. All necessary fittings and connectors are supplied with the TZ-AK. The TZ-AK stroke rate is set independently of the TZ-HK, as each TZ-AK governs its own reducing gear. The main power end can be fitted with a 2.2 kW/3 kW motor for this purpose. A base frame is required when using add-on pumps.

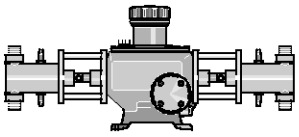

pk_2_020

Makro TZ Double Head Version TZKaD (Main Pump) /TZKaB (Add-On Pump)

The Makro TZ HKD and AKD are similar to simplex pumps, but with an additional liquid end.

The gearbox coupler causes the pumps to operate counter to one another, i.e. the discharge stroke in the first is matched by a suction stroke in the second.

Makro TZ Metering Pump Actuators

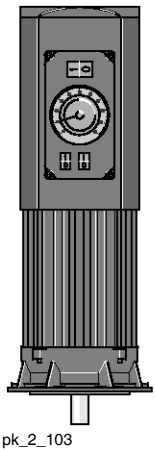

pk_2_103

Stroke length actuator/stroke controller Makro TZ

Actuator Makro TZ

Servomotor for automatic stroke length adjustment, actuating time approx. 1 sec. for 1 % stroke length, equipped with 2 limit switches for min./max. position, feedback potentiometer 1 k?; IP rating: IP 52. Electrical connection 230 V (±10 %), 50/60 Hz, approx. 40 W, mech. stroke position indicator present at drive Makro TZ.

Special voltage/higher IP ratings/Ex protection on request.

Stroke controller Makro TZ

Variable speed drive consisting of actuator with motor actuator and integrated microprocessor controller for stroke length adjustment via a standard signal. For technical data see actuator.

Design:

Standard current input 0/4-20 mA, corresponds to stroke length 0-100%, internal switch for manual/automatic operation, key switch for stroke adjustment in manual operation mode. Actual value output 0/4-20 mA for remote display.

Variable speed motors with integrated frequency converter (Identcode characteristic V)

Power supply 3 ph 230 V, 50/60 Hz, 2.2 kW.

Optional 0/4-20 mA external control. (see Fig. pk_2_103)

(Speed Controllers see p. → 2-51)

Speed controllers in metal housing (Identcode characteristic Z)

The speed controller set comprises frequency converter and 2.2 kW variable speed motor.

(Speed Controllers see p. → 2-51)

3.11 Makro TZ Plunger Metering Pumps

Technical Data

Typ TZKa	With motor 1500 rpm at 50 Hz				With motor 1800 rpm at 60 Hz			Suction height	Connection, suction/ pressure side	Shipping weight	Plunger Ø
	Delivery rate at max. backpressure			Max. stroke rate	Delivery rate at max. backpressure		Max. stroke rate				
	bar	l/h	ml/ stroke	Strokes/ min	psi	l/h / gph	Strokes/ min	mWC	G–DN	kg	mm
320009	320	8.7	2.0	72	4,627	10/2.6	86	4.0	Rp 1/4**–8	50	12
320012	320	11.6	2.0	96	4,627	14/3.7	115	4.0	Rp 1/4**–8	50	12
320014	320	14.5	2.0	120	4,627	17/4.5	144	4.0	Rp 1/4**–8	50	12
320017	320	17.4	2.0	144	4,627	21/5.5	173	4.0	Rp 1/4**–8	50	12
320018	320	17.7	4.1	72	4,627	21/5.5	86	4.0	Rp 1/4**–8	50	17
320024	320	23.6	4.1	96	4,627	28/7.4	115	4.0	Rp 1/4**–8	54	17
320030	320	29.5	4.1	120	4,627	35/9.2	144	4.0	Rp 1/4**–8	54	17
313035	313	35.4	4.1	144	4,526	42/11.1	173	4.0	Rp 1/4**–8	54	17
192033	192	32.9	7.6	72	2,776	39/10.3	86	4.0	Rp 3/8**–10	55	23
192044	192	43.9	7.6	96	2,776	59/15.6	115	4.0	Rp 3/8**–10	55	23
192055	192	54.8	7.6	120	2,776	66/17.4	144	4.0	Rp 3/8**–10	55	23
168066	168	65.8	7.6	144	2,437	79/20.9	173	4.0	Rp 3/8**–10	55	23
113057	113	57.5	13.3	72	1,634	69/18.2	86	4.0	Rp 3/8**–10	56	30
113077	113	76.6	13.3	96	1,634	92/24.3	115	4.0	Rp 3/8**–10	56	30
113096	113	95.8	13.3	120	1,634	115/30.4	144	4.0	Rp 3/8**–10	56	30
096115	96	114.9	13.3	144	1,392	138/36.5	173	4.0	Rp 3/8**–10	56	30
063104	63	104.3	24.2	72	911	125/33.0	86	4.0	G 1 1/4–20	58	40
063139	63	139.0	24.2	96	911	167/44.1	115	4.0	G 1 1/4–20	58	40
063174	63	173.8	24.2	120	914	209/55.2	144	4.0	G 1 1/4–20	58	40
052208	52	208.5	24.2	144	754	250/66.0	173	4.0	G 1 1/4–20	58	40
040163	40	162.9	37.7	72	578	195/51.5	86	4.0	G 1 1/4–20	58	50
040217	40	217.2	37.7	96	578	261/68.9	115	4.0	G 1 1/4–20	58	50
040271	40	271.5	37.7	120	580	326/86.1	144	4.0	G 1 1/4–20	58	50
033326	33	325.8	37.7	144	479	391/103.3	173	4.0	G 1 1/4–20	58	50
028237	28	237.0	54.9	72	405	284/75.0	86	4.0	G 1 1/2–25	62	60
028316	28	315.9	54.9	96	405	379/100.1	115	4.0	G 1 1/2–25	62	60
027395	27	394.9	54.9	120	392	474/125.2	144	4.0	G 1 1/2–25	62	60
022474	22	473.9	54.9	144	319	569/150.3	173	4.0	G 1 1/2–25	62	60
020322	20	322.5	74.7	72	289	387/102.2	86	4.0	G 1 1/2–25	62	70
020430	20	430.0	74.7	96	289	516/136.3	115	4.0	G 1 1/2–25	62	70
020538	20	537.6	74.7	120	290	645/170.4	144	4.0	G 1 1/2–25	62	70
016645	16	645.1	74.7	144	232	774/204.5	173	4.0	G 1 1/2–25	62	70
014475	14	475.1	110.0	72	202	571/150.8	86	4.0	G 2 1/4–40	68	85
014634	14	634.1	110.0	96	202	761/201.0	115	4.0	G 2 1/4–40	68	85
013793	13	792.6	110.0	120	189	951/251.2	144	4.0	G 2 1/4–40	68	85
011951	11	951.1	110.0	144	160	1,141/301.4	173	4.0	G 2 1/4–40	68	85

The permissible admission pressure on the suction side is approx. 50 % of max. permissible back pressure.

** The suction and discharge connectors Rp 1/4 and Rp 3/8 are inner threaded and fitted with double ball valves.

Materials in contact with medium

Pump type	Hydraulical Ø mm	Liquid end connection	Suction/pressure seals	Ball seat	Valve balls	Plunger
	…12 S to 30 S	Stainless steel 1.4571/1.4404	1.4571/1.4404	SS/PTFE	Oxide ceramics	Stainless steel/ ceramic
	…40 S to 70 S	Stainless steel 1.4571/1.4404	1.4581	PTFE/PTFE	Stainless steel 1.4401	Stainless steel/ ceramic
	…85 S	Stainless steel 1.4571/1.4404	1.4581	PTFE/PTFE	1.4404 (plate) Hast. C (spring)	Stainless steel/ ceramic

3.11 Makro TZ Plunger Metering Pumps

3.11.2 Identcode Ordering System TZKa

Motor metering pump TZKa 20 (plunger metering pump)

TZKa	Drive type													
	H	Main drive												
	A	Add-on												
	D	Double main drive												
	B	Double add-on												
		Type*												
		320009	320030	113057	063174	028237	020538							
		320012	313035	113077	052208	028316	016645							
		320014	192033	113096	040163	027395	014475							
		320017	192044	096115	040217	022474	014634							
		320018	192055	063104	040271	020322	013793							
		320024	168066	063139	033326	020430	011951							
			Material Liquid end											
			SS	Stainless steel										
				Sealing material*										
				T	PTFE									
					Displacement body									
					S	Stainless steel plunger, chromoxide coated								
						Liquid end version								
						0	No valve springs							
						1	With valve springs							
							Hydraulic connection							
							0	Standard connection						
							4	SS union nut and insert						
								Version						
								0	With ProMinent® logo, no frame					
								2	Without ProMinent® logo, no frame					
								A	With ProMinent® logo, with frame, simplex					
								B	With ProMinent® logo, with frame, duplex					
								C	With ProMinent® logo, with frame, triplex					
								M	Modified					
									Electrical power supply					
									S	3 ph. 230/400 V 50/60 Hz (WBS)				
									P	3 ph. 230/400 V 60 Hz (Exe, Exd)				
									L	3 ph. 230/400 V 50 Hz (Exe, Exd)				
									R	Variable speed motor 4 pole 230/400 V				
									V (0)	Variable speed motor with integr. frequency converter				
									V (2)	With integrated frequency converter (Exd)				
									Z	1 ph, variable speed control set 1 ph, 230 V, 50/60 Hz				
									4	No motor, with 56 C flange				
									7	No motor, with 120/80 flange				
									8	No motor, with 160/90 flange				
									0	Without motor, externally mounted drive				
										Enclosure rating				
										0	IP 55 (Standard) ISO class F			
										1	Exe version ATEX-T3			
										2	Exd version ATEX-T4			
										A	ATEX power end			
											Stroke sensor			
											0	No stroke sensor		
											1	With stroke sensor (Namur)		
												Stroke length adjustment		
												0	Stroke length adjustment, man.	
												1	230 V stroke adjustment motor	
												2	115 V stroke adjustment motor	
												3	230 V 0-20 mA stroke controller	
												4	230 V 4-20 mA stroke controller	
												5	115 V 0-20 mA stroke controller	
												6	115 V 4-20 mA stroke controller	
													Application	
													0	Standard

* Digits 1 - 3=back pressure [bar]; digits 4 - 6=feed rate [l/h]

3.11 Makro TZ Plunger Metering Pumps

Motor Data

Identcode characteristic		Voltage supply			Remarks
S	3 ph, IP 55	220-240 V/380-420 V	50 Hz	1.5 kW	
		250-280 V/440-480 V	60 Hz	1.5 kW	
L1	3 ph, II2GEExeIIT3	220-240 V/380-420 V	50 Hz	1.5 kW	
L2	3 ph, II2GEExdIICT4	220-240 V/380-420 V	50 Hz	1.5 kW	with PTC, speed adjustment range 1:5
P1	3 ph, II2GEExeIIT3	250-280 V/440-480 V	60 Hz	1.5 kW	
P2	3 ph, II2GEExdIICT4	250-280 V/440-480 V	60 Hz	1.5 kW	with PTC, speed adjustment range 1:5
R	3 ph, IP 55	230 V/400 V	50/60 Hz	2.2 kW	with PTC, speed adjustment range 1:20 with separate fan 1 ph 230 V ; 50/60Hz
V0	3 ph, IP 55	400 V ±10 %	50/60 Hz	2.2 kW	Variable speed motor with integrated frequency converter
V2	3 ph, II2GEExdIICT4	400 V ±10 %	50/60 Hz	2.2 kW	Ex-variable speed motor with integrated frequency converter

Motor data sheets can be requested for more information.

Special motors or special motor flanges are available on request.

The motors are designed in compliance with the Ecodesign Directive 2005/32/EC (IE2 standard).

Note concerning installation in Ex-zones:

With effect from 01.07.2003, only pumps with a suitable identification and rating plate in accordance with ATEX Directive 94/9/EC may be used in areas with potentially explosive atmospheres. The explosion group, category and degree of protection stated on the rating plate must correspond to, or be higher than, the conditions specified in the intended application.

3.11.3 Spare Parts Kits

Spare parts kit, plunger metering pump

comprising:

valve balls
valve plate with spring
ball seat discs
PTFE/graphite plunger packing rings
plunger guides
flat seals/O rings

Spare parts kit Makro TZ

	Order no.
Spare parts kit Makro TZ FK 12/20 S DN 8	1019106
Spare parts kit Makro TZ FK 17/20 S DN 8	1019107
Spare parts kit Makro TZ FK 23/20 S DN 10	1019108
Spare parts kit Makro TZ FK 30/20 S DN 10	1019109
Spare parts kit Makro TZ FK 40/20 S DN 20	1019110
Spare parts kit Makro TZ FK 50/20 S DN 20	1019111
Spare parts kit Makro TZ FK 60/20 S DN 25	1019112
Spare parts kit Makro TZ FK 70/20 S DN 25	1019113
Spare parts kit Makro TZ FK 85/20 S DN 40	1019124

Note concerning installation in Ex-zones:

With effect from 01.07.2003, only pumps with a suitable identification and rating plate in accordance with ATEX Directive 94/9/EC may be used in areas with potentially explosive atmospheres. The explosion group, category and degree of protection stated on the rating plate must correspond to, or be higher than, the conditions specified in the intended application.

3.12 Makro/ 5 Plunger Metering Pumps

3.12.1 Makro/ 5 Plunger Metering Pumps

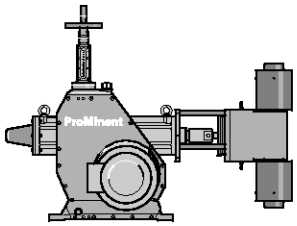

pk_2_075

The Makro/ 5 plunger metering pump is optionally driven by a 3 kW motor, 230/400 V, 50/60 Hz, enclosure rating IP 55, insulation class F. The stroke length is adjustable between 0…50 mm. The gearbox is housed in a sea water-resistant acrylic resin lacquered cast housing. The plunger liquid end is made of stainless steel 1.4571 and plungers are made of oxide ceramic or stainless steel with a ceramic wear-resistant coating. Metering reproducibility under defined conditions and when installed correctly, is better than ±0.5 % in a stroke length range of between 10 and 100 % (instructions in the operating instructions manual must be followed). The priming lift varies with the density and viscosity of the chemical, the connection pipework and the stroking rate of the pump. For all motor-driven metering pumps, for safety reasons, suitable overload protection must be provided during installation. A tensioning key is supplied as standard for re-tensioning packing rings.

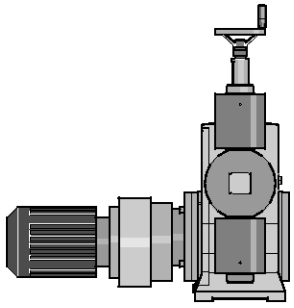
pk_2_076

Makro/ 5 M5KaA Add-On Pumps

The Makro/ 5 AK add-on plunger metering pump can be used with the Makro/ 5 HK plunger main power end to expand to a duplex or triplex system. (At reduced backpressures up to four add-on power ends can be combined with a single main power end). The customer can retrofit the add-on power ends on site. If required, the main power end can be fitted with a 3 kW or a 5.5 kW motor. You will require a base frame when connecting add on power ends.

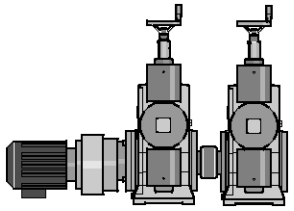
pk_2_077

Makro/ 5 Double Head Version M5KaD (Main Pump) /M5HaB (Add-On Pump)

For the Makro/ 5 HKD and AKD the same basic instructions as for the simplex pumps apply. It is also fitted, however, with a second liquid end.

The liquid ends operate in push-pull mode.

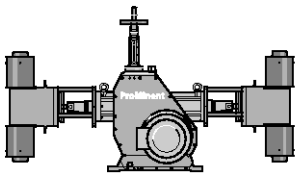

pk_2_078

Makro/ 5 Pump Control

Stroke length variable speed drive Makro/ 5

Variable speed drive consisting of actuator with motor actuator and integrated microprocessor controller for stroke length adjustment via a standard signal. Actuating time approx. 100 sec. for 100% stroke length, equipped with 2 limit switches for min./max. position, IP rating: IP 52. Electrical connection 230 V (±10 %), 50/60 Hz, approx. 40 W, mech. stroke position indicator present at drive Makro/ 5.

Special voltage/higher IP ratings/Ex protection on request.

Includes:

Standard current input 0/4-20 mA (corresponds to stroke length 0-100%); internal switch for manual/automatic operation, key switch for stroke adjustment in manual operation mode. Actual value output 0/4-20 mA for remote display.

Frequency converter for speed control in metal housing, IP rating 54

Frequency converter installed in protective housing IP 54 with integrated control unit and main switch suitable for the motor output stated in the following.

Externally controllable with 0/4-20 mA or 0-10V corresponding to 0-50 (60) Hz output frequency.

Integrated control unit with numerous functions such as toggling external/internal control. For internal control, frequency setting via arrow keys, error message on multi-lingual display etc.

Including evaluator for temperature monitoring of the motor (thermistor protection).

Stroke sensor with namur signal

Mounted at the crank drive of the Makro/5 gearbox. For a precise detection of each metering stroke, consisting of actuating cams and inductive proximity switch, switching signal according to Namur. In connection with electronic preselection counters suitable for batch metering or proportional metering in connection with the proportional control.

Retrofitting is only possible on factory premises.

Approved for ex-proof operation with IP rating EEx ia II C T6.

3.12 Makro/ 5 Plunger Metering Pumps

Technical Data

Typ M5kaH	With motor 1500 rpm at 50 Hz				With motor 1800 rpm at 60 Hz				Suction height	Connection, suction/ pressure side	Shipping weight	Plunger Ø
	Delivery rate at max. backpressure			Max. stroke rate	Delivery rate at max. backpressure			Max. stroke rate				
	bar	l/h	ml/ stroke	Strokes/ min	psi	l/h	gph	Strokes/ min	mWC	G–DN	kg	mm
3200038	320	38	11	60	4,640	44	12	71	3.0	Rp 1/4–8	300	17
3200048	320	48	11	75	4,640	56	15	89	3.0	Rp 1/4–8	300	17
3200066	320	66	11	103	4,640	78	21	123	3.0	Rp 1/4–8	300	17
3200085	320	85	11	133	4,640	101	27	159	3.0	Rp 3/8–10	300	17
3200100	320	100	11	156	–	–	–	–	3.0	Rp 3/8–10	300	17
2400070	240	70	21	60	3,480	82	22	71	3.0	Rp 3/8–10	300	23
2400088	240	88	21	75	3,480	104	27	89	3.0	Rp 3/8–10	300	23
2400121	240	121	21	103	3,480	144	38	123	3.0	Rp 3/8–10	300	23
2160157	216	157	21	133	3,132	187	49	159	3.0	Rp 3/8–10	300	23
1700184	170	184	21	156	–	–	–	–	3.0	G 1–15	300	23
1400120	140	120	35	60	2,030	142	38	71	3.0	G 1–15	302	30
1400151	140	151	35	75	2,030	179	47	89	3.0	G 1–15	302	30
1400207	140	207	35	103	2,030	247	65	123	3.0	G 1–15	302	30
1270267	127	267	35	133	1,842	319	84	159	3.0	G 1 1/4–20	302	30
1000314	100	314	35	156	–	–	–	–	3.0	G 1 1/4–20	302	30
0800214	80	214	63	60	1,160	253	67	71	3.0	G 1 1/4–20	303	40
0800268	80	268	63	75	1,160	318	84	89	3.0	G 1 1/4–20	303	40
0800368	80	368	63	103	1,160	439	116	123	3.0	G 1 1/4–20	303	40
0700476	70	476	63	133	1,015	569	150	159	3.0	G 1 1/2–25	303	40
0560558	56	558	63	156	–	–	–	–	3.0	G 1 1/2–25	303	40
0500335	50	335	98	60	725	396	105	71	3.0	G 1 1/2–25	303	50
0500419	50	419	98	75	725	497	131	89	3.0	G 1 1/2–25	303	50
0500576	50	576	98	103	725	687	181	123	3.0	G 1 1/2–25	303	50
0450744	45	744	98	133	653	889	235	159	3.0	G 2–32	303	50
0350872	35	872	98	156	–	–	–	–	3.0	G 2–32	303	50
0350483	35	483	141	60	507	571	151	71	3.0	G 1 1/2–25	311	60
0350604	35	604	141	75	507	716	189	89	3.0	G 1 1/2–25	311	60
0350829	35	829	141	103	507	989	261	123	3.0	G 2–32	311	60
0301071	30	1,071	141	133	435	1,280	338	159	3.0	G 2–32	311	60
0251257	25	1,257	141	156	–	–	–	–	3.0	G 2–32	311	60
0250658	25	658	192	60	363	778	206	71	3.0	G 2–32	311	70
0250822	25	822	192	75	363	975	258	89	3.0	G 2–32	311	70
0251129	25	1,129	192	103	363	1,348	356	123	3.0	G 2–32	311	70
0231458	23	1,458	192	133	334	1,743	460	159	3.0	G 2 1/4–40	311	70
0181710	18	1,710	192	156	–	–	–	–	3.0	G 2 1/4–40	311	70
0160970	16	970	284	60	232	1,147	303	71	3.0	G 2 1/4–40	317	85
0161212	16	1,212	284	75	232	1,438	380	89	3.0	G 2 1/4–40	317	85
0161665	16	1,665	284	103	232	1,988	525	123	3.0	G 2 1/4–40	317	85
0162150	16	2,150	284	133	232	2,570	679	159	3.0	G 2 3/4–50	317	85
0162522	16	2,522	284	156	–	–	–	–	3.0	G 2 3/4–50	317	85
0121343	12	1,343	393	60	174	1,589	420	71	3.0	G 2 3/4–50	331	100
0121678	12	1,678	393	75	174	1,991	526	89	3.0	G 2 3/4–50	331	100
0122305	12	2,305	393	103	174	2,752	727	123	3.0	G 2 3/4–50	331	100
0122977	12	2,977	393	133	174	3,558	940	159	3.0	G 2 3/4–50	331	100
0103491	10	3,491	393	156	–	–	–	–	3.0	G 2 3/4–50	331	100
0062269	6	2,269	664	60	87	2,684	709	71	3.0	G 2 1/2–65	350	130
0062837	6	2,837	664	75	87	3,366	889	89	3.0	G 2 1/2–65	350	130
0063896	6	3,896	664	103	87	4,652	1,229	123	3.0	G 2 1/2–65	350	130
0065031	6	5,031	664	133	87	6,014	1,589	159	3.0	G 2 1/2–65	350	130
0066000	6	6,000	664	156	–	–	–	–	3.0	G 2 1/2–65	350	130

3.12 Makro/ 5 Plunger Metering Pumps

3.12.2 Identcode Ordering System M5Ka

Makro/ 5 motor-driven metering pump

M5Ka	Drive type													
	H	Main drive												
	A	Add-on power end												
	D	Double main drive												
	B	Double add-on power end												
		Type*												
		3200038	1400120	0500335	0250658	0121343								
		3200048	1400151	0500419	0250822	0121678								
		3200066	1400207	0500576	0251129	0122305								
		3200085	1270267	0450744	0231458	0122977								
		3200100	1000314	0350872	0181710	0103491								
		2400070	0800214	0350483	0160970	0062269								
		2400088	0800268	0350604	0161212	0062837								
		2400121	0800368	0350829	0161665	0063896								
		2160157	0700476	0301071	0162150	0065031								
		1700184	0560558	0251257	0162522	0066000								
			Material Liquid end											
			SS	Stainless steel										
				Sealing material*										
				T	PTFE									
					Displacement body									
					S	Stainless steel plunger, chromoxide coated								
						Liquid end version								
						0	No valve springs							
						1	With valve springs							
							Hydraulic connection							
							0	Standard connection						
							4	SS union nut and insert						
								Version						
								0	With ProMinent® logo, no frame					
								2	No ProMinent® logo, no frame					
								A	With ProMinent® logo, with frame, simplex					
								B	With ProMinent® logo, with frame, duplex					
								C	With ProMinent® logo, with frame, triplex					
								D	With ProMinent® logo, with frame, quadruplex					
								M	Modified					
									Electrical power supply					
									S	3 ph. 230/400 V 50/60 Hz (WBS)				
									P	3 ph. 230/400 V 60 Hz (Exe, Exd)				
									L	3 ph. 230/400 V 50 Hz (Exe, Exd)				
									R	Variable speed motor 4 pole 230/400 V				
									V (0)	Motor with integrated frequency converter				
									V (2)	Motor with integrated frequency converter (Exd)				
									5	No motor, with IEC 100 gearbox				
									6	No motor, with IEC 112 gearbox				
									0	No motor, no gearbox				
										Enclosure rating				
										0	IP 55 (Standard) ISO class F			
										1	Exe version ATEX-T3			
										2	Exd version ATEX-T4			
										A	ATEX power end			
											Stroke sensor			
											0	No stroke sensor		
											1	With stroke sensor (Namur)		
												Stroke length adjustment		
												0	Stroke length adjustment, man.	
												3	230 V 0-20 mA stroke controller	
												4	230 V 4-20 mA stroke controller	
												5	115 V 0-20 mA stroke controller	
												6	115 V 4-20 mA stroke controller	
													Application	
													0	Standard

* Digits 1 - 3=back pressure [bar]; digits 4 - 7=feed rate [l/h]

3.12 Makro/ 5 Plunger Metering Pumps

Materials in contact with medium

	Liquid end	Suction/pressure connector	Valve seat/ seals	Valve balls	Plunger
Makro 5/50 HK …DN 8-DN 10	Stainless steel 1.4571/1.4404	1.4571/1.4404	SS/PTFE	Oxide ceramics	Stainless steel/ ceramic
Makro 5/50 HK …DN 15-DN 25	Stainless steel 1.4571/1.4404	1.4581	PTFE/PTFE	Stainless steel 1.4401	Stainless steel/ ceramic
Makro 5/50 HK …DN 32-DN 65	Stainless steel 1.4571/1.4404	1.4581/1.4404	PTFE/PTFE	Stainless steel 1.4404 (plate/spring)	Stainless steel/ ceramic

The permissible priming pressure on the suction side is approx. 50% of the max. permissible backpressure.

Motor Data

Identcode characteristic		Voltage supply			Remarks
S	3 ph, IP 55	220-240 V/380-420 V	50 Hz	3 kW	
		250-280 V/440-480 V	60 Hz	3 kW	
L1	3 ph, II2GEExeIIT3	220-240 V/380-420 V	50 Hz	3.6 kW	
L2	3 ph, II2GEExdIICT4	220-240 V/380-420 V	50 Hz	4 kW	with PTC, speed adjustment range 1:5
P1	3 ph, II2GEExeIIT3	250-280 V/440-480 V	60 Hz	3.6 kW	
P2	3 ph, II2GEExdIICT4	250-280 V/440-480 V	60 Hz	4 kW	with PTC, speed adjustment range 1:5
R	3 ph, IP 55	230 V/400 V	50/60 Hz	3 kW	with PTC, speed adjustment range 1:5
V0	3 ph, IP 55	400 V ±10 %	50/60 Hz	3 kW	Variable speed motor with integrated frequency converter
V2	3 ph, II2GEExeIICT4	400 V ±10 %	50/60 Hz	4 kW	Ex-variable speed motor with integrated frequency converter

Motor data sheets can be requested for more information.

Special motors or special motor flanges are available on request.

The motors are designed in compliance with the Ecodesign Directive 2005/32/EC (IE2 standard).

Note concerning installation in Ex-zones:

With effect from 01.07.2003, only pumps with a suitable identification and rating plate in accordance with ATEX Directive 94/9/EC may be used in areas with potentially explosive atmospheres. The explosion group, category and degree of protection stated on the rating plate must correspond to, or be higher than, the conditions specified in the intended application.

3.12 Makro/ 5 Plunger Metering Pumps

3.12.3 Spare Parts Kits

Spare parts kits plunger metering pumps

Comprising:

Valve balls
Valve plate with spring
Ball seat discs
PTFE/graphite plunger packing rings
Plunger rings
Flat seals/O-rings

Spare parts kits Makro/ 5

	Order no.
Spare parts kit Makro/ 5 FK 17/50 S DN 8	1005899
Spare parts kit Makro/ 5 FK 17/50 S DN 10	1005536
Spare parts kit Makro/ 5 FK 23/50 S DN 10	1005004
Spare parts kit Makro/ 5 FK 23/50 S DN 15	1005900
Spare parts kit Makro/ 5 FK 30/50 S DN 15	1005901
Spare parts kit Makro/ 5 FK 30/50 S DN 20	1005537
Spare parts kit Makro/ 5 FK 40/50 S DN 20	1005902
Spare parts kit Makro/ 5 FK 40/50 S DN 25	1005538
Spare parts kit Makro/ 5 FK 50/50 S DN 25	1005539
Spare parts kit Makro/ 5 FK 60/50 S DN 25	1005903
Spare parts kit Makro/ 5 FK 60/50 S DN 32	1005540
Spare parts kit Makro/ 5 FK 70/50 S DN 32	1005541
Spare parts kit Makro/ 5 FK 70/50 S DN 40	1005904
Spare parts kit Makro/ 5 FK 85/50 S DN 40	1005542
Spare parts kit Makro/ 5 FK 85/50 S DN 50	1005905
Spare parts kit Makro/ 5 FK 100/50 S DN 50	1005543
Spare parts kit Makro/ 5 FK 130/50 S DN 65	1005544

3.13 Orlita® PS Plunger Metering Pumps

3.13.1 ORLITA® PS Plunger Metering Pumps

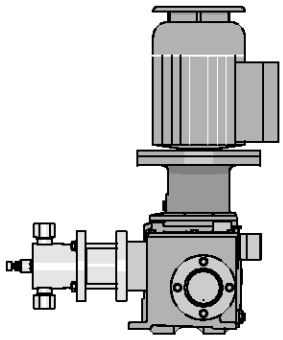

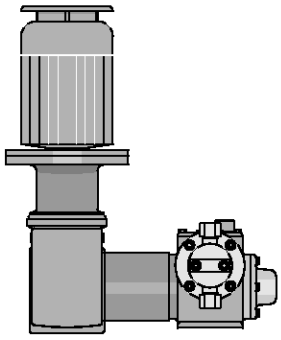

pk_2_123

Plunger head with stuffing box packing. The plunger oscillates in the cylinder and displaces the medium to be metered.

The plunger packing can also be adjusted in operation using the front clamp screw. The lantern mounted at the rear head end can be used as annulus collector for leakages. From there, the leakage can be drained or a medium to seal, flush or lubricate the pump can be fed. As suction or pressure valves, ball valves are used which are low-wearing, self-cleaning and show a low pressure loss ($NPSH_R$).

All parts coming into contact with the product are made of stainless steel with PTFE seals.

Pump type	Plunger Ø mm	Stroke Volume cm³/stroke	Capacity max. (theo.) in l/h at strokes/min (50 Hz) 73	91	112	145	207	Max. pressure bar
PS 18/	6	0.42	1.8	2.3	2.8	3.6	5.2	250
	7	0.58	2.5	3.1	3.8	5.0	7.1	250
	8	0.75	3.2	4.1	5.0	6.5	9.3	250
	10	1.18	5.1	6.4	7.8	10.2	14.6	200
	12	1.70	7.3	9.2	11.3	14.7	21.0	139
	16	3.02	13.1	16.4	20.1	26.2	37.4	78
	20	4.71	20.5	25.6	31.5	41.0	58.5	50
	25	7.36	32.0	40.0	49.2	64.0	91.5	32
	30	10.60	46.1	57.6	70.9	92.2	131.7	22
	36	15.27	66.4	83.0	102.1	132.8	189.7	15
	40	18.85	82.0	102.4	126.1	163.9	234.2	12
	50	29.45	128.1	160.1	197.1	256.2	366.0	8

Pump type	Plunger Ø mm	Stroke Volume cm³/stroke	Capacity max. (theo.) in l/h at strokes/min (50 Hz) 73	91	112	145	207	Max. pressure bar
PS 35/	8	1.01	4.3	5.4	6.7	8.7	12.4	250
	10	1.57	6.8	8.5	10.5	13.6	19.5	250
	12	2.26	9.8	12.3	15.1	19.6	28.1	250
	16	4.02	17.4	21.8	26.9	34.9	49.9	157
	20	6.28	27.3	34.1	42.0	54.6	78.0	100
	25	9.82	42.7	53.3	65.7	85.4	122.0	64
	30	14.14	61.5	76.8	94.6	122.9	175.7	44
	36	20.36	88.5	110.6	136.2	177.1	253.0	31
	40	25.13	109.3	136.6	168.2	218.6	312.3	25
	50	39.27	170.8	213.5	262.8	341.6	488.0	16
	65	66.37	288.6	360.8	444.1	577.3	824.8	9
	80	100.53	437.3	546.6	672.7	874.6	1,249.4	6
	100	157.08	683.3	854.1	1,051.2	1,366.5	1,952.2	4

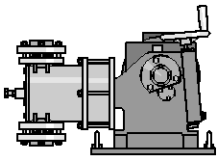

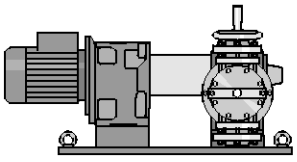

pk_2_090_1

Pump type	Plunger Ø mm	Stroke Volume cm³/stroke	Capacity max. (theo.) in l/h at strokes/min (50 Hz) 78	98	122	134	155	182	Max. pressure bar
PS 80/	20	6.28	29.3	37.0	46.0	50.6	58.4	68.5	250
	25	9.82	45.9	57.8	71.9	79.1	91.3	107.1	250
	30	14.14	66.1	83.2	103.5	113.9	131.5	154.3	178
	36	20.36	95.2	119.9	149.0	164.1	189.4	222.2	123
	40	25.13	117.5	148.0	184.0	202.6	233.8	274.3	100
	50	39.27	183.6	231.3	287.5	316.6	365.4	428.6	64
	60	56.55	264.5	333.0	414.1	455.9	526.1	617.2	40
	65	66.37	310.4	390.9	486.0	535.1	617.5	724.4	38
	80	100.53	470.2	592.1	736.2	810.5	935.4	1,097.3	25
	100	157.08	734.7	925.2	1,150.3	1,266.5	1,461.6	1,714.6	16
	125	245.44	1,148.0	1,445.7	1,797.3	1,978.0	2,283.7	2,679.1	10
	140	307.88	1,440.0	1,813.4	2,254.6	2,482.4	2,864.7	3,360.7	8
	160	402.12	1,880.9	2,368.6	2,944.8	3,242.3	3,741.6	4,389.5	6

3.13 Orlita® PS Plunger Metering Pumps

Pump type	Plunger Ø mm	Stroke Volume cm³/stroke	Capacity max. (theo.) in l/h at strokes/min (50 Hz) 72	92	107	134	152	171	Max. pressure bar
PS 180/	30	28.27	121.4	155.2	181.9	226.9	257.3	290.0	229
	36	40.72	174.9	223.6	262.0	326.7	370.5	417.7	159
	40	50.27	215.9	276.0	323.4	403.4	457.4	515.7	129
	50	78.54	337.4	431.3	505.4	630.3	714.7	805.7	82
	54	91.61	393.5	503.1	589.4	735.2	833.6	939.8	70
	65	132.73	570.2	729.0	854.1	1,065.2	1,207.9	1,361.7	48
	70	153.94	661.3	845.4	990.5	1,235.4	1,400.9	1,579.3	42
	80	201.06	863.8	1,104.3	1,293.8	1,613.6	1,829.7	2,062.7	32
	94	277.59	1,192.6	1,524.6	1,786.3	2,227.9	2,526.2	2,847.9	23
	125	490.87	2,108.9	2,696.0	3,158.7	3,939.6	4,467.1	5,036.0	13
	140	615.75	2,645.4	3,381.9	3,962.3	4,941.9	5,603.6	6,317.2	10
	160	804.25	3,455.2	4,417.2	5,175.2	6,454.7	7,318.9	8,251.1	8
	200	1,256.64	5,398.8	6,901.9	8,086.3	10,085.5	11,435.9	12,892.3	5

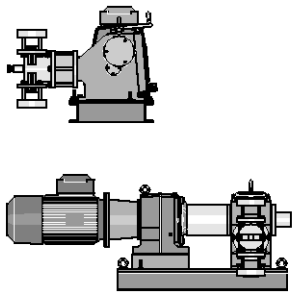

pk_2_124

Pump type	Plunger Ø mm	Stroke Volume cm³/stroke	Capacity max. (theo.) in l/h at strokes/min (50 Hz) 72	92	117	134	156	173	Max. pressure bar
PS 600/	30	28.27	122.1	152.1	198.5	227.1	264.7	293.1	400
	36	40.27	175.8	219.0	285.8	327.0	381.2	422.1	353
	40	50.27	217.1	270.4	352.9	403.7	470.7	521.2	286
	50	78.54	339.2	422.5	551.4	630.9	735.5	814.4	183
	54	91.61	395.7	492.8	643.2	735.9	857.9	949.9	157
	65	132.73	573.3	714.1	932.0	1,066.2	1,243.0	1,376.3	108
	70	153.94	664.9	828.2	1,080.9	1,236.6	1,441.6	1,596.2	93
	80	201.06	868.5	1,081.7	1,411.8	1,615.1	1,882.9	2,084.9	71
	94	277.59	1,199.1	1,493.5	1,949.1	2,229.9	2,599.6	2,878.4	51
	125	490.87	2,120.4	2,641.0	3,446.8	3,943.3	4,596.9	5,090.1	29
	140	615.75	2,659.9	3,312.9	4,323.6	4,946.4	5,766.4	6,385.0	23
	160	804.25	3,474.1	4,327.1	5,647.2	6,460.7	7,531.7	8,339.7	18
	200	1,256.64	5,428.3	6,761.1	8,823.8	10,094.8	11,768.2	13,030.6	11

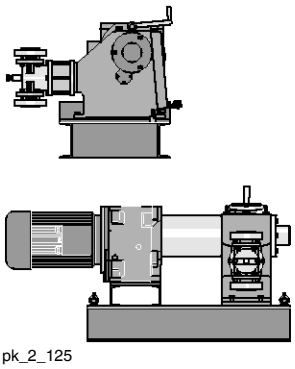

pk_2_125

Pump type	Plunger Ø mm	Stroke Volume cm³/stroke	Capacity max. (theo.) in l/h at strokes/min (50 Hz) 80	93	106	125	143	169	Max. pressure bar
PS 1400/	40	75.40	360.2	419.1	480.2	565.9	647.5	766.3	400
	50	117.81	562.8	654.9	750.3	884.3	1,011.7	1,197.3	275
	60	169.65	810.5	943.0	1,080.4	1,273.4	1,456.9	1,724.2	191
	70	230.91	1,103.1	1,283.6	1,470.6	1,733.3	1,983.1	2,346.8	140
	80	301.59	1,440.8	1,676.5	1,920.8	2,263.9	2,590.1	3,065.2	107
	94	416.39	1,989.3	2,314.7	2,651.9	3,125.0	3,576.0	4,231.9	77
	125	736.31	3,517.7	4,093.2	4,689.5	5,527.1	6,323.7	7,483.5	44
	140	923.63	4,412.7	5,134.5	5,882.5	6,933.1	7,932.4	9,387.3	35
	160	1,206.37	5,763.5	6,706.3	7,683.3	9,055.5	10,360.7	12,261.0	25
	200	1,884.96	9,005.5	10,478.6	12,005.2	14,149.3	16,188.6	19,157.8	17
	280	3,694.51	17,650.8	20,538.1	23,530.2	27,732.7	31,729.7	37,549.3	8

Note: All specified performance data is at motor frequency 50 Hz.

Other variants on request

3.14 Orlita® DR Plunger Metering Pumps

3.14.1 ORLITA® DR Valve-Free Plunger Metering Pump

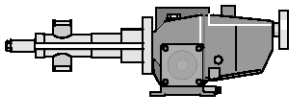

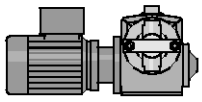

pk_2_081_1

Valve-free metering plunger head. The valve-free plunger liquid end functions by means of the oscillating and rotating plunger action. The suction and discharge sides are opened and closed by the plunger itself. The pump therefore needs no valves and can be operated over a wide stroke rate range.

This principle enables precise metering of highly viscous liquids which may contain even large solids.

The pump head is made of stainless steel. Plungers and cylinders are given a wear-resistant surface finish.

Depending on the application the pump head is also available in other high performance materials.

The clearance between the plunger and the cylinder, which is responsible for the seal, depends on the viscosity of the liquid.

The lantern on the rear head end can be used as a collector for leaked fluid or can be used to add flushing, lubrication or sealing agent. The lantern is sealed with elastomer sealing lips. The feed direction depends on the installation position of the plunger.

The backlash effect can be adjusted by turning the head around its longitudinal axis.

Pump type	Plunger Ø	Stroke Volume	Capacity max. (theo.) in l/h at strokes/min (50 Hz)			Max. pressure
	mm	cm³/stroke	58	77	116	bar
DR 15/	7	0.58	2.0	2.6	4.0	400.0
	12	1.70	5.9	7.8	11.8	159.0
	18	3.82	13.2	17.7	26.5	70.0
	25	7.36	25.6	34.1	51.2	36.0
	36	15.27	53.1	70.8	106.2	17.0
	50	29.45	102.4	136.6	204.9	9.0
	70	57.73	200.8	267.8	401.7	4.0

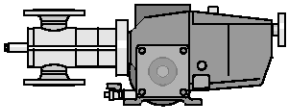

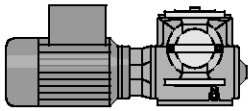

pk_2_119

Pump type	Plunger Ø	Stroke Volume	Capacity max. (theo.) in l/h at strokes/min (50 Hz)				Max. pressure
	mm	cm³/stroke	58	77	116	145	bar
DR 150/	12	3.62	12.5	16.7	25.1	31.4	400.0
	18	8.14	28.3	37.7	56.6	70.8	400.0
	25	15.71	54.6	72.8	109.3	136.6	250.0
	36	32.57	113.3	151.1	226.7	283.3	147.0
	50	62.83	218.6	291.5	437.3	546.6	76.0
	70	123.15	428.5	571.4	857.1	1,071.4	38.0
	90	203.58	708.4	944.5	1,416.8	1,771.1	23.0
	120	361.91	1,259.4	1,679.2	2,518.9	3,148.6	13.0
	140	492.60	1,714.2	2,285.6	3,428.5	4,285.6	9.0

Note: All performance specifications referred to 50 Hz motor frequency.

Other versions available on request.

3.15 Process Diaphragm Pump TriPower® MF

3.15.1 Process Diaphragm Pump TriPower® MF

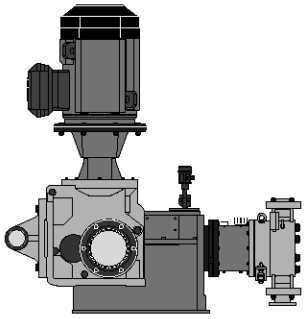

P_TR_0006_SW1

The process diaphragm pump TriPower® MF by ProMinent offers high performance with smallest footprint. The pump delivers up to 38 m^3/h at pressures of up to 415 bar. Thanks to the compact TriPower design, the pump has a considerably smaller footprint than conventionally designed pumps.

The proven Orlita® MF liquid head offers optimum safety with PTFE dual diaphragm system and integrated overflow valve.

Standard feed rate range: 4-38 m^3/h; 415-50 bar.

Triplex process diaphragm pumps

In Triplex metering pumps, the pressure stroke of the individual liquid ends is displaced by 120° crank angle. This ensures a low-pulsation rate of delivery even without the use of complex pulsation dampers. This process diaphragm pump design is the preferred design in the chemical and petrochemical industry.

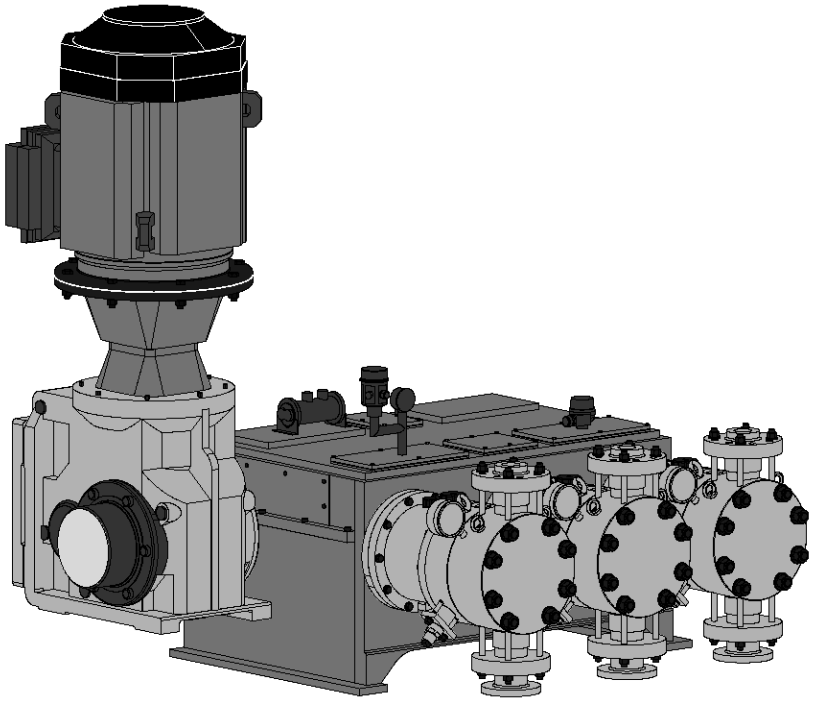

P_TR_0006_SW3

Technical data TriPower® size B/ 60 mm stroke / MF liquid ends

Plunger Ø	Stroke volume	Feed rate Q_{th} in l/h Triplex total at stroke rate n in 1/min					Max. pressure	Efficiency at		Standard type of valve
mm	cm^3/stroke	100	130	170	200	230	bar	100% pressure	50% pressure	
46	3 x 99.71	1,795	2,333	3,051	3,590	4,128	415	0.77	0.83	DN 32
55	3 x 142.55	2,566	3,336	4,362	5,132	5,902	320	0.81	0.85	DN 32
70	3 x 230.91	4,156	5,403	7,066	8,313	9,560	200	0.84	0.87	DN 40
90	3 x 381.70	6,871	8,932	11,680	13,741	15,802	125	0.90	0.90	DN 50
140	3 x 923.63	16,625	21,613	28,263	33,251	38,238	50	0.88	0.89	DN 80

3.16 Hydraulic/Mechanical Accessories

3.16.1 Return / pressure relief valve, spring-loaded

Spring-loaded valves, inline version, designed as pump valves, i.e. to cope with a very high number of load cycles. Also suitable for use without pulsation damper.

Features:

- Female thread on both sides or with sealing surface
- For bracing between 2 flanges
- PN 200 or PN 400
- Settings factory-set
- Standard design in stainless steel, hastelloy also available on request, as is Inconel

Also available heatable on request.

DN	Adjustable pressure	Construction	Order no.
6	2.0 bar	Ball	1020074
6	4.0 bar	Ball	1019224
6	8.0 – 9.0 bar	Ball	1019097
10	2.0 bar	Cone, fixed	1019649
10	3.0 – 6.0 bar	Cone, adjustable	1023053
10	8.0 – 14.0 bar	Cone, adjustable	1024065
16	2.0 bar	Cone, fixed	1017937
16	3.0 bar	Cone, fixed	1035266
16	4.5 – 5.4 bar	Cone, fixed	1017936
25	1.0 – 2.0 bar	Cone, fixed	1021843

3.16 Hydraulic/Mechanical Accessories

3.16.2 Safety valve

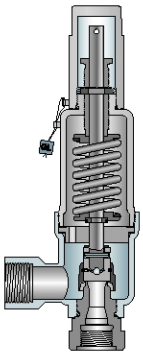

P_AC_0231_SW

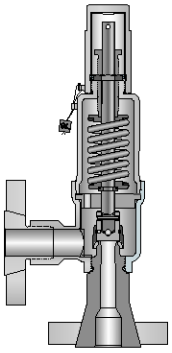

P_AC_0232_SW

Regulations:

Safety valves are designed to comply with the following regulations:

- Pressurised Vessel and Steam Boiler Directive
- TRD 421, 721
- TRB 403
- AD 2000 Bulletins A2 and A4
- DIN EN ISO 4126
- Pressure Equipment Directive 97/23/EC
- ASME Code, Sections II and VIII
- API 526, 520, 527
- Others

The relevant product-specific certificates are available to prove compliance with these regulations and thus also the safety of the products.

Safety valves carry a parts label (specification label) stipulating the following data:

- Order date (serial no.)
- Technical data
- Set pressure
- VdTÜV Parts test number
- CE mark with number of nominated centre
- Further data, e.g. UV stamp with ASME-approved safety valves

Inspection / Labelling:

Following adjustment and inspection, every safety valve is sealed by the manufacturer.

Connectors: NPT threaded connectors, threaded sockets, flange mountings comply with DIN / ANSI. Other connections are available on request.

Inlet body material	
Material description	X 14 CrNiMo 17-12-2
Material no.	1.4404
ASME	316L

Dimensions, pressure ranges, weights	**Standard 10 mm**
Pressure rating at inlet	320 PN
Pressure rating at outlet	160 PN
Min. response pressure	0.1 bar
Max. response pressure (4373 / 4374)	68 bar
Narrowest flow cross-section	78.5 mm^2
Narrowest flow diameter	10 mm
Leg length (outlet / inlet)	30 mm / 33 mm
Pin length (G 1/2 / G 3/4)	15 mm / 16 mm
Flange design	100 mm
Height (H2 / H4)	137/162 mm
Weight	1.2 kg

3.16.3 Pulsation Dampener

Pulsation dampers with separating membrane / bubble / bellows for providing separation between the gas cushion and metered chemical are used for low-pulsation metering as well as for reducing the flow resistance in long metering lines and with viscous media. The response pressure of the gas cushion should be approx. 60-80 % of the operating pressure.

Important: A pressure relief valve must always be fitted with an adjustable back pressure valve when using a pulsation damper.

3.16 Hydraulic/Mechanical Accessories

Accumulator

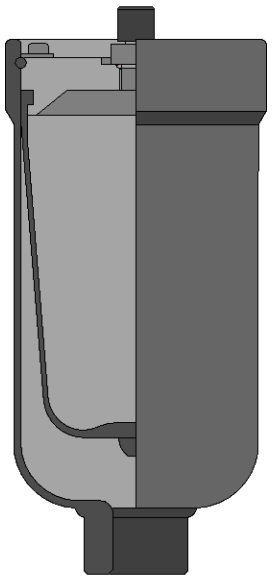

P_AC_0223_SW

Overview of the key product parameters (other versions are available)

Volumen	0.07 - 35 l
Pressure	200 – 20 bar
Diaphragm Material	FPM, EPDM, NBR
Housing material	AISI 316

The pulsation damper is selected by taking into account the specific type of pump, feed chemical and applicational parameters.

Pulsation damper

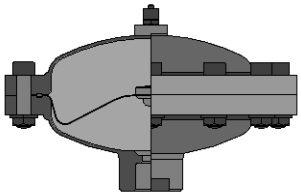

P_AC_0225_SW

Overview of the key product parameters (other versions are available)

Volumen	0.20 - 10 l
Pressure	200 – 20 bar
Diaphragm Material	PTFE (TFM 1600)
Housing material	AISI 316L

The pulsation damper is selected by taking into account the specific type of pump, feed chemical and applicational parameters.

Bellow tank

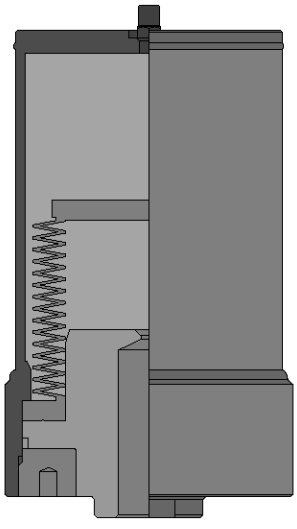

P_AC_0224_SW

Overview of the key product parameters (other versions are available)

Volumen	0.15 - 10 l
Pressure	160 – 29 bar
Diaphragm Material	PTFE
Housing material	AISI 316

The pulsation damper is selected by taking into account the specific type of pump, feed chemical and applicational parameters.

4 Dosing Systems

Contents Page

4.0 Overview Dosing Systems DULCODOS® And Ultromat® 1
4.0.1 Product Overview DULCODOS® 1
4.0.2 Product Overview Ultromat® 4
4.0.3 Selection Guide 6

4.1 Dosing Systems DULCODOS® eco 7
4.1.1 Dosing systems DULCODOS® eco 7
4.1.2 Identcode Ordering System, 35 litre 8
4.1.3 Identcode Ordering System, 60 litre 9
4.1.4 Identcode Ordering System, 100 litre 10
4.1.5 Identcode Ordering System, 140 litre 11
4.1.6 Identcode Ordering System, 250 litre 12
4.1.7 Identcode Ordering System, 500 litre 13
4.1.8 Identcode Ordering System, 1000 litre 14

4.2 Dosing Systems DULCODOS® panel 15
4.2.1 Dosing Systems DULCODOS® panel 15
4.2.2 Identcode Ordering System for Beta® and gamma/ L, DN 10 16
4.2.3 Identcode Ordering System for Sigma/ 1, DN 10 17
4.2.4 Identcode Ordering System for Sigma/ 1, DN 15 18
4.2.5 Identcode Ordering System for Sigma/ 2, DN 15 19
4.2.6 Identcode Ordering System for Sigma/ 2, DN 20 20
4.2.7 Identcode Ordering System for Sigma/ 3, DN 25 21
4.2.8 Identcode Ordering System for Sigma/ 3, DN 32 22

4.3 Hydrazin Dosing Systems DULCODOS® Hydrazin 23
4.3.1 Hydrazine Dosing Systems DULCODOS® Hydrazin 23

4.4 Liquid Enzyme Dosing Systems DULCODOS® PPLA 25
4.4.1 Liquid Enzyme Dosing Systems DULCODOS® PPLA 25

4.5 Swimming Pool Dosing Systems DULCODOS® Pool 27
4.5.1 Swimming Pool Dosing Systems DULCODOS® Pool 27
4.5.2 DULCODOS® Pool PR0 28
4.5.3 DULCODOS® Pool, PR2, PC2, PC4 30
4.5.4 DULCODOS® Pool PC5, PC6, PC7, PC8, PC9, PCA 32
4.5.5 DULCODOS® Pool, P02, PH1 34

4.6 Customized Dosing Systems DULCODOS® custom 37
4.6.1 Customized Dosing Systems DULCODOS® custom 37

4.7 Polymer Preparation and Dosing Systems Ultromat® 39
4.7.1 Ultromat® Systems 39
4.7.2 Ultromat® ULFa Continuous Flow Systems 40
4.7.3 Ultromat® ULPa Oscillating Systems 42
4.7.4 Ultromat® ULDa Double-Deck Systems 44
4.7.5 Ultromat® ATR Continuous Flow System (with round tanks) 46
4.7.6 Ultromat® AFK Continuous Flow System (only for liquid polyelectrolytes) 47
4.7.7 POLYMORE For Liquid Polyelectrolytes 48
4.7.8 PolyRex For Powdery And Liquid Polyelectrolytes 49
4.7.9 Ultromat® MT For Batch Operation 50
4.7.10 Ultromat® Accessories 51

4.8 Application Examples 54
4.8.1 Proportional Metering of Phosphate 54
4.8.2 Inhibitor Metering In Cooling Water 55
4.8.3 Inhibitor Metering In Boiler Feed Water 56
4.8.4 Swimming Pool: pH/Chlorine Metering 57
4.8.5 Sludge Dewatering 58

4.0 Overview Dosing Systems DULCODOS® And Ultromat®

4.0.1 Product Overview DULCODOS®

Dosing now made even easier. The pre-assembled, complete solutions from ProMinent are available immediately, ready for use for the most important applications. The sensor system, controller and dosing pump, together with the necessary tanks, make up a unit that can take on your task with no installation expenditure.

Compared to separate components, dosing systems offer three big advantages:

- Only one supplier and contact
- No interface problems between the separate components
- Customers do not need their own installation service. On request, the entire system is supplied pre-assembled and ready for use, or installed and commissioned on your site by our technicians.

As a customer, you get a ready-made solution which only needs electrical and hydraulic connections. We manufacture all our dosing systems in-house, which means that we make the main components used, such as dosing pump, controller and sensor system, and also assemble the systems here in our works. This guarantees ProMinent® quality.



pk_7_076

DULCODOS® eco

Net volume between 35 and 1000 litres.

Dosing stations with tank, drip pan, agitator, and metering pump for storing and metering of liquid chemicals. A selection system (Identcode) helps to easily, quickly and flexibly adapt the metering station to the metering task

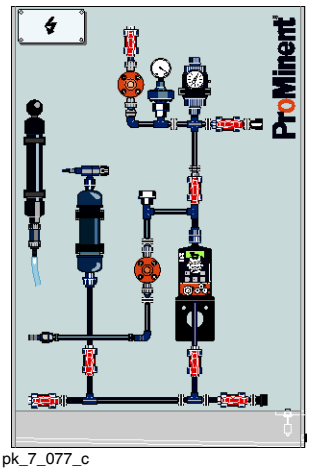

pk_7_077_c

DULCODOS® panel

Dosing feed rate between 0.74 - 1000 l/h

Dosing systems for liquid products consist of one or 2 metering pumps including wall-mounting panel and drip pan. A selection system (Identcode) helps to easily, quickly and flexibly adapt the dosing system to the metering task

4.0 Overview Dosing Systems DULCODOS® And Ultromat®

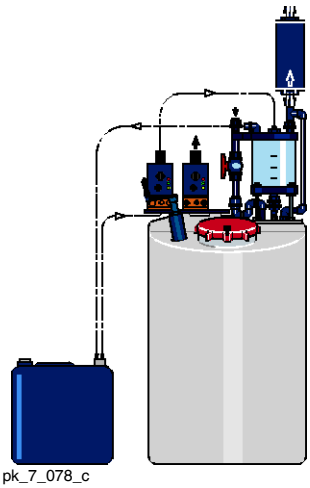

pk_7_078_c

DULCODOS® Hydrazin

Dosing feed rate up to 11 l/h

DULCODOS® Hydrazin is a dosing system for the preparation and dosing of hydrazine solution. Hydrazine is used as corrosion inhibitor in water and vapour systems. Because of the carcinogenic effect of hydrazine, special preparation and dosing units are required.

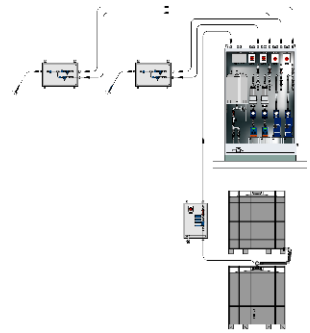

pk_7_079_c

DULCODOS® PPLA

With DULCODOS® PPLA units (Post Pelleting Liquid Application), liquid additives are sprayed on after pelletising of the animal food. The units have a modular design and offer a complete solution for storing, refilling, metering, and spraying on of all types of additives as e.g. vitamins and enzymes.

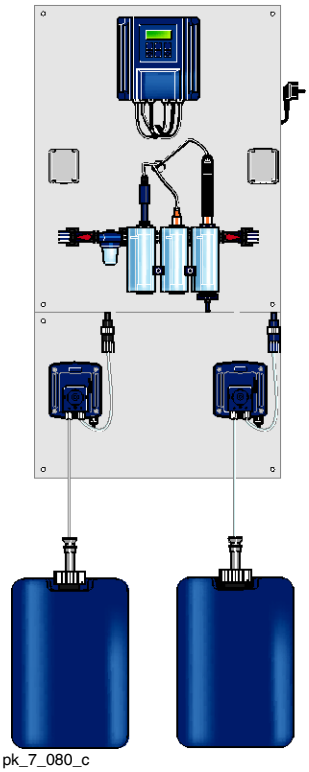

pk_7_080_c

DULCODOS® Pool

Applications: Private and public swimming pools

The dosing systems DULCODOS® Pool were designed especially for the conditioning of swimming pool water. Pre-mounted and ready for connection, the DULCODOS® Pool metering systems take care of the pH value adjustment and the disinfection – be it with chlorine or active oxygen.

A selection system (Identcode) helps to easily, quickly and flexibly adapt the dosing system to your dosing task.

4.0 Overview Dosing Systems DULCODOS® And Ultromat®

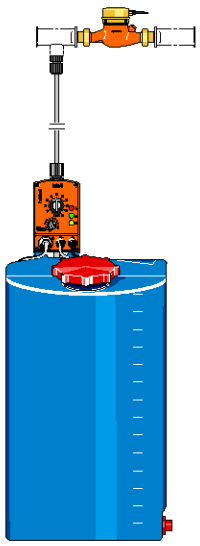

pk_7_081_c

DULCODOS® domestic

Dosing feed rate between 0.165 – 165 ml/m³

Dosing systems for a volume-proportional dosing of liquid chemicals in domestic water installations.

(DULCODOS® domestic Water Meter Controlled Dosing Plant see page → 9-4)

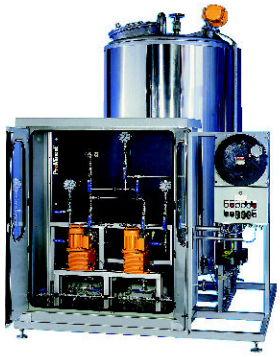

pk_7_082

DULCODOS® Custom

The customer-specific dosing systems DULCODOS® custom are individually designed, constructed and supplied according to customer preferences. Also according to ATEX (explosion-proof). You as our customer do not have to perform any installation work. If requested, we will also commission the systems at your site.

4.0 Overview Dosing Systems DULCODOS® And Ultromat®

4.0.2 Product Overview Ultromat®

Ultromat® systems are special preparation and metering stations for synthetic flocculants (polyelectrolytes).

Ultromat® ULFa Continuous Flow Systems

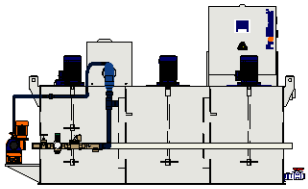

P_UL_0023_C1

Capacity range 400 – 8000 l/h, 0.5 % polymer solution

Ultromat® three-chamber continuous flow systems made of polypropylene for the processing of liquid and powdery polymers.

Ultromat® ULPa Oscillating Systems

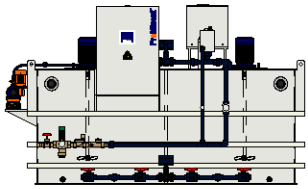

P_UL_0028_C1

Capacity range 400 – 4000 l/h, 0.5 % polymer solution

Ultromat® 2-chamber batch systems for the processing of liquid and powdery polymers. The Ultromat® consists of two separate tanks which are filled with polymer solution one after the other. Having matured, the polymer solution can be withdrawn.

Ultromat® ULDa Double-Deck Systems

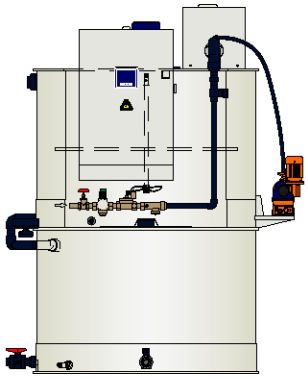

P_UL_0031_C1

Capacity range 400 – 2000 l/h, 0.5 % polymer solution

Ultromat® double deck systems for the processing of liquid and powdery polymers.

The double-deck Ultromat® consists of two separate PP tanks which are arranged on top of each other. The polymer solution is prepared in the top tank. Having matured, the polymer solution is refilled into the bottom tank.

Ultromat® ATR Continuous flow systems with round tank

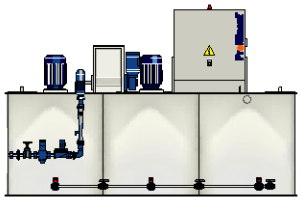

P_UL_0020_C

Capacity range 400 – 2000 l/h, 0.5 % polymer solution

Ultromat® continuous flow system with round tanks made of PP for the processing of powdery polymers. The tanks are hydraulically connected through overflow channels and are extraordinarily stable thanks to their round shape. This also significantly reduced the transport weight of the Ultromat® system.

4.0 Overview Dosing Systems DULCODOS® And Ultromat®

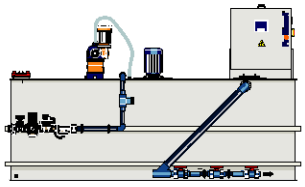

P_UL_0032_C1

Ultromat® AFK continuous flow systems

Capacity range 400 – 4000 l/h, 0.5 % polymer solution

Ultromat® 2-chamber continuous flow systems for the processing of liquid polymers. The tank consists of one separate day tank for the storage of the liquid concentrate and a 2-chamber continuous flow system for the preparation of the polymer solution. The liquid concentrate pump is included in the scope of delivery.

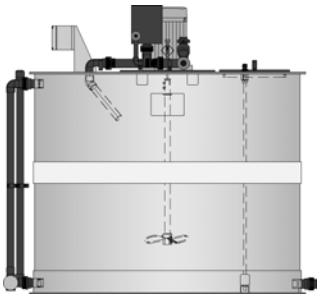

pk_7_088_c

Ultromat® MT manual mixing station

Capacity range 120 – 0.0 l/h, 0.5 % polymer solution

Ultromat® MT for processing polymers in liquid and powder form. During the preparation, the powdery polymer is added to the wetting cone to the diluent water.

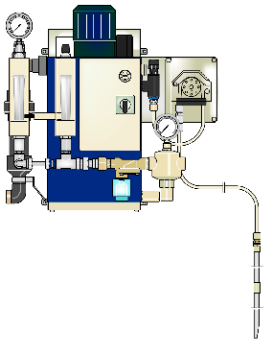

pk_7_089_c

POLYMORE

Capacity range 120 – 18000 l/h, 0.5 % polymer solution

Polymer preparation stations for liquid polymers. Water and polymer are mixed in a flame-proof multi-zone mixer unit. In most cases, the polymer solution can be directly metered into the application.

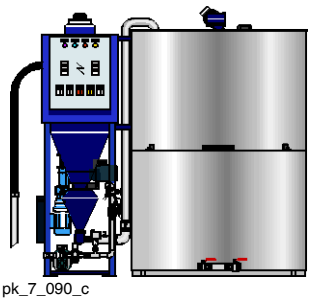

pk_7_090_c

PolyRex

Capacity range 0.0 – 0.0 l/h, 0.5 % polymer solution

PolyRex is a double-deck preparation station for the processing of liquid and powdery polymers. The preparation station consists of the delivery and mixer unit and the two stainless steel double-deck tanks. The upper tank is the preparation/maturing tank, the bottom tank is the storage tank for the prepared polymer solution.

4.0 Overview Dosing Systems DULCODOS® And Ultromat®

4.0.3 Selection Guide

Selection Guide DULCODOS®

Type	Function	Applications	Output range
DULCODOS® eco	Storing, Metering	General	35 – 1,000 litres
DULCODOS® panel	Metering	General	0.74 – 1,000 l/h
DULCODOS® Hydrazin	Preparing, Metering	Boiler feed water	up to 11 l/h
DULCODOS® PPLA	Mixing, Metering	Animal food	–
DULCODOS® Pool	Measuring, controlling, metering	Private and public swimming pools	–
DULCODOS® Domestic	Proportional metering	Drinking water	0.165 – 165 ml/m³
DULCODOS® custom	Customer-specific	any	–

Selection Guide Ultromat®

Type	Application	Polymers	Output range
Continuous Flow System Ultromat® ULFa	Waste water	F*/T**/TF***	400 – 8000 l/h
Oscillating System Ultromat® ULPa	Waste water, Paper	F*/T**/TF***	400 – 4000 l/h
Double-Deck System Ultromat® ULDa	Waste water, Paper	F*/T**/TF***	400 – 2000 l/h
Continuous flow system Ultromat® ATR with round tanks	Waste water	T**	400 – 2000 l/h
Continuous flow system Ultromat® AFK	Waste water	F*	400 – 4000 l/h
Manual mixing station Ultromat® MT	Waste water	T**	120 – 3800 l/h
POLYMORE	Waste water, Paper	F*	120 – 18,000 l/h

* liquid
** Powder
*** liquid + Powder

4.1 Dosing Systems DULCODOS® eco

4.1.1 Dosing systems DULCODOS® eco

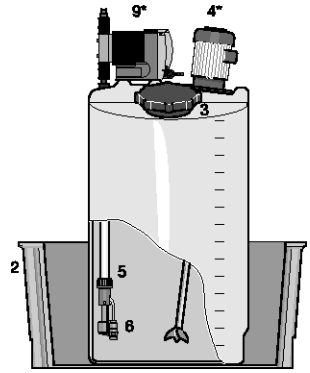

pk_3_033

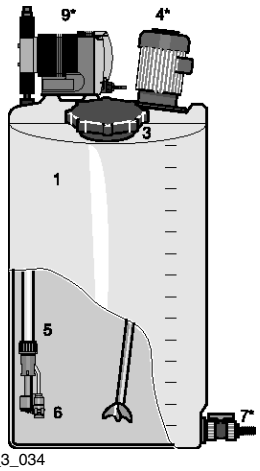

pk_3_034

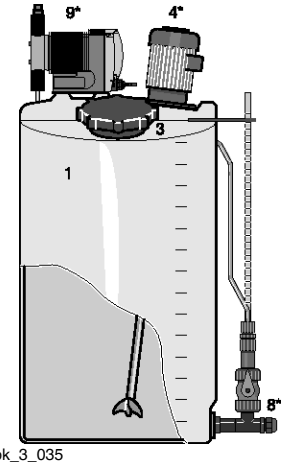

pk_3_035

ProMinent® dosing systems with PE tanks can be selected and ordered using the Identcode system.

Choose the metering pump first using the correct pump Identcode.

Component options:

1. PE metering tank (35 – 1000 litre)
2. Stackable collecting pan (35 – 1000 litre)
3. Lock for tank screw cap
4. Hand mixer / stirrer (*)
5. Suction assembly
6. Float switch for suction assembly
7. Discharge tap for tank (*)
8. Calibration assembly (*)
9. Metering pump (*) order separately
   (pump to be ordered separately based on the large number of possible pumps fitted to the tank. Use the Identcodes in section 1, 2 and 5 for the pumps you require).

* These components are designed for retrofitting, however to avoid damage in transit the goods are packed separately in the delivery. The complete installation on site is to be carried out by the customer.

The metering pump and tank combination options are shown in the table below:

Metering pumps	Tank 35 l	60 l	100 l	140 l	250 l	500 l	1000 l
alpha	x+	x+	x	x+	x	x+	x+
Beta®	x+	x	x	x	x	x	x
gamma/ L	x+	x	x	x	x	x	x
D_4a	x+	x	x	x	x	x	x
Sigma/ 1	–	x+	x+	x+	x	x	x
Sigma/ 2	–	–	–	–	x	x+	x
Sigma/ 3	–	–	–	–	x	x+	x
delta®	–	x+	x+	x+	x	x	x

x = pump mounted directly without mounting plate

x+ = pump mounted with mounting plate

4.1 Dosing Systems DULCODOS® eco

4.1.2 Identcode Ordering System, 35 litre

Dosing stations with tank, 35 litre

DSBa	PE tank											
	0035N	35 l PE dosing tank, neutral colour										
	0035S	35 l PE dosing tank, black										
	0035B	35 l PE dosing tank, blue										
	0035G	35 l PE dosing tank, yellow										
	0035R	35 l PE dosing tank, red										
		Collecting pan										
		0	without collecting pan									
		1	with collecting pan, neutral colour									
		2	with collecting pan, coloured (the same colour as tank									
			Version									
			0	with ProMinent® Logo								
				Lock for tank screw top								
				0	without lock							
					Hand mixer, stirrers							
					0	without						
					A	with PP hand mixer						
						Metering pump mounting						
						0	without pump					
						D	for alpha					
						E	for Beta®, gamma/ L, D_4a					
							Suction assembly selection					
							0	without suction assembly				
							1	suction assembly with 6x4 suction hose				
							2	suction assembly with 8x5 suction hose				
							3	suction assembly with 12x9 suction hose				
								Suction assembly material				
								1	PVC			
								2	PP			
									Suction assembly float switch			
									0	without float switch		
									1	2-stage, round plug, (6x4, 8x5, 12x9) for Beta®, gamma/ L		
									3	1-stage, flat plug (6x4, 8x5, 12x9) for D_4a		
										Accessories - discharge tap for tank		
										0	without accessories	
										1	with ball valve PVC, hose grommet d16 **	
										2	with ball valve PP, hose grommet d20 **	
											Calibration assembly	
											0	without calibration assembly
											1	with metering gauge d6 35/60 l ***
												Info - pump*
												e.g.: BT4a 1005 PPE 300AA000

* Please enter the Identcode of the selected pump

** Ball valve can only be selected if the metering station was ordered without drip pan.

*** Metering gauge can only be selected if the dosing station was ordered without drip pan and without suction fitting.

4.1 Dosing Systems DULCODOS® eco

4.1.3 Identcode Ordering System, 60 litre

Dosing stations with tank, 60 litre

DSBa	PE tank												
	0060N	60 l PE dosing tank, neutral colour											
	0060S	60 l PE dosing tank, black											
	0060B	60 l PE dosing tank, blue											
	0060G	60 l PE dosing tank, yellow											
	0060R	60 l PE dosing tank, red											
		Collecting pan											
		0	without collecting pan										
		1	with collecting pan, neutral colour										
		2	with collecting pan, coloured (the same colour as tank)										
			Version										
			0	with ProMinent® Logo									
				Lock for tank screw top									
				0	without lock								
				1	with lock								
					Hand mixer, stirrers								
					0	without							
					A	with PP hand mixer							
					B	with PP hand stirrer							
					H	with stainless steel 0.02 kW electric stirrer							
					P	with PVDF 0.02 kW electric stirrer							
						Metering pump mounting							
						0	without pump						
						A	for Beta®, gamma/ L, D_4a						
						D	for alpha						
						F	for Sigma/ 1						
						P	for delta®						
							Suction assembly selection						
							0	without suction assembly					
							1	suction assembly with 6x4 suction hose					
							2	suction assembly with 8x5 suction hose					
							3	suction assembly with 12x9 suction hose					
							4	suction assembly DN 10					
							5	suction assembly DN 15					
								Suction assembly material					
								1	PVC				
								2	PP				
									Suction assembly float switch				
									0	without float switch			
									1	2-stage, round plug, (6x4, 8x5, 12x9) for Beta®, gamma/ L, delta®			
									2	2-stage, round plug, (DN 10-32) for Sigma/ 1/ 2/ 3, delta®			
									3	1-stage, flat plug, (6x4, 8x5, 12x9) for D_4a			
										Accessories - discharge tap for tank			
										0	without accessories		
										1	with ball valve PVC, hose grommet d16 **		
										2	with ball valve PP, hose grommet d20 **		
											Calibration assembly		
											0	without calibration assembly	
											1	with calibration assembly d6 35/60 l	
											2	with metering gauge d8 60 l ***	
												Info - pump*	
													e.g.: BT4a 1005 PPE 300AA000

* Please enter the Identcode of the selected pump

** Ball valve can only be selected if the metering station was ordered without drip pan.

*** Metering gauge can only be selected if the dosing station was ordered without drip pan and without suction fitting.

4.1 Dosing Systems DULCODOS® eco

4.1.4 Identcode Ordering System, 100 litre

Dosing stations with tank, 100 litre

DSBa	PE tank												
	0100N	100 l PE dosing tank, neutral colour											
	0100S	100 l PE dosing tank, black											
	0100B	100 l PE dosing tank, blue											
	0100G	100 l PE dosing tank, yellow											
	0100R	100 l PE dosing tank, red											
		Collecting pan											
		0	without collecting pan										
		1	with collecting pan, neutral colour										
		2	with collecting pan, coloured (the same colour as tank)										
			Version										
			0	with ProMinent® Logo									
				Lock for tank screw top									
				0	without lock								
				1	with lock								
					Hand mixer, stirrers								
					0	without							
					A	with PP hand mixer							
					C	with PP hand stirrer							
					I	with stainless steel 0.18 kW electric stirrer							
					R	with PVDF 0.18 kW electric stirrer							
						Metering pump mounting							
						0	without pump						
						A	for Beta®, gamma/ L, D_4a						
						L	for Sigma/ 1						
						N	for alpha						
						P	for delta®						
							Suction assembly selection						
							0	without suction assembly					
							1	suction assembly with 6x4 suction hose					
							2	suction assembly with 8x5 suction hose					
							3	suction assembly with 12x9 suction hose					
							4	suction assembly DN 10					
							5	suction assembly DN 15					
								Suction assembly material					
								1	PVC				
								2	PP				
									Suction assembly float switch				
									0	without float switch			
									1	2-stage, round plug, (6x4, 8x5, 12x9) for Beta®, gamma/ L, delta®			
									2	2-stage, round plug, (DN 10-32) for Sigma/ 1/ 2/ 3, delta®			
									3	1-stage, flat plug, (6x4, 8x5, 12x9) for D_4a			
										Accessories - discharge tap for tank			
										0	without accessories		
										1	with ball valve PVC, hose grommet d16 **		
										2	with ball valve PP, hose grommet d20 **		
											Calibration assembly		
											0	without calibration assembly	
											3	with metering gauge d8 100/140 l ***	
												Info - pump*	
													e.g.: BT4a 1005 PPE 300AA000

* Please enter the Identcode of the selected pump

** Ball valve can only be selected if the metering station was ordered without drip pan.

*** Metering gauge can only be selected if the dosing station was ordered without drip pan and without suction fitting.

4.1.5 Identcode Ordering System, 140 litre

Dosing stations with tank, 140 litre

DSBa	PE tank												
	0140N	140 l PE dosing tank, neutral colour											
	0140S	140 l PE dosing tank, black											
	0140B	140 l PE dosing tank, blue											
	0140G	140 l PE dosing tank, yellow											
	0140R	140 l PE dosing tank, red											
		Collecting pan											
		0	without collecting pan										
		1	with collecting pan, neutral colour										
		2	with collecting pan, coloured (the same colour as tank)										
			Version										
			0	with ProMinent® Logo									
				Lock for tank screw top									
				0	without lock								
				1	with lock								
					Hand mixer, stirrers								
					0	without							
					A	with PP hand mixer							
					D	with PP hand stirrer							
					K	with stainless steel 0.18 kW electric stirrer							
					S	with PVDF 0.18 kW electric stirrer							
						Metering pump mounting							
						0	without pump						
						A	for Beta®, gamma/ L, D_4a						
						D	for alpha						
						H	for Sigma/ 1						
						P	for delta®						
							Suction assembly selection						
							0	without suction assembly					
							1	suction assembly with 6x4 suction hose					
							2	suction assembly with 8x5 suction hose					
							3	suction assembly with 12x9 suction hose					
							4	suction assembly DN 10					
							5	suction assembly DN 15					
								Suction assembly material					
								1	PVC				
								2	PP				
									Suction assembly float switch				
									0	without float switch			
									1	2-stage, round plug (6x4, 8x5, 12x9) for Beta®, gamma/ L, delta®			
									2	2-stage, round plug, (DN 10-32) for Sigma/ 1/ 2/ 3, delta®			
									3	1-stage, flat plug, (6x4, 8x5, 12x9) for D_4a			
										Accessories - discharge tap for tank			
										0	without accessories		
										1	with ball valve PVC, hose grommet d16 **		
										2	with ball valve PP, hose grommet d20 **		
											Calibration assembly		
											0	without calibration assembly	
											3	with metering gauge d8 100/140 l ***	
												Info - pump*	
													e.g.: BT4a 1005 PPE 300AA000

* Please enter the Identcode of the selected pump

** Ball valve can only be selected if the metering station was ordered without drip pan.

*** Metering gauge can only be selected if the dosing station was ordered without drip pan and without suction fitting.

4.1 Dosing Systems DULCODOS® eco

4.1.6 Identcode Ordering System, 250 litre

Dosing stations with tank, 250 litre

DSBa	PE tank												
	0250N	250 l PE dosing tank, neutral colour											
	0250S	250 l PE dosing tank, black											
	0250B	250 l PE dosing tank, blue											
	0250G	250 l PE dosing tank, yellow											
	0250R	250 l PE dosing tank, red											
		Collecting pan											
		0	without collecting pan										
		1	with collecting pan, neutral colour										
		2	with collecting pan, coloured (the same colour as tank)										
			Version										
			0	with ProMinent® Logo									
				Lock for tank screw top									
				0	without lock								
				1	with lock								
					Hand mixer, stirrers								
					0	without							
					A	with PP hand mixer							
					E	with PP hand stirrer							
					L	with stainless steel 0.18 kW electric stirrer							
					T	with electric stirrer PVDF 0.18 kW							
						Metering pump mounting							
						0	without pump						
						A	for Beta®, gamma/ L, D_4a						
						B	for Sigma/ 2/ 3						
						C	for Sigma/ 1						
						N	for alpha						
						P	for delta®						
							Suction assembly selection						
							0	without suction assembly					
							1	suction assembly with 6x4 suction hose					
							2	suction assembly with 8x5 suction hose					
							3	suction assembly with 12x9 suction hose					
							4	suction assembly DN 10					
							5	suction assembly DN 15					
							6	suction assembly DN 20					
							7	suction assembly DN 25					
							8	suction assembly DN 32					
								Suction assembly material					
								1	PVC				
								2	PP				
									Suction assembly float switch				
									0	without float switch			
									1	2-stage, round plug, (6x4, 8x5, 12x9) for Beta®, gamma/ L, delta®			
									2	2-stage, round plug, (DN 10-32) for Sigma/ 1/ 2/ 3, delta®			
									3	1-stage, flat plug, (6x4, 8x5, 12x9) for D_4a			
										Accessories - discharge tap for tank			
										0	without accessories		
										1	with ball valve PVC, hose grommet d16 **		
										2	with ball valve PP, hose grommet d20 **		
											Calibration assembly		
											0	without calibration assembly	
											4	with metering gauge d12 250 l ***	
												Info - pump*	
													e.g.: BT4a 1005 PPE 300AA000

* Please enter the Identcode of the selected pump

** Ball valve can only be selected if the metering station was ordered without drip pan.

*** Metering gauge can only be selected if the dosing station was ordered without drip pan and without suction fitting.

4.1 Dosing Systems DULCODOS® eco

4.1.7 Identcode Ordering System, 500 litre

Dosing stations with tank, 500 litre

DSBa	PE tank												
	0500N	500 l PE dosing tank, neutral colour											
	0500S	500 l PE dosing tank, black											
	0500B	500 l PE dosing tank, blue											
	0500G	500 l PE dosing tank, yellow											
	0500R	500 l PE dosing tank, red											
		Collecting pan											
		0	without collecting pan										
		1	with collecting pan, neutral colour										
		2	with collecting pan, coloured (the same colour as tank)										
			Version										
			0	with ProMinent® Logo									
				Lock for tank screw top									
				0	without lock								
				1	with lock								
					Hand mixer, stirrers								
					0	without							
					A	with PP hand mixer							
					F	with PP hand stirrer							
					M	with stainless steel 0.25 kW electric stirrer							
					U	with PVDF 0.25 kW electric stirrer							
						Metering pump mounting							
						0	without pump						
						A	for Beta®, gamma/ L, D_4a						
						C	for Sigma/ 1, delta®						
						D	for alpha						
						J	for Sigma/ 2/ 3						
						P	for delta®						
							Suction assembly selection						
							0	without suction assembly					
							1	suction assembly with 6x4 suction hose					
							2	suction assembly with 8x5 suction hose					
							3	suction assembly with 12x9 suction hose					
							4	suction assembly DN 10					
							5	suction assembly DN 15					
							6	suction assembly DN 20					
							7	suction assembly DN 25					
							8	suction assembly DN 32					
								Suction assembly material					
								1	PVC				
								2	PP				
									Suction assembly float switch				
									0	without float switch			
									1	2-stage, round plug, (6x4, 8x5, 12x9) for Beta®, gamma/ L, delta®			
									2	2-stage, round plug, (DN 10-32) for Sigma/ 1/ 2/ 3, delta®			
									3	1-stage, flat plug, (6x4, 8x5, 12x9) for D_4a			
										Accessories - discharge tap for tank			
										0	without accessories		
										1	with ball valve PVC, hose grommet d16 **		
										2	with ball valve PP, hose grommet d20 **		
											Calibration assembly		
											0	without calibration assembly	
											5	with metering gauge d12 500/1,000 l ***	
												Info - pump*	
													e.g.: BT4a 1005 PPE 300AA000

* Please enter the Identcode of the selected pump

** Ball valve can only be selected if the metering station was ordered without drip pan.

*** Metering gauge can only be selected if the dosing station was ordered without drip pan and without suction fitting.

4.1 Dosing Systems DULCODOS® eco

4.1.8 Identcode Ordering System, 1000 litre

Dosing stations with tank, 1000 litre

DSBa	PE tank												
	1000N	1000 l PE dosing tank, neutral colour											
	1000S	1000 l PE dosing tank, black											
	1000B	1000 l PE dosing tank, blue											
	1000G	1000 l PE dosing tank, yellow											
	1000R	1000 l PE dosing tank, red											
		Collecting pan											
		0	without collecting pan										
		1	with collecting pan, neutral colour										
		2	with collecting pan, black										
			Version										
			0	with ProMinent® Logo									
				Lock for tank screw top									
				0	without lock								
				1	with lock								
					Hand mixer, stirrers								
					0	without							
					G	with hand mixer PP							
					N	with stainless steel 0.75 kW electric stirrer							
					W	with PVDF 0.75 kW electric stirrer							
						Metering pump mounting							
						0	without pump						
						A	for Beta®, gamma/ L, D_4a						
						B	for Sigma/ 2/ 3						
						C	for Sigma/ 1, delta®						
						D	for alpha						
						P	for delta®						
							Suction assembly selection						
							0	without suction assembly					
							1	suction assembly with 6x4 suction hose					
							2	suction assembly with 8x5 suction hose					
							3	suction assembly with 12x9 suction hose					
							4	suction assembly DN 10					
							5	suction assembly DN 15					
							6	suction assembly DN 20					
							7	suction assembly DN 25					
							8	suction assembly DN 32					
								Suction assembly material					
								1	PVC				
								2	PP				
									Suction assembly float switch				
									0	without float switch			
									1	2-stage, round plug, (6x4, 8x5, 12x9) for Beta®, gamma/ L, delta®			
									2	2-stage, round plug, (DN 10-32) for Sigma/ 1/ 2/ 3, delta®			
									3	1-stage, flat plug, (6x4, 8x5, 12x9) for D_4a			
										Accessories - discharge tap for tank			
										0	without accessories		
										1	with ball valve PVC, hose grommet d16 **		
										2	with ball valve PP, hose grommet d20 **		
											Calibration assembly		
											0	without calibration assembly	
											5	with metering gauge d12 500/1,000 l ***	
												Info - pump*	
													e.g.: BT4a 1005 PPE 300AA000

* Please enter the Identcode of the selected pump

** Ball valve can only be selected if the metering station was ordered without drip pan.

*** Metering gauge can only be selected if the dosing station was ordered without drip pan and without suction fitting.

4.2 Dosing Systems DULCODOS® panel

4.2.1 Dosing Systems DULCODOS® panel

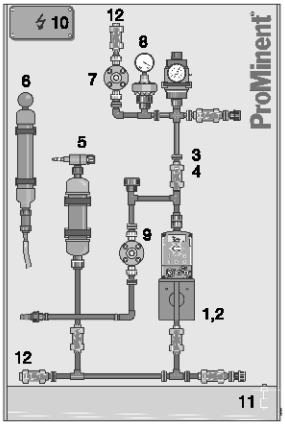

pk_7_070
Dosing system with simple pump

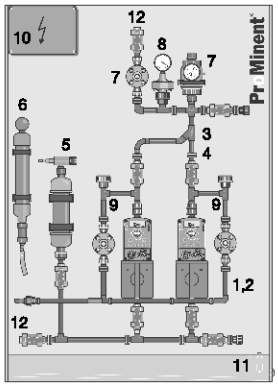

pk_7_061
Dosing system with stand-by pump

ProMinent® panel-mounted dosing systems offer a solution for the most common dosing tasks as e.g.:

- Dosing of biocides and inhibitors in cooling water
- Dosing of alkalis and acids for pH value adjustment
- Dosing of precipitants (ferric chloride) for waste water treatment
- Dosing of detergents (CIP systems, bottle washing machines)

The panel-mounted dosing systems can be selected and ordered using an Identcode system.

At first, the dosing and standby pump have to be selected and ordered via the separate pump Identcode.

The followings options can be selected:

1. Mounting frame with piping for installation of one metering pump
2. Extension for installation of a standby pump (same type as metering pump)
3. Pipework material
4. Sealing material
5. Vacuum cylinder
6. Vacuum pump
7. Pulsation damper
8. Manometer
9. Relief valve assembly
10. Terminal box
11. Leakage sensor
12. Connections for suction and pressure side

Technical Data

Type		B410	B510	GL10	S110	S115	S215	S220	S325	S332
Nominal width piping		DN 10	DN 10	DN 10	DN 10	DN 15	DN 15	DN 20	DN 25	DN 32
Nominal width flushing port		DN 10	DN 10	DN 10	DN 10	DN 10	DN 10	DN 15	DN 20	DN 25
Connection return line		DN 10	DN 10	DN 10	DN 10	DN 10	DN 10	DN 15	DN 20	DN 25
Dimensions H x W x D	mm	1,200 x 800 x 300	1,200 x 800 x 300	1,200 x 800 x 300	1,400 x 900 x 450	1,400 x 900 x 450	1,400 x 900 x 450	1,400 x 900 x 450	1,600 x 900 x 500	1,600 x 900 x 500
Dimensions H x W x D with 2 pumps	mm	1,400 x 1,000 x 300	1,400 x 1,000 x 300	1,400 x 1,000 x 300	1,600 x 1,200 x 450	1,600 x 1,200 x 450	1,600 x 1,200 x 450	1,600 x 1,200 x 450	1,600 x 1,200 x 500	1,600 x 1,200 x 500
Capacity max.	l/h	19	32	32	65	120	130	350	324	1,000
Operating pressure max. (25 °C)	bar	10	10	10	10	10	10	10	10	8* / 10
Operating pressure max. (40 °C)	bar	6	6	6	6	6	6	6	6	6

* with option pulsation damper

4.2 Dosing Systems DULCODOS® panel

4.2.2 Identcode Ordering System for Beta® and gamma/ L, DN 10

Panel-mounted dosing systems for Beta, gamma/ L, DN 10

DSWa	**Mounting frame with pipework for installation of one dosing pump (order dosing pump separately)**													
	B410	for Beta®, DN 10 (BT4a 1000 - 0220: 0.74 - 19 l/h)												
	B510	for Beta®, DN 10 (BT5a 1605 - 0232: 4.1 - 32 l/h)												
	GL10	for gamma/ L, DN 10 (GALa 1000 - 0232: 0.74 - 32 l/h)												
		Extension for installation of a standby pump (order standby pump separately)												
		0	without											
		1	with extension for standby pump (same type as dosing pump)											
			Pipework material											
			PC	PVC										
			PP	PP										
				Sealing material										
				E	EPDM									
				A	FPM									
					Vacuum cylinder									
					0	without								
					1	with vacuum cylinder								
						Vacuum pump								
						0	without							
						1	with vacuum pump							
							Pulsation damper							
							0	without						
							1	with pulsation damper (incl. back pressure valve)						
								Pressure gauge						
								0	without					
								1	with pressure gauge and diaphragm seal unit					
									Relief valve assembly					
									0	with multi-function valve (for 1 pump of Type: 1000 - 1605)				
									1	with multi-function valve (for 1 pump of Type: 0708 - 0232)				
									2	with back pressure valve (for 1 pump)				
									3	with multi-function valve (for 2 pumps of Type: 1000 - 1605)				
									4	with multi-function valve (for 2 pumps of Type: 0708 - 0232)				
									5	with back pressure valves (for 2 pumps)				
										Terminal box				
										0	without terminal box			
										1	with terminal box for 1 pump			
										2	with terminal box for 2 pumps			
										3	with terminal box + master switch for 1 pump			
										4	with terminal box + 2 master switches for 2 pumps			
											Leakage sensor in drip tray			
											0	without leakage sensor		
											1	with leakage sensor		
												Suction/delivery side connection parts		
												0	with solvent/fusion weld sockets	
												1	with 6x4 hose barb	
												2	with 8x5 hose barb	
												3	with 12x6 hose barb	
												4	with 12x9 hose barb	
												5	with DN 10 hose barb	
													Info - pump*	
														e.g.: BT4a 1005 PPE 300AA000

* Please enter the Identcode for your chosen pump

4.2 Dosing Systems DULCODOS® panel

4.2.3 Identcode Ordering System for Sigma/ 1, DN 10

Panel-mounted dosing systems for Sigma/ 1, DN 10

DSWa	**Mounting frame with pipework for installation of one dosing pump (order dosing pump separately)**												
	S110	Sigma/ 1, DN 10 (S1Ca/S1Ba 12017 - 07065: 20 - 65 l/h)											
		Extension for installation of a standby pump (order standby pump separately)											
		0	without										
		2	with extension for standby pump (same type as dosing pump)										
			Pipework material										
			PC	PVC									
			PP	PP									
				Sealing material									
				E	EPDM								
				A	FPM								
					Vacuum cylinder								
					0	without							
					2	with vacuum cylinder							
						Vacuum pump							
						0	without						
						1	with vacuum pump						
							Pulsation damper						
							0	without					
							2	with pulsation damper (incl. back pressure valve)					
								Pressure gauge					
								0	without				
								1	with pressure gauge and diaphragm seal unit				
									Relief valve assembly				
									6	with relief valve assembly			
										Terminal box			
										0	without terminal box		
										1	with terminal box for 1 pump		
										2	with terminal box for 2 pumps		
										3	with terminal box + master switch for 1 pump		
										4	with terminal box + 2 master switches for 2 pumps		
											Leakage sensor in drip tray		
											0	without leakage sensor	
											1	with leakage sensor	
												Suction/delivery side connection parts	
												0	with straight solvent/fusion sockets
												6	with hose DN 10 connector
													Info - pump*
													e.g.: S1Ba H12017 PVT0110M000

* Please enter the Identcode for your chosen pump

4.2 Dosing Systems DULCODOS® panel

4.2.4 Identcode Ordering System for Sigma/ 1, DN 15

Panel-mounted dosing systems for Sigma/ 1, DN 15

DSWa	**Mounting frame with pipework for installation of one dosing pump (order dosing pump separately)**												
	S115	Sigma/ 1, DN 15 (S1Ca/S1Ba 07042 - 04120: 50 - 120 l/h)											
		Extension for installation of a standby pump (order standby pump separately)											
		0	without										
		3	with extension for standby pump (same type as dosing pump)										
			Pipework material										
			PC	PVC									
			PP	PP									
				Sealing material									
				E	EPDM								
				A	FPM								
					Vacuum cylinder								
					0	without							
					3	with vacuum cylinder							
						Vacuum pump							
						0	without						
						1	with vacuum pump						
							Pulsation damper						
							0	without					
							3	with pulsation damper (incl. back pressure valve)					
								Pressure gauge					
								0	without				
								1	with pressure gauge and diaphragm seal unit				
									Relief valve assembly				
									6	with relief valve assembly			
										Terminal box			
										0	without terminal box		
										1	with terminal box for 1 pump		
										2	with terminal box for 2 pumps		
										3	with terminal box + master switch for 1 pump		
										4	with terminal box + 2 master switches for 2 pumps		
											Leakage sensor in drip tray		
											0	without leakage sensor	
											1	with leakage sensor	
												Suction/delivery side connection parts	
												0	with straight solvent/fusion sockets
												7	with hose DN 15 connector
													Info - pump*
													e.g.: S1Ba H07042 PVT0110M000

* Please enter the Identcode for your chosen pump

4.2 Dosing Systems DULCODOS® panel

4.2.5 Identcode Ordering System for Sigma/ 2, DN 15

Panel-mounted dosing systems for Sigma/ 2, DN 15

DSWa	**Mounting frame with pipework for installation of one dosing pump (order dosing pump separately)**												
	S215	Sigma/ 2, DN 15 (S2Ca/S2Ba 16050 - 16130: 60 - 130 l/h)											
		Extension for installation of a standby pump (order standby pump separately)											
		0	without										
		4	with extension for standby pump (same type as dosing pump)										
			Pipework material										
			PC	PVC									
			PP	PP									
				Sealing material									
				E	EPDM								
				A	FPM								
					Vacuum cylinder								
					0	without							
					4	with vacuum cylinder							
						Vacuum pump							
						0	without						
						1	with vacuum pump						
							Pulsation damper						
							0	without					
							4	with pulsation damper (incl. back pressure valve)					
								Pressure gauge					
								0	without				
								1	with pressure gauge and diaphragm seal unit				
									Relief valve assembly				
									6	with relief valve assembly			
										Terminal box			
										0	without terminal box		
										1	with terminal box for 1 pump		
										2	with terminal box for 2 pumps		
										3	with terminal box + master switch for 1 pump		
										4	with terminal box + 2 master switches for 2 pumps		
											Leakage sensor in drip tray		
											0	without leakage sensor	
											1	with leakage sensor	
												Suction/delivery side connection parts	
												0	with straight solvent/fusion sockets
												8	with hose DN 15 connector
													Info - pump*
													e.g.: S2Ba HM16050 PVT0110M000

* Please enter the Identcode for your chosen pump

4.2 Dosing Systems DULCODOS® panel

4.2.6 Identcode Ordering System for Sigma/ 2, DN 20

Panel-mounted dosing systems for Sigma/ 2, DN 20

DSWa	**Mounting frame with pipework for installation of one dosing pump (order dosing pump separately)**												
	S220	Sigma/ 2, DN 20 (S2Ca/S2Ba 07120 - 04350: 120 - 350 l/h)											
		Extension for installation of a standby pump (order standby pump separately)											
		0	without										
		5	with extension for standby pump (same type as dosing pump)										
			Pipework material										
			PC	PVC									
			PP	PP									
				Sealing material									
				E	EPDM								
				A	FPM								
					Vacuum cylinder								
					0	without							
					5	with vacuum cylinder							
						Vacuum pump							
						0	without						
						1	with vacuum pump						
							Pulsation damper						
							0	without					
							5	with pulsation damper (incl. back pressure valve)					
								Pressure gauge					
								0	without				
								1	with pressure gauge and diaphragm seal unit				
									Relief valve assembly				
									6	with relief valve assembly			
										Terminal box			
										0	without terminal box		
										1	with terminal box for 1 pump		
										2	with terminal box for 2 pumps		
										3	with terminal box + master switch for 1 pump		
										4	with terminal box + 2 master switches for 2 pumps		
											Leakage sensor in drip tray		
											0	without leakage sensor	
											1	with leakage sensor	
												Suction/delivery side connection parts	
												0	with straight solvent/fusion sockets
												9	with hose DN 20 connector
													Info - pump*
													e.g.: S2Ba HM07120 PVT0110M000

* Please enter the Identcode for your chosen pump

4.2 Dosing Systems DULCODOS® panel

4.2.7 Identcode Ordering System for Sigma/ 3, DN 25

Panel-mounted dosing systems for Sigma/ 3, DN 25

DSWa	**Mounting frame with pipework for installation of one dosing pump (order dosing pump separately)**												
	S325	Sigma/ 3, DN 25 (S3Ca/S3Cb 120145 - 120330: 174 - 324 l/h)											
		Extension for installation of a standby pump (order standby pump separately)											
		0	wihtout										
		6	with extension for standby pump (same type as dosing pump)										
			Pipework material										
			PC	PVC									
			PP	PP									
				Sealing material									
				E	EPDM								
				A	FPM								
					Vacuum cylinder								
					0	without							
					6	with vacuum cylinder							
						Vacuum pump							
						0	without						
						1	with vacuum pump						
							Pulsation damper						
							0	without					
							6	with pulsation damper (incl. back pressure valve)					
								Pressure gauge					
								0	without				
								1	with pressure gauge and diaphragm seal unit				
									Relief valve assembly				
									6	with relief valve assembly			
										Terminal box			
										0	without terminal box		
										1	with terminal box for 1 pump		
										2	with terminal box for 2 pumps		
										3	with terminal box + master switch for 1 pump		
										4	with terminal box + 2 master switches for 2 pumps		
											Leakage sensor in drip tray		
											0	without leakage sensor	
											1	with leakage sensor	
												Suction/delivery side connection parts	
												0	with straight solvent/fusion sockets
												A	with hose connector DN 25
													Info - pump*
													e.g.: S3Ba H120145 PVT0110M000

* Please enter the Identcode for your chosen pump

4.2 Dosing Systems DULCODOS® panel

4.2.8 Identcode Ordering System for Sigma/ 3, DN 32

Panel-mounted dosing systems for Sigma/ 3, DN 32

DSWa	**Mounting frame with pipework for installation of one dosing pump (order dosing pump separately)**												
	S332	Sigma/ 3, DN 32 (S3Ca/S3Cb 070410 - 041030: 492 - 1000 l/h)											
		Extension for installation of a standby pump (order standby pump separately)											
		0	without										
		7	with extension for standby pump (same type as dosing pump)										
			Pipework material										
			PC	PVC									
			PP	PP									
				Sealing material									
				E	EPDM								
				A	FPM								
					Vacuum cylinder								
					0	without							
					7	with vacuum cylinder							
						Vacuum pump							
						0	without						
						1	with vacuum pump						
							Pulsation damper						
							0	without					
							7	with pulsation damper (incl. back pressure valve)					
								Pressure gauge					
								0	without				
								1	with pressure gauge and diaphragm seal unit				
									Relief valve assembly				
									6	with relief valve assembly			
										Terminal box			
										0	without terminal box		
										1	with terminal box for 1 pump		
										2	with terminal box for 2 pumps		
										3	with terminal box + master switch for 1 pump		
										4	with terminal box + 2 master switches for 2 pumps		
											Leakage sensor in drip tray		
											0	without leakage sensor	
											1	with leakage sensor	
												Suction/delivery side connection parts	
												0	with straight solvent/fusion sockets
												B	with hose DN 32 connector
													Info - pump*
													e.g.: S3Ba H070410 PVT0110M000

* Please enter the Identcode for your chosen pump

4.3 Hydrazin Dosing Systems DULCODOS® Hydrazin

4.3.1 Hydrazine Dosing Systems DULCODOS® Hydrazin

Hydrazine is an oxygen binding agent used in service water applications, primarily in steam generating systems. It is a carcinogenic substance that requires particular care and attention when handling.

It can be assumed that the triggering threshold of hydrazine is not exceeded in sealed and gas-tight systems used for their intended purpose.

Design:

Turnkey pre-assembled dosing system consisting of:

- Gas tight PE dosing tank with litre scale, locking screw cap and manual stirrer.
- Each with decanting and dosing pump with suction assembly, level switch and all pipework in rigid PVC, complete with two ball valves, dosing tank and activated charcoal filter.

Accessories:

5 m discharge line Ø 8/12 mm and 8 mm Ø/1/20 stainless steel injection valve

230 V ±10 %, 50...60 Hz electrical connector.

Note:

The system is supplied with hose connectors which fit widely available commercial drainage tap systems. Manufacturers of these systems include e.g. Fa. MicroMatic, Gräfelfing/Munich.

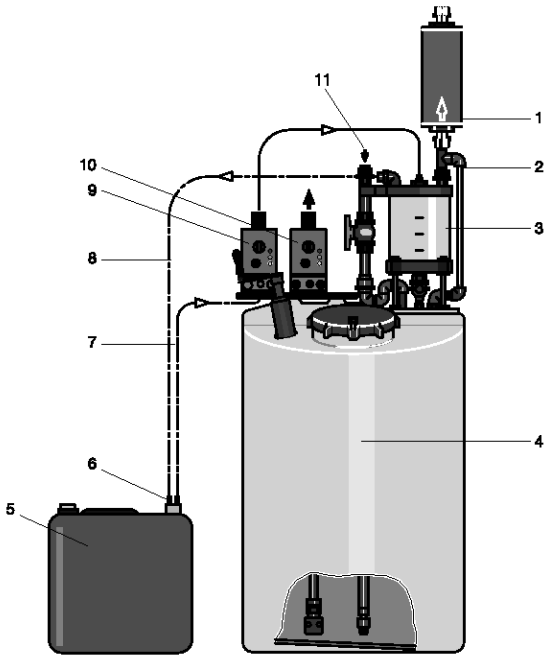

pk_7_078

1 Active carbon filter
2 Breather line
3 Apportioning unit
4 Metering tank
5 Hydrazin 15 returnable canister
6 Quick release coupling
7 Metering line
8 Gas shuttle line
9 Refilling pump
10 Metering pump
11 Fill water

4.3 Hydrazin Dosing Systems DULCODOS® Hydrazin

Hydrazine transfer and dosing systems, fully pre-assembled

Dosing Tank Contents	Metering pump Capacity	Metering pump Feed Rate	Transfer Pump Discharge Flow	Order no.
140 l	7.1 l/h	7.0 bar	17 l/h	913018
250 l	11.0 l/h	7.0 bar	32 l/h	913019

Accessories

	Order no.
Sampling set stainless steel	1003964
200 l collecting pan*	on request
1,000 l collecting pan*	on request

* with qualification approval, with galvanised diagrid

4.4 Liquid Enzyme Dosing Systems DULCODOS® PPLA

4.4.1 Liquid Enzyme Dosing Systems DULCODOS® PPLA

Dosing of liquid products plays a vital role in the manufacture of animal food. Vitamins and enzymes are the best known examples of liquid additives.

The raw materials for the feed are ground, mixed and then compressed into pellets.
ProMinent® DULCODOS® PPLA dosing systems (Post Pelleting Liquid Application) are used to apply the liquid additive coating after the feed has been pelletised.

The liquid products are stored in a container and then transferred to the dosing station day tank with the aid of a filling pump. Water is used as a carrier to ensure the required even distribution of the additive in the feed. One pump is used for the additive and a second pump for the dilution water. The additives and the water are brought together in a mixing station and adequately mixed via a static mixer. The diluted additive is sprayed onto the animal feed via a nozzle.

ProMinent® DULCODOS® PPLA dosing systems have a modular construction and can be adapted and extended very easily. They offer a complete solution for storage, decanting, dosing and application of all types of additives. Standard solutions in a range from below 50 ppm to above 1000 ppm are possible.

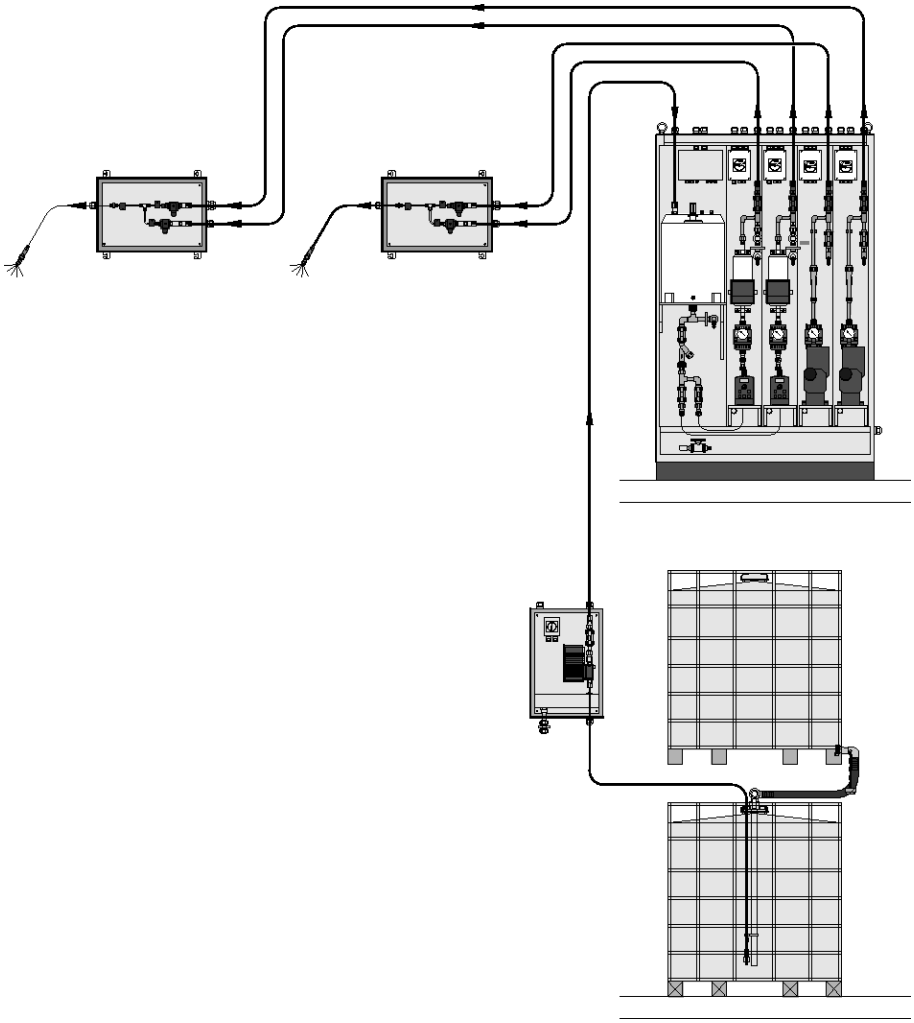

pk_4_PPLA

Prices and delivery time on request

4.4 Liquid Enzyme Dosing Systems DULCODOS® PPLA

4.5 Swimming Pool Dosing Systems DULCODOS® Pool

4.5.1 Swimming Pool Dosing Systems DULCODOS® Pool

The dosing systems DULCODOS® Pool were designed especially for the conditioning of swimming pool water. Pre-mounted and ready for connection, they take care of the pH value adjustment and the disinfection – be it with chlorine or active oxygen. Various types and a comprehensive upgrade programme offer the suitable solution for any application.

DULCODOS® Pool dosing systems are equipped with all required components, ideally matched and mounted on a panel:

- Sensors
- Controllers
- Metering pumps

Advantages

- Delivery ready for connection
- Simple and quick assembly
- Graded programm
- Numerous upgrading options
- High disinfection effect
- Precise metering
- High level of safety

Application Areas

Automatic disinfection and pH value adjustment for

- Private swimming pools
- Hotel pools
- Therapeutic baths
- Public swimming pools

DULCODOS® Pool dosing systems can be selected and ordered using an Identcode system:

		Measuring and control					Metering				
Application	**Identcode: Feature measured variable**	**pH**	**ORP**	**Free chlorine**	**Total chlorine***	**H_2O_2**	**Acid**	**Chlo-rine**	**Active oxygen**	**Controllers**	**see chapter**
Private swimming pool	PR0	x	x				x	x		DSR	4.5.2
Upscale private swimming pool	PR2	x	x				x	x		D2C	4.5.3
	PC2	x		x			x	x		D2C	4.5.3
	PC4	x			x		x	x		D2C	4.5.3
Upscale private swimming pool	PC5	x	x				x	x		DXC	4.5.4
Public swimming pool	PC6	x		x			x	x		DXC	4.5.4
-Therapeutic bath	PC7	x	x	x			x	x		DXC	4.5.4
	PC8	x	x	x	x		x	x		DXC	4.5.4
	PC9	x			x		x	x		DXC	4.5.4
	PCA	x	x		x		x	x		DXC	4.5.4
Private swimming pool	P02	x					x		x	D1C	4.5.5
	PH1	x				x	x		x	2 x D1C	4.5.5

* Total chlorine = organically combined chlorine (isocyanuric acid derivatives)

4.5 Swimming Pool Dosing Systems DULCODOS® Pool

4.5.2 DULCODOS® Pool PR0

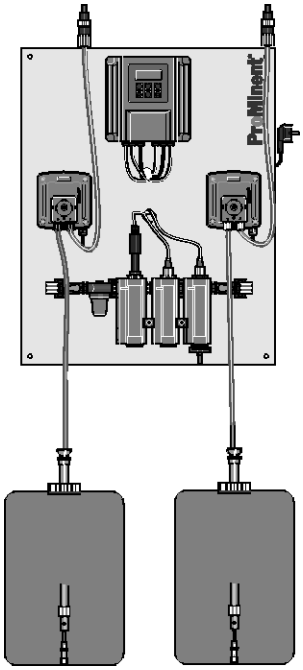

pk_7_100

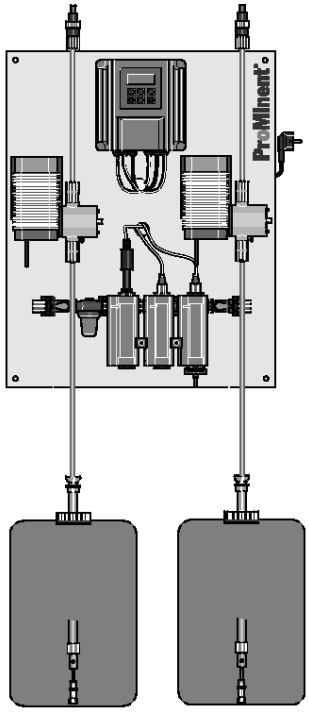

pk_7_101

Complete system for pH value adjustment and disinfection with liquid chlorine products, consisting of:

- Sensors for pH value and ORP
- 2-channel swimming pool controller DSR with control function for pH value and ORP and integrated suction function
- In-line probe with sample water filter and flow monitoring

Dimensions	595 x 745 x 150 mm (W x H x D)
Weight	approx. 10 kg and 6 kg, resp. (without pumps)
Connection for metering station	Dosing valves with 1/2" screw-in-thread
Connection for sample water line	8x5 mm PE hose
Electrical connection	230 VAC, 50 Hz alternative with Euro or Swiss connector
Recommended area of application	■ Private swimming pool

4.5 Swimming Pool Dosing Systems DULCODOS® Pool

Identcode Ordering System, DULCODOS® Pool PR0

DSPa	Measured variable														
	PR0	pH / ORP (DSR)													
		Hardware-additional functions													
		0	Standard												
			Software-additional functions												
			0	without											
				Communication interfaces											
				0	without										
					Electrical connection										
					A	230 V, 50/60 Hz, Euro connector									
					B	230 V, 50/60 Hz, Swiss connector									
						Sensor equipment									
						0	with sensors								
						A	Measured variable PR0 without sensors								
							Version								
							0	with logo							
							1	without logo							
								Language							
								D	German						
								E	English						
								F	French						
								G	Czech						
								I	Italian						
								N	Dutch						
								R	Russian						
								S	Spanish						
									Metering pumps for acids/alkalis						
									0	without metering pumps					
									1	0.8 l/h (DULCO®flex DF2a 0208)					
									2	1.6 l/h (DULCO®flex DF2a 0216)					
									3	2.4 l/h (DULCO®flex DF2a 0224)					
									4	1.2 l/h (alpha ALPc 1001 PP1)					
									5	2.4 l/h (alpha ALPc 1002 PP1)					
										Multi-function valve for acid/alkali pump					
										0	none				
										1	with MFV (only for alpha)				
											Metering pumps for disinfection				
											0	without metering pumps			
											1	0.8 l/h Dulco®flex up to 45/10 m³/h circulation HB/FB*			
											2	1.6 l/h Dulco®flex for up to 100/20 m³/h circulation HB/FB*			
											3	2.4 l/h Dulco®flex for up to 140/30 m³/h circulation HB/FB*			
											4	1.2 l/h alpha for up to 70/14 m³/h circulation HB/FB*			
											5	2.4 l/h alpha for up to 140/30 m³/h circulation HB/FB*			
												Multi-function valve for pump Disinfection			
												0	none		
												1	with MFV (only for alpha)		
													Installation		
													0	not assembled, delivery without mounting plate	
													1	mounted on base plate	
														Approvals	
														0	CE

* Calculated for 12 % sodium hypochlorite
HB = indoor swimming pool
FB = outdoor swimming pool

4.5 Swimming Pool Dosing Systems DULCODOS® Pool

4.5.3 DULCODOS® Pool, PR2, PC2, PC4

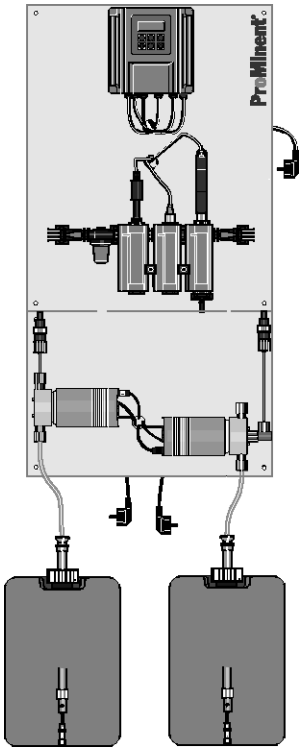

pk_7_102

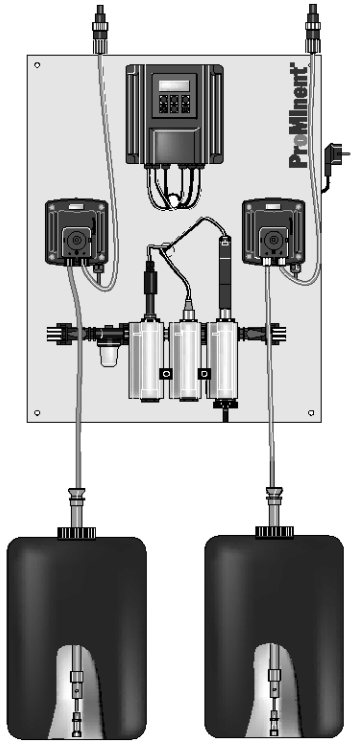

P_DD_0029_SW

Complete system for pH value adjustment and disinfection with liquid chlorine products, consisting of:

- Sensors:
  Type PR2: pH value and ORP
  Type PC2: pH value and chlorine sensors (free chlorine)
  Type PC4: pH value and chlorine sensors (total chlorine)
- 2-channel D2C controller with control function for pH value and ORP or pH value and chlorine concentration
- In-line probe with sample water filter and flow monitoring.

Dimensions	**with alpha:** 595 x 745 x 150 mm (W x H x D) mounting plate for measuring instruments 595 x 400 x 150 mm (W x H x D) mounting plate for pumps **with DULCO®flex:** 595 x 745 x 150 mm (W x H x D)
Weight	approx. 10 kg and 6 kg, resp. (without pumps)
Connection for metering station	Metering valves with 1/2" screw-in thread
Connection for sample water line	8x5 mm PE hose
Electrical connection	230 VAC, 50 Hz alternative with Euro or Swiss connector
Recommended area of application	■ upscale private swimming pool

4.5 Swimming Pool Dosing Systems DULCODOS® Pool

Identcode Ordering System, DULCODOS® Pool PR2, PC2, PC4

DSPa	Measured variable														
	PR2	pH / ORP (D2C)													
	PC2	pH / free chlorine (D2C)													
	PC4	pH / total chlorine (D2C)													
		Hardware-additional functions													
		0	Standard												
			Software-additional functions												
			0	without											
				Communication interfaces											
				0	without										
					Electrical connection										
					A	230 V, 50/60 Hz, Euro connector									
					B	230 V, 50/60 Hz, Swiss connector									
						Sensor equipment									
						0	with sensors								
						A	Measured variable PR2 without sensors								
						B	Measured variable PC2 without sensors								
						C	Measured variable PC4 without sensors								
							Version								
							0	with logo							
							1	without logo							
								Language							
								A	Swedish						
								D	German						
								E	English						
								F	French						
								I	Italian						
								N	Dutch						
								P	Polish						
								S	Spanish						
									Metering pumps for acids/alkalis						
									0	without metering pumps					
									1	0.8 l/h (Dulco®flex DF2a 0208)					
									2	1.6 l/h (Dulco®flex DF2a 0216)					
									3	2.4 l/h (Dulco®flex DF2a 0224)					
									4	1.2 l/h (alpha ALPc 1001 PP1)					
									5	2.4 l/h (alpha ALPc 1002 PP1)					
									6	1.5 l/h (Beta® BT4a 0401 PPE)					
									7	2.8 l/h (Beta® BT4a 0402 PPE)					
									8	5.3 l/h (Beta® BT4a 0405 PPE)					
										Multi-function valve for acid/alkali pump					
										0	without				
										1	with MFV (only for Beta®and alpha)				
											Metering pumps for disinfection				
											0	without metering pumps			
											1	0.8 l/h Dulco®flex for up to 45/10 m³/h circulation HB/FB*			
											2	1.6 l/h Dulco®flex for up to 100/20 m³/h circulation HB/FB*			
											3	2.4 l/h Dulco®flex for up to 140/30 m³/h circulation HB/FB*			
											4	1.2 l/h alpha for up to 70/14 m³/h circulation HB/FB*			
											5	2.4 l/h alpha for up to 140/30 m³/h circulation HB/FB*			
											6	0.9 l/h Beta® for up to 50/10 m³/h circulation HB/FB*			
											7	2.1 l/h Beta® for up to 125/25 m³/h circulation HB/FB*			
											8	4.2 l/h Beta® for up to 250/50 m³/h circulation HB/FB*			
												Multi-function valve for pump Disinfection			
												0	without		
												1	with MFV (only for Beta® and alpha)		
													Installation		
													0	not assembled, delivery without mounting plate	
													1	mounted on base plate	
														Approvals	
														0	CE

* Calculated for 12 % sodium hypochlorite
HB = indoor swimming pool
FB = outdoor swimming pool

4.5 Swimming Pool Dosing Systems DULCODOS® Pool

4.5.4 DULCODOS® Pool PC5, PC6, PC7, PC8, PC9, PCA

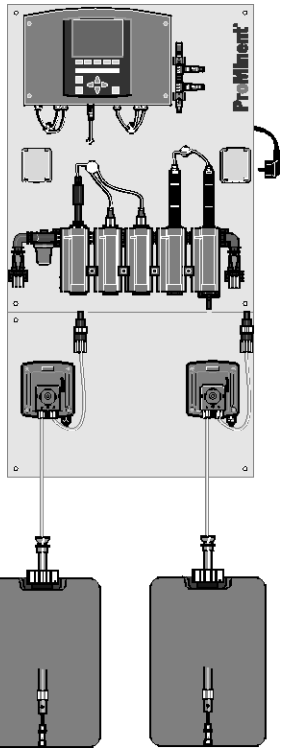

pk_7_104

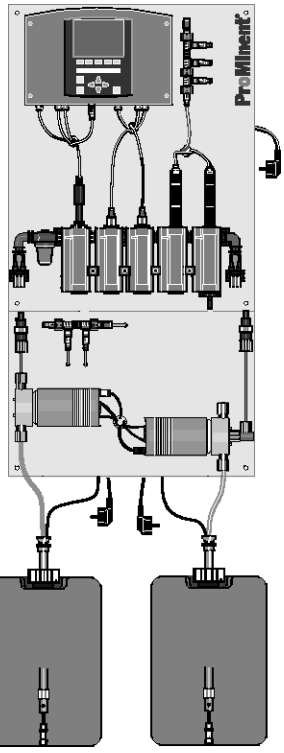

pk_7_105

Complete system for pH value adjustment and disinfection with liquid chlorine products, consisting of:

- Sensors:
  Type PC5: pH value and ORP
  Type PC6: pH value and chlorine sensor (free chlorine)
  Type PC7: pH value, ORP, and chlorine sensor (free chlorine)
  Type PC8: pH value, ORP, chlorine sensor total chlorine, and free chlorine)
  Type PC9: pH value and chlorine sensor total chlorine
  Type PCA: pH value, ORP and chlorine sensor total chlorine
- DULCOMARIN®II compact controller with control functions for pH value, ORP, and chlorine concentration
- In-line probe with sample water filter and flow monitoring

Dimensions	595 x 745 x 150 mm (W x H x D) plate for measuring instruments 595 x 400 x 150 mm (W x H x D) pumps
Weight	approx. 12 kg and 7 kg, resp. (without pumps)
Connection for metering station	Metering valves with 1/2" screw-in thread
Connection for sample water line	8x5 mm PE hose
Electrical connection	230 VAC, 50 Hz alternative with Euro or Swiss connector
Recommended area of application	■ Upscale private swimming pool ■ Public swimming pool ■ Therapeutic bath

4.5 Swimming Pool Dosing Systems DULCODOS® Pool

Identcode Ordering System, DULCODOS® Pool PC5, PC6, PC7, PC8, PC9, PCA

DSPa	Measured variable															
	PC5	pH / ORP (DXC)														
	PC6	pH / free chlorine (DXC)														
	PC7	pH / ORP / free chlorine (DXC)														
	PC8	pH / ORP / free chlorine / total chlorine (DXC)														
	PC9	pH / total chlorine (DXC)														
	PCA	pH / ORP / total chlorine (DXC)														
		Hardware-additional functions														
		0	Standard													
		A	4 Standard signal outputs 0/4-20mA measured value (A-module)													
			Software-additional functions													
			1	Videographic recorder with measuring data archiving incl. SD-Card												
				Communication interfaces												
				0	without											
				5	Embedded Web Server, LAN											
				6	OPC server + embedded web server											
					Electrical connection											
					A	230 V, 50/60 Hz, Euro connector										
					B	230 V, 50/60 Hz, Swiss connector										
						Sensor equipment										
						0	with sensors									
						A	Measured variable PC5 without sensors									
						E	Measured variable PC6 without sensors									
						F	Measured variable PC7 without sensors									
						G	Measured variable PC8 without sensors									
						H	Measured variable PC9 without sensors									
						I	Measured variable PCA without sensors									
							Version									
							0	with logo								
							1	without logo								
								Language								
								D	German							
								E	English							
								F	French							
								I	Italian							
								P	Polish							
								S	Spanish							
									Metering pumps for acids/alkalis							
									0	without metering pumps						
									1	0.8 l/h (Dulco®flex DF2a 0208)						
									2	1.6 l/h (Dulco®flex DF2a 0216)						
									3	2.4 l/h (Dulco®flex DF2a 0224)						
									4	1.2 l/h (alpha ALPc 1001 PP1)						
									5	2.4 l/h (alpha ALPc 1002 PP1)						
									A	1.5 l/h (Beta® CANopen BT4a 0401 PPE)						
									B	2.8 l/h (Beta® CANopen BT4a 0402 PPE)						
									C	5.3 l/h (Beta® CANopen BT4a 0405 PPE)						
										Multi-function valve for acid/alkali pump						
										0	without					
										1	with MFV (only for Beta®)					
											Metering pumps for disinfection					
											0	without metering pumps				
											1	0.8 l/h Dulco®flex for up to 45/10 m³/h circulation HB/FB*				
											2	1.6 l/h Dulco®flex for up to 100/20 m³/h circulation HB/FB*				
											3	2.4 l/h Dulco®flex for up to 140/30 m³/h circulation HB/FB*				
											4	1.2 l/h alpha for up to 70/14 m³/h circulation HB/FB*				
											5	2.4 l/h alpha for up to 140/30 m³/h circulation HB/FB*				
											A	0.9 l/h Beta® for up to 50/10 m³/h circulation HB/FB*				
											B	2.1 l/h Beta® for up to 125/25 m³/h circulation HB/FB*				
											C	4.2 l/h Beta® for up to 250/50 m³/h circulation HB/FB*				
												Multi-function valve for pump Disinfection				
												0	without			
												1	with MFV (only for Beta®)			
													Installation			
													0	not assembled, delivery without mounting plate		
													1	mounted on base plate		
														Approvals		
														0	CE	

* Calculated for 12 % sodium hypochlorite
HB = indoor swimming pool
FB = outdoor swimming pool

4.5 Swimming Pool Dosing Systems DULCODOS® Pool

4.5.5 DULCODOS® Pool, P02, PH1

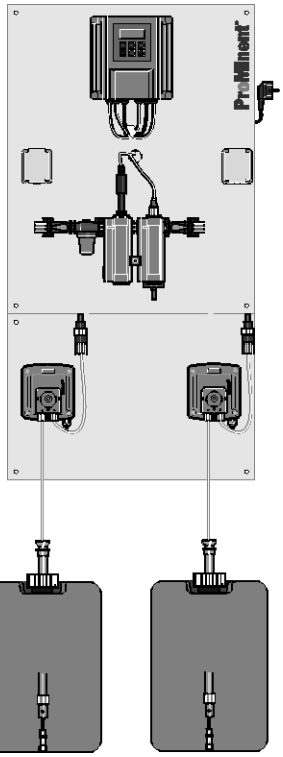

pk_7_103

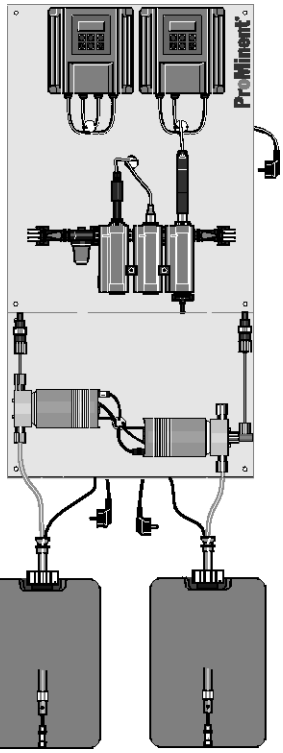

pk_7_107

Complete system for pH value adjustment and chlorine-free disinfection with active oxygen, consisting of:

- Sensors:
  Type PC02: pH value sensor
  Type PH1: pH value and H_2O_2 sensor
- Type P02: D1C controller with control functions for pH value and timer function to control the active oxygen pump
- Type PH1: D1C controller with control function for pH value and control function for active oxygen concentration
- In-line probe with sample water filter and flow monitoring

Dimensions	595 x 745 x 150 mm (W x H x D) mounting plate for measuring instruments 595 x 400 x 150 mm (W x H x D) mounting plate for pumps
Weight	approx. 12 kg and 7 kg, resp. (without pumps)
Connection for metering station	Metering valves with 1/2" screw-in thread
Connection for sample water line	8x5 mm PE hose
Electrical connection	230 VAC, 50 Hz alternative with Euro or Swiss connector
Recommended area of application	■ Private swimming pool

4.5 Swimming Pool Dosing Systems DULCODOS® Pool

Identcode Ordering System, DULCODOS® Pool P02, PH1

DSPa	Measured variable														
	P02	pH / timer control H_2O_2 (D1C)													
	PH1	pH / H_2O_2 (2 x D1C)													
		Hardware-additional functions													
		0	Standard												
			Software-additional functions												
			0	without											
				Communication interfaces											
				0	without										
					Electrical connection										
					A	230 V, 50/60 Hz, Euro connector									
					B	230 V, 50/60 Hz, Swiss connector									
						Sensor equipment									
						0	with sensors								
						1	Measured variable P02 without sensors								
						D	Measured variable PH1 without sensors								
							Version								
							0	with logo							
							1	without logo							
								Language							
								A	Swedish						
								D	German						
								E	English						
								F	French						
								G	Czech						
								H	Swiss						
								I	Italian						
								N	Dutch						
								P	Polish						
								S	Spanish						
									Metering pumps for acids/alkalis						
									0	without metering pumps					
									1	0.8 l/h (Dulco®flex DF2a 0208)					
									2	1.6 l/h (Dulco®flex DF2a 0216)					
									3	2.4 l/h (Dulco®flex DF2a 0224)					
									4	1.2 l/h (alpha ALPc 1001 PP1)					
									5	2.4 l/h (alpha ALPc 1002 PP1)					
									6	1.5 l/h (Beta® BT4a 0401 PPE)					
									7	2.8 l/h (Beta® BT4a 0402 PPE)					
									8	5.3 l/h (Beta® BT4a 0405 PPE)					
										Multi-function valve for acid/alkali pump					
										0	without				
										1	with MFV (only for Beta® and alpha)				
											Metering pumps for disinfection				
											0	without metering pumps			
											1	0.8 l/h (Dulco®flex DF2a 0208)			
											2	1.6 l/h (Dulco®flex DF2a 0216)			
											3	2.4 l/h (Dulco®flex DF2a 0224)			
											4	1.2 l/h (alpha ALPb 1001 PP1)			
											5	2.4 l/h (alpha ALPb 1002 PP1)			
											6	0.9 l/h (Beta® BT4a 0401 NPB)			
											7	2.1 l/h (Beta® BT4a 0402 PPE)			
											8	4.2 l/h (Beta® BT4a 0405 PPE)			
												Multi-function valve for pump Disinfection			
												0	without		
												1	with MFV (only for Beta® and alpha)		
													Installation		
													0	not assembled, delivery without mounting plate	
													1	mounted on base plate	
														Approvals	
														0	CE

4.5 Swimming Pool Dosing Systems DULCODOS® Pool

4.6 Customized Dosing Systems DULCODOS® custom

4.6.1 Customized Dosing Systems DULCODOS® custom

ProMinent supplies pre-assembled, turnkey systems custom designed to customer specifications:

- Dosing systems including pumps and accessories. Portable, (fig. A) or directly attachable to skeleton containers (fig. B).
- Panel mounted metering systems (fig. C) or frame-mounted (fig. D).
- Dosing systems mounted on metering tank (fig. E) and with drip pan and metering tank (fig. F).
- Dosing systems in metering cabinet for indoor or outdoor locations (fig. G).

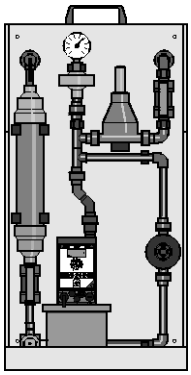

pk_7_035
Fig. A: Portable dosing stations

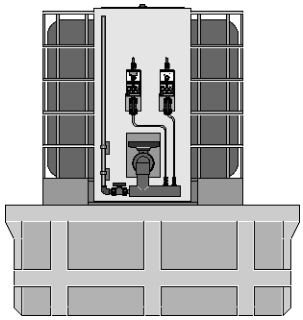

pk_7_036

Fig. B: Dosing stations, can be suspended from wire frame

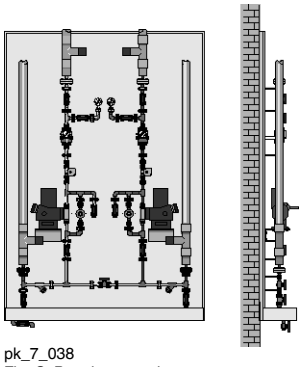

pk_7_038
Fig. C: Panel mounted system

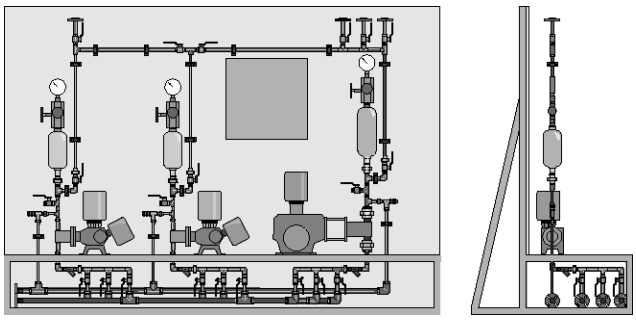

pk_7_040
Fig. D: Frame mounted dosing systems

4.6 Customized Dosing Systems DULCODOS® custom

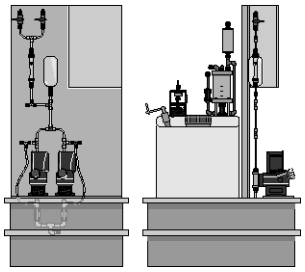

pk_7_037

Fig. E: Dosing stations mounted onto dosing tanks

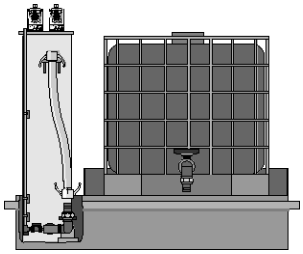

pk_7_041

Fig. F: Dosing system with collecting pan and chemical feed tank

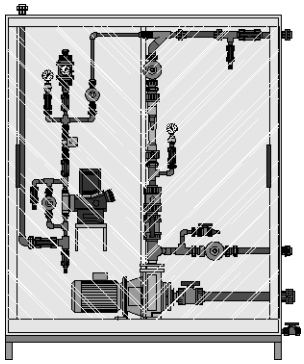

pk_7_039

Fig. G: Dosing System in dosing cabinet

In addition to the standard materials PVC, PP, PVDF and stainless steel, specialist materials such as PFA are also possible.

On request, ProMinent will equip the system with measurement and control equipment, terminal boxes, control cabinet or, for larger systems, with PLC control. We will be happy to meet your processing requirements with tailor-made function modules.

Each system is hydraulically and electrically tested on the factory premises.

A team of specialists is available to advise you.

4.7 Polymer Preparation and Dosing Systems Ultromat®

4.7.1 Ultromat® Systems

Ultromat® systems have been designed specially for the production of stock solutions and process solutions of synthetic polyelectrolytes and have been well proven in the field. The use of polyelectrolytes as flocculants or flocculation aids have many areas of application. They can be used wherever colloidal solids need to be removed cost-effectively from liquids.

Recommended applications include:

- Treatment of drinking water
- Waste water treatment
- Sludge dewatering
- Treatment of process and circulation water
- Paper manufacture
- Chemical industry, power stations etc.

There are 3 available system designs:

- Continuous flow system (identity code ULFa)
- Oscillating system (identity code ULPa)
- Double-deck system (identity code ULDa)

The systems are differentiated from each other principally due to the construction of the storage tank. The storage tank in the continuous flow system is sub-divided into 3 chambers, thereby substantially preventing fresh polymer mixing with matured polymer. The oscillating and double-deck systems are designed with two completely separate storage tanks, thereby preventing the mixing of fresh and matured polymer.

Dry feeders and liquid concentrate pumps can be freely selected using the identity code, enabling powdered or liquid polymers to be prepared depending on the respective application.

The Ultromat® systems ULFa, ULPa and ULDa are equipped with a PLC compact control and touch screen. The PLC compact control can optionally be fitted with a Profibus module. The solution concentrations and the calibration of the dry feeder and the liquid concentrate pump are controlled by the operator. Alarm messages and warnings are shown on the display. A flow monitor continuously determines the input of dilution water and shows this on the display. Based on the preset solution concentration, the control calculates the requirement of polymer and controls the dry feeder or the concentrate pump proportionately, thereby ensuring that the concentration of polymer solution remains constant even when the water supply fluctuates.

Application example for a complete polymer dosing system:

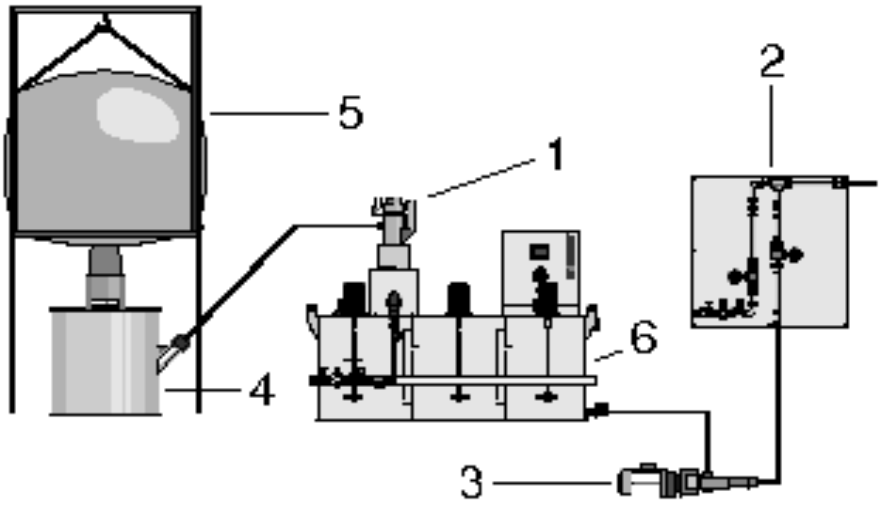

AP_0002_SW

1 Powder delivery unit
2 Re-dilution
3 Transfer pump
4 Powder storage tank
5 Big-Bag
6 Ultromat®

4.7 Polymer Preparation and Dosing Systems Ultromat®

4.7.2 Ultromat® ULFa Continuous Flow Systems

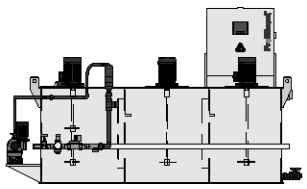

P_UL_0024_SW1
Ultromat® ULFa for liquid polymers

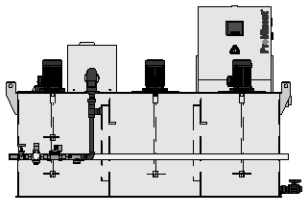

P_UL_0022_SW1
Ultromat® ULFa for powder polymers

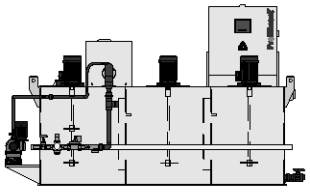

P_UL_0023_SW1
Ultromat® ULFa for powder and liquid polymers

Ultromat® continuous flow systems ULFa for the batching of flocculation aids for the preparation of a polymer solution. The tank is sub-divided into three chambers. The polymer solution is discharged and the individual chambers are emptied at the front end of the storage tank.

The following types of polymers can be processed:

- Liquid polymer (0.05 – 1.0 %)
- Powder polymer (0.05 – 0.5 %)

The continuous flow system can be simply, quickly and flexibly adapted to your application using the ULFa ident code.

Selectable components:

- Storage tank type / Discharge volume
- Construction (standard or mirror-imaged)
- Electrical connection
- Control S7-1200 (without and without PROFIBUS®)
- Options
- Dry feeder
- Vibrator for dry feeder (promotes the continuous feeding of polymer)
- Powder delivery unit FG205 / add-on hopper (to fill and supply the dry feeder)
- Liquid concentrate pump
- Monitor for liquid concentrate pump (float switch/flow gauge)
- Wetting fitting (Y-wetting fitting or wetting cone)
- Agitator for 3rd chamber
- Language (default language for control panel)

The following functions are included as standard:

- Control S7-1200 + Touch panel KTP 400
- Pressure sensor for measuring the filling level
- Pause function/operating alert
- Monitoring of dilution unit
- Lifting lugs for transportation
- Socket for feed unit FG205 (only if the dry feeder is selected)

Technical Data

Discharge volume	l/h	400	1,000	2,000	4,000	6,000	8,000
Tank volume	l	400	1,000	2,000	4,000	6,000	8,000
Diluent water max.	l/h	1,500	1,500	3,000	6,000	9,000	12,000
Water pressure	bar	3–5	3–5	3–5	3–5	3–5	3–5
Powdery polymer	kg/h	0.5–11	0.5–11	0.8–18	3.6–55	3.6–55	4.8–110
Length	mm	1,999	2,643	3,292	3,301	4,120	4,605
Width	mm	918	1,002	1,186	1,456	1,651	1,910
Height	mm	1,250	1,600	1,750	2,182	2,172	2,290
Water connection	"	1	1	1	1 1/2	1 1/2	2
Discharge nozzle DN	mm	25	25	32	40	40	50
Concentrate addition DN	mm	15	15	15	20	20	20
Voltage/Frequency	VAC/Hz	400/50	400/50	400/50	400/50	400/50	400/50
Power Uptake	kW	1.5	2.6	3.2	5.0	5.0	9.5

4.7 Polymer Preparation and Dosing Systems Ultromat®

Identcode Ordering System for Ultromat® ULFa Continuous Flow Systems

ULFa	Type / Tank size / Discharge volume													
	0400	Continuous flow system / 400 l / 400 l/h												
	1000	Continuous flow system / 1000 l / 1000 l/h												
	2000	Continuous flow system / 2000 l / 2000 l/h												
	4000	Continuous flow system / 4000 l / 4000 l/h												
	6000	Continuous flow system / 6000 l / 6000 l/h												
	8000	Continuous flow system / 8000 l / 8000 l/h												
		Design												
		N	standard											
		S	mirror-imaged											
			Electrical connection											
			A	400 VAC, 50/60 Hz (3ph, N, PE)										
				Control										
				0	SPS S7-1200									
				1	SPS S7-1200 with PROFIBUS®									
					Options									
					0	without options								
						Dry feeder								
						P0	none							
						P1	Dry feeder (0400, 1000)							
						P2	Dry feeder (2000)							
						P3	Dry feeder (4000, 6000)							
						P4	Dry feeder (8000)							
							Vibrator for powder feeder							
							0	without						
							1	with vibrator for powder feeder						
								Add-on hopper, hopper loader FG 205						
								0	none					
								1	with add-on hopper 50 l (0400, 1000, 2000)					
								2	with add-on hopper 75 l (4000, 6000)					
								3	with add-on hopper 100 l (8000)					
								4	with add-on hopper 50 l + powder delivery unit FG205 (0400, 1000, 2000)					
								5	with add-on hopper 75 l + powder delivery unit FG205 (4000, 6000)					
								6	with add-on hopper 100 l + powder delivery unit FG205 (8000)					
								7	with adapter cover + powder delivery unit FG205					
									Liquid concentrate pump					
									L0	without				
									L1	with Sigma				
									L2	with Spectra				
									L3	prepared for Sigma				
									L4	prepared for Spectra				
										Monitoring for liquid concentrate pump				
										0	without			
										1	with float switch for concentrate tank			
										2	with flow monitor (only Spectra)			
										3	with float switch and flow monitor (only Spectra)			
											Water pipework with wetting fitting			
											1	Y-wetting fitting, PVC (0400, 1000, 2000)		
											2	Y-wetting fitting, PVC (4000, 6000)		
											3	Y-wetting fitting, PVC (8000)		
											4	Wetting cone, PVC (0400, 1000, 2000)		
											5	Wetting cone, PVC (4000, 6000)		
											6	Wetting cone, PVC (8000)		
											7	Wetting cone, PP (0400, 1000, 2000)		
											8	Wetting cone, PP (4000, 6000)		
											9	Wetting cone, PP (8000)		
												Agitator for 3rd chamber		
												0	without	
												1	Agitator for storage tank 400, 0.18 kW	
												2	Agitator for storage tank 1000, 0.55 kW	
												3	Agitator for storage tank 2000, 0.75 kW	
												4	Agitator for storage tank 4000/6000, 1.1 kW	
												5	Agitator for storage tank 8000, 2.2 kW	
													Language	
													DE	German
													EN	English
													FR	French
													ES	Spanish
													IT	Italian
													CZ	Czech
													NL	Dutch
													PL	Polish
													RU	Russian

4.7 Polymer Preparation and Dosing Systems Ultromat®

4.7.3 Ultromat® ULPa Oscillating Systems

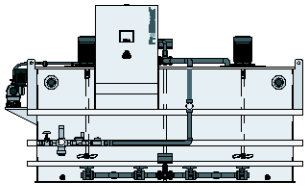

P_UL_0026_SW1
Ultromat® ULPa for liquid polymers

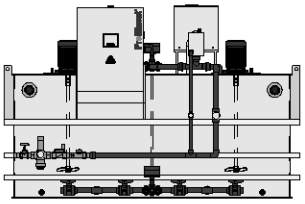

P_UL_0027_SW1
Ultromat® ULPa for powder polymers

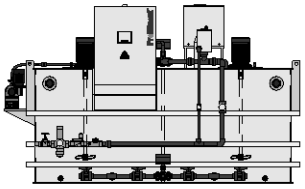

P_UL_0028_SW1
Ultromat® ULPa for powder and liquid polymers

Ultromat® oscillating systems for the batching of flocculation aids for the preparation of a polymer solution.

The Ultromat storage tank is sub-divided into two separate storage tanks.

The following types of polymers can be processed:

- Liquid polymer (0.05 – 1.0 %)
- Powder polymer (0.05 – 0.5 %)

Selectable components:

- Storage tank type / Discharge volume
- Construction (standard or mirror-imaged)
- Electrical connection
- Control S7-1200 (without and without PROFIBUS®)
- Options
- Dry feeder
- Vibrator for dry feeder (promotes the continuous feeding of polymer)
- Powder delivery unit FG205 / add-on hopper (to fill and supply the dry feeder)
- Liquid concentrate pump
- Monitor for liquid concentrate pump (float switch/flow gauge)
- Wetting fitting
- Language (default language for control panel)

The following functions are included as standard:

- Control S7-1200 + Touch panel KTP 400
- Pressure sensors for measuring the filling level
- Pause function/operating alert
- Monitoring of dilution unit
- Lifting lugs for transportation
- Socket for feed unit FG205 (only if the dry feeder is selected)

Technical Data

Discharge volume	l/h	400	1,000	2,000	4,000
Tank volume	l	2 x 400	2 x 1,000	2 x 2,000	2 x 4,000
Diluent water max.	l/h	1,600	4,000	8,000	14,000
Water pressure	bar	3–5	3–5	3–5	3–5
Powdery polymer	kg/h	0.5–11	0.8–18	3.6–55	4.8–110
Length	mm	2,095	2,895	3,395	4,595
Width	mm	1,254	1,734	1,919	2,645
Height	mm	1,635	1,738	2,180	2,400
Water connection	"	1	1 1/4	1 1/2	2
Discharge nozzle DN	mm	25	32	40	50
Concentrate addition DN	mm	15	15	20	20
Voltage/Frequency	VAC/Hz	400/50	400/50	400/50	400/50
Power Uptake	kW	2.5	3.2	5.5	7.0

4.7 Polymer Preparation and Dosing Systems Ultromat®

Identcode Ordering System for Ultromat® ULPa Oscillating Systems

ULPa	Type / Tank size / Discharge volume												
	0400	Oscillating system / 2x400 l / 400 l/h											
	1000	Oscillating system / 2x1,000 l / 1,000 l/h											
	2000	Oscillating system / 2x2,000 l / 2,000 l/h											
	4000	Oscillating system / 2x4,000 l / 4,000 l/h											
		Construction											
		N	standard										
		S	mirror-imaged										
			Electrical connection										
			A	400 VAC, 50/60 Hz (3ph, N, PE)									
				Control									
				0	SPS S7-1200								
				1	SPS S7-1200 with PROFIBUS®								
					Options								
					0	without options							
						Dry feeder							
						P0	none						
						P1	Dry feeder (0400)						
						P2	Dry feeder (1000)						
						P3	Dry feeder (2000)						
						P4	Dry feeder (4000)						
							Vibrator for dry feeder						
							0	none					
							1	with vibrator for dry feeder					
								Dry feeder FG205, add-on hopper					
								0	none				
								1	with add-on hopper 50 l (0400, 1000)				
								2	with add-on hopper 75 l (2000)				
								3	with add-on hopper 100 l (4000)				
								4	with add-on hopper 50 l + powder delivery unit FG205 (0400, 1000)				
								5	with add-on hopper 75 l + powder delivery unit (2000)				
								6	with add-on hopper 100 l + powder delivery unit (4000)				
								7	with adapter cover + powder delivery unit				
									Liquid concentrate pump				
									L0	none			
									L1	with Sigma			
									L2	with Spectra			
									L3	prepared for Sigma			
									L4	prepared for Spectra			
										Monitor for liquid concentrate pump			
										0	none		
										1	with float switch for concentrate tank		
										2	with flow monitor (only Spectra)		
										3	with float switch and flow monitor (only Spectra)		
											Water pipework with wetting fitting		
											0	without wetting cone (liquid version)	
											1	Wetting cone, PVC (0400, 1000)	
											2	Wetting cone, PVC (2000)	
											3	Wetting cone, PVC (4000)	
											4	Wetting cone, PP (0400, 1000)	
											5	Wetting cone, PP (2000)	
											6	Wetting cone, PP (4000)	
												Language	
												DE	German
												EN	English
												FR	French
												ES	Spanish
												IT	Italian
												CZ	Czech
												NL	Dutch
												PL	Polish
												RU	Russian

4.7 Polymer Preparation and Dosing Systems Ultromat®

4.7.4 Ultromat® ULDa Double-Deck Systems

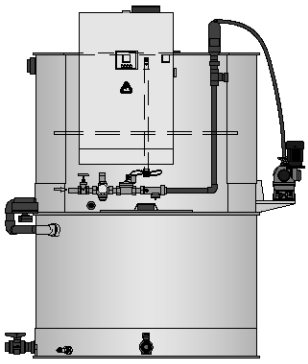

P_UL_0029_SW1
Ultromat® ULDa for liquid polymers

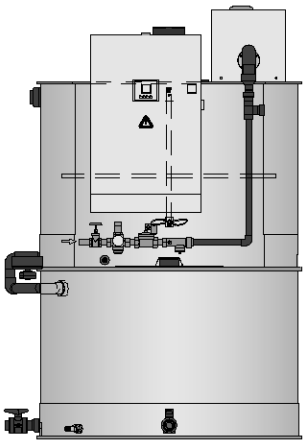

P_UL_0030_SW1
Ultromat® ULDa for powder polymers

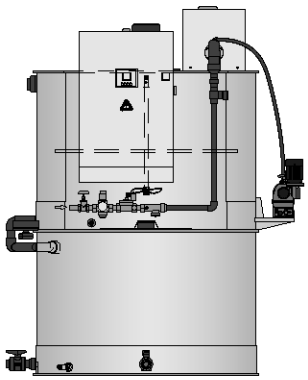

P_UL_0031_SW1
Ultromat® ULDa for powder and liquid polymers

Ultromat® double-deck systems for the batching of flocculation aids for the preparation of a polymer solution. The Ultromat® storage tank is sub-divided into two separate tanks on top of each other.

The following types of polymers can be processed:

- Liquid polymer (0.05 – 1.0 %)
- Powder polymer (0.05 – 0.5 %)

Selectable components:

- Storage tank type / Discharge volume
- Construction (standard or mirror-imaged)
- Electrical connection
- Control S7-1200 (without and without PROFIBUS®)
- Options
- Dry feeder
- Vibrator for dry feeder (promotes the continuous feeding of polymer)
- Powder delivery unit FG205 / add-on hopper (to fill and supply the dry feeder)
- Liquid concentrate pump
- Monitor for liquid concentrate pump (float switch/flow gauge)
- Wetting fitting (Y-wetting fitting or wetting cone)
- Language (default language for control panel)

The following functions are included as standard:

- Control S7-1200 + Touch panel KTP 400
- Pressure sensor for measuring the filling level
- Pause function/operating alert
- Monitoring of dilution unit
- Lifting lugs
- Socket for feed unit FG205 when the dry feeder is selected

Technical Data

Discharge volume	l/h	400	1,000	2,000
Tank volume	l	2 x 400	2 x 1,000	2 x 2,000
Diluent water max.	l/h	1,600	4,000	8,000
Water pressure	bar	3–5	3–5	3–5
Powdery polymer	kg/h	0.5–11	0.8–18	3.6–55
Length	mm	1,300	1,600	2,000
Width	mm	1,300	1,600	2,000
Height	mm	2,050	2,700	3,000
Water connection	"	1	1 1/4	1 1/2
Discharge nozzle DN	mm	25	32	40
Concentrate addition DN	mm	15	15	20
Voltage/Frequency	VAC/Hz	400/50	400/50	400/50
Power Uptake	kW	1.5	2.6	3.2

4.7 Polymer Preparation and Dosing Systems Ultromat®

Identcode Ordering System for Ultromat® ULDa Double-deck Systems

ULDa	Type / Tank size / Discharge volume												
	0400	Double-deck system / 2x400 l / 400 l/h											
	1000	Double-deck system / 2x1,000 l / 1,000 l/h											
	2000	Double-deck system / 2x2,000 l / 2,000 l/h											
		Construction											
		N	standard										
		S	mirror-imaged										
			Electrical connection										
			A	400 VAC, 50/60 Hz (3ph, N, PE)									
				Control									
				0	SPS S7-1200								
				1	SPS S7-1200 with PROFIBUS®								
					Options								
					0	without options							
						Dry feeder							
						P0	none						
						P1	Dry feeder (0400)						
						P2	Dry feeder (1000)						
						P3	Dry feeder (2000)						
							Vibrator for dry feeder						
							0	none					
							1	with vibrator for dry feeder					
								Dry feeder FG205, add-on hopper					
								0	none				
								1	with add-on hopper 50 l				
								2	with add-on hopper 75 l				
								3	with add-on hopper 100 l				
								4	with add-on hopper 50 l + powder delivery unit				
								5	with add-on hopper 75 l + powder delivery unit				
								6	with add-on hopper 100 l + powder delivery unit				
								7	with adapter cover + powder delivery unit				
									Liquid concentrate pump				
									L0	none			
									L1	with Sigma			
									L2	with Spectra			
									L3	prepared for Sigma			
									L4	prepared for Spectra			
										Monitor for liquid concentrate pump			
										0	none		
										1	with float switch for concentrate tank		
										2	with flow monitor (only Spectra)		
										3	with float switch and flow monitor (only Spectra)		
											Water pipework with wetting fitting		
											1	Y-wetting fitting, PVC (0400)	
											2	Y-wetting fitting, PVC (1000)	
											3	Y-wetting fitting, PVC (2000)	
											4	Wetting cone, PVC (0400)	
											5	Wetting cone, PVC (1000)	
											6	Wetting cone, PVC (2000)	
											7	Wetting cone, PP (0400)	
											8	Wetting cone, PP (1000)	
											9	Wetting cone, PP (2000)	
												Language	
												DE	German
												EN	English
												FR	French
												ES	Spanish
												IT	Italian
												CZ	Czech
												NL	Dutch
												PL	Polish
												RU	Russian

4.7 Polymer Preparation and Dosing Systems Ultromat®

4.7.5 Ultromat® ATR Continuous Flow System (with round tanks)

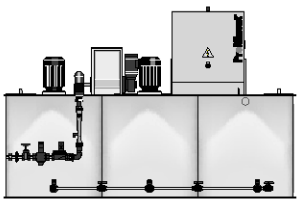

P_UL_0020_SW

Ready-for-use, assembled, automatic 3-chamber preparation system for powdery flocculants to prepare a 0.05 - 0.5 % polymer solution. The Ultromat® consists of 3 individual round PP tanks with the functions preparation, maturing, and storage tank. The round tanks are hydraulically connected to each other through overflow channels. The tanks are extraordinarily stable and require not additional reinforcements. This also significantly reduces the transport weight of the Ultromat® system.

The Ultromat® basically consists of the following components:

- Ultromat® tank comprising 3 individual round PP tanks with the functions preparation, maturing, and storage tank
- Dry feeder with drive motor, metering pipe heating and powder hopper with plug-in cover
- Wetting system for flushing-in and wetting of the powder, incl. wetting cone, flow meter and fitting kit for in-line water
- 2 slow electric agitators
- Control cabinet for automatic control of the entire system

Ultromat® ATR

	Use solution l/h	Order no.
Ultromat® ATR 400	400	1033810
Ultromat® ATR 1000	1,000	1033811
Ultromat® ATR 2000	2,000	1033812

Options

	Order no.
3rd Agitator for 0.18 kW for ATR 400	1033794
3rd Agitator for 0.55 kW for ATR 1000	1033795
3rd Agitator for 0.75 kW for ATR 2000	1033803
Overflow sensor for Ultromat® tank	1021604
Vibrator for powder feeder	1033808

Technical Data

Discharge volume	l/h	400	1,000	2,000
Tank volume	l	400	1,000	2,000
Diluent water max.	l/h	1,500	1,500	3,000
Water pressure	bar	3–5	3–5	3–5
Powdery polymer	kg/h	0.8–18	0.8–18	0.8–18
Length	mm	2,164	2,464	2,950
Width	mm	883	983	1,157
Height	mm	1,216	1,566	1,716
Water connection	"	1	1	1
Discharge nozzle DN	mm	25	25	32
Voltage/Frequency	VAC/Hz	400/50	400/50	400/50
Power Uptake	kW	1.5	2.6	3.2

4.7 Polymer Preparation and Dosing Systems Ultromat®

4.7.6 Ultromat® AFK Continuous Flow System (only for liquid polyelectrolytes)

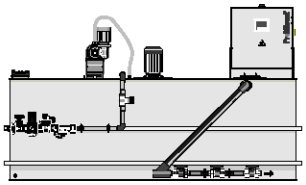

P_UL_0032_SW1
Ultromat® AFK

Assembled ready for use, automatic two-chamber continuous flow system for liquid flocculants for the preparation of a 0.05 – 1.0% metering solution, including an integral day tank for the storage of liquid concentrate.

The day tank can be continuously refilled using a transfer pump (e.g. Spectra) from the central chemical storage tank, thereby ensuring that priming problems do not occur when replacing the delivery drum because the suction lance is permanently immersed in the liquid polymer.

The Ultromat® AFK essentially consists of the following components:

- Combined preparation and storage tank with integral day tank for liquid concentrate. Storage tank manufactured from PP (standard) or stainless steel (optional)
- Metering pump Sigma (e.g.: S1CA H 12017 PVT 0000UA01000) with 4-20 mA current input for proportional metering of liquid concentrate, including injection valve and suction lance
- Dilution system with fitting kit and flow meter for the diluent water
- Slow electric stirrer with 2 propellers
- Control cabinet with S7-1200 control for the automatic control of the entire system.

Technical Data

Type		AFK260	AFK660	AFK1300	AFK2600
Discharge volume	l/h	400	1,000	2,000	4,000
Tank volume	l	260	660	1,300	2,600
Diluent water max.	l/h	1,500	1,500	3,000	6,000
Water pressure	bar	3–5	3–5	3–5	3–5
Metering pump Capacity	l/h	17	17	35	50
Metering pump type		S1CaH 12017 PVT	S1CaH 12017 PVT	S1CaH 12035 PVT	S1CaH 10050 PVT
Length	mm	1,640	2,276	2,917	2,954
Width	mm	925	960	1,110	1,530
Height	mm	1,250	1,605	1,720	1,952
Water connection	"	1	1	1	1 1/2
Discharge nozzle DN	mm	25	25	32	40
Concentrate addition DN	mm	15	15	15	20
Voltage/Frequency	VAC/Hz	400/50	400/50	400/50	400/50
Power Uptake	kW	1.5	2.6	3.2	5.0

4.7 Polymer Preparation and Dosing Systems Ultromat®

4.7.7 POLYMORE For Liquid Polyelectrolytes

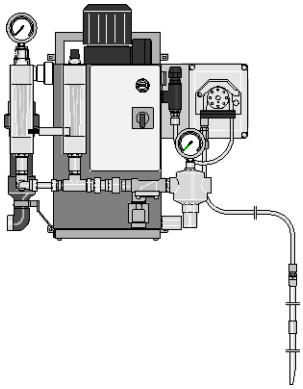

pk_7_091

POLYMORE is an in-line polymer preparation station for the processing of liquid polymers. Using a peristaltic pump, the liquid polymer is metered into the multi-zone mixer unit to the diluent water and processed into a homogeneous and effective polymer solution. The unit was designed for wall mounting and thus requires only little space. For commissioning, only water, liquid polymer and the supply voltage have to be connected to the unit. If the maturing time is not sufficient for certain applications, a maturing tank with agitator and metering pump can be installed downstream.

POLYMORE basically consists of the following components:

- peristaltic pump for metering the liquid polymer
- water fitting including pressure reducer, solenoid valve
- flameproof mixer unit for an effect preparation of the polymer solution
- re-dilution unit with static mixer and manometer
- control for automatic control of the system. manual or 4-20 mA control of the peristaltic pump.

	Diluent water max.	Metering output liquid polymer	Order no.
	l/h	kg/h	
POLYMORE mini 2-0.08	120	0.08	1029568
POLYMORE mini 3-0.6	180	0.60	1029570
POLYMORE mini 5-0.6	300	0.60	1029571
POLYMORE mini 5-1.2	300	1.20	1029572
POLYMORE mini 10-1.2	600	1.20	1029574
POLYMORE mini 10-2.4	600	2.40	1029575
POLYMORE mini 30-3.0	1,800	3.00	1029576
POLYMORE duo 40-6.0	2,400	4.00	1029577
POLYMORE duo 65-9.0	3,900	8.00	1029579
POLYMORE midi 100-12	6,000	12.00	1029580
POLYMORE midi 160-24	9,600	20.00	1029581
POLYMORE maxi 300-54	18,000	50.00	1029584

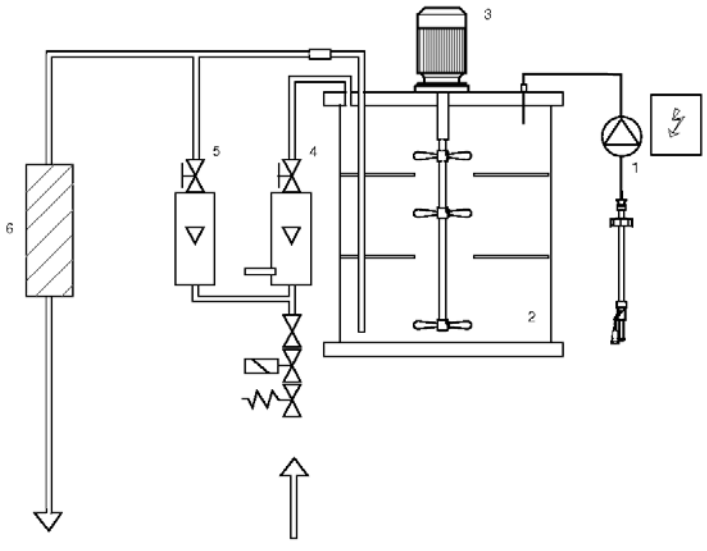

1 Peristaltic pump
2 Mixer unit
3 Agitator
4 Diluent water
5 Diluent water
6 Static mixer

AP_UL_0002_SW

4.7 Polymer Preparation and Dosing Systems Ultromat®

4.7.8 PolyRex For Powdery And Liquid Polyelectrolytes

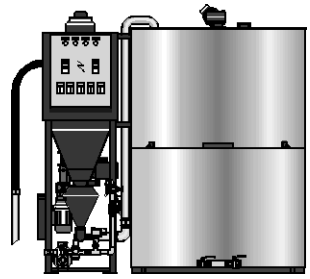

pk_7_092

PolyRex is a double-deck preparation station for the processing of liquid and powdery polymers. The preparation station consists of the delivery and mixer unit and the two double-deck tanks made of stainless steel. The upper tank is the preparation/maturing tank, the bottom tank is the storage tank for the prepared polymer solution. The powdery polymer is transported to the powder feeder by a vacuum conveyor and mixed with water in the bottom mixer unit. The solution is than transferred to the upper tank (preparation/maturing tank) using the water pressure of the diluent water. Having matured, the solution can be transferred to the bottom storage tank via the motor valve.

When using liquid polymers, the system switches to the Spectra eccentric screw pump.

The system is automatically controlled by a Siemens PLC S7.

PolyRex basically consists of the following components:

- vacuum conveyor and powder feeder to meter powdery polymers and an eccentric screw pump to meter liquid polymers.
- water fitting with wetting cone and injector to produce an effective and homogeneous-polymer solution from powdery polymers (modified system when using liquid polymers)
- double-deck tank made of stainless steel for maturing and storing the polymer solution.
- motor valve to transfer the solution to the storage tank.
- agitator in the upper tank for a gentle mixing of the polymer solution
- control cabinet with S7 control for automatic control of the system.

	Tank volume	Discharge volume	Metering output liquid polymer
	m^3	l/h	kg/h
PolyRex 0.6	2 x 0.30	240	1.2
PolyRex 1.0	2 x 0.60	460	2.3
PolyRex 2.0	2 x 1.00	940	4.7
PolyRex 3.0	2 x 1.50	1,280	6.4
PolyRex 4.0	2 x 2.00	1,900	9.5
PolyRex 5.4	2 x 2.70	2,400	12.0
PolyRex 6.6	2 x 3.30	3,200	16.0
PolyRex 8.4	2 x 4.20	3,820	19.2

4.7 Polymer Preparation and Dosing Systems Ultromat®

4.7.9 Ultromat® MT For Batch Operation

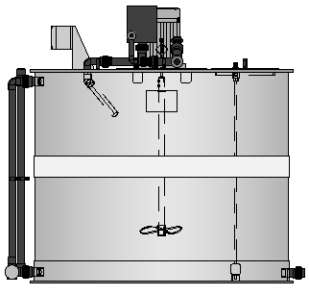

P_UL_0025_SW1

For manual preparation of products in liquid and powder form in batch operation. These systems are used if continuous operation is not required. The flocculant solution is prepared manually as a batch and, having matured, it can then be metered.

The systems consist of:

1 Batching tank made of PP
1 Wetting system for flushing in and wetting of the powder with wetting cone, injector and fitting kit for the in-line water
1 Slow electric stirrer
1 Level switch with three switching points
1 Terminal box

Ultromat® MT

	Order no.
Ultromat® MT 140, agitator 0.18 kW	1037073
Ultromat® MT 250, agitator 0.55 kW	1037094
Ultromat® MT 500, agitator 0.75 kW	1037095
Ultromat® MT 1000, agitator 1.1 kW	1037096
Ultromat® MT 2000, agitator 2.2 kW	1037097
Ultromat® MT 3000, agitator 2.2 kW	1037098
Ultromat® MT 4000, agitator 3 kW	1037099

Technical Data

Type		MT 140	MT 250	MT 500	MT 1000	MT 2000	MT 3000	MT 4000
Discharge volume	l/h	120	210	440	920	1,890	2,850	3,800
Tank volume	l	120	210	440	920	1,890	2,850	3,800
Diameter of tank(D)	mm	640	640	850	1,250	1,450	1,750	1,650
Height of tank (H1)	mm	700	1,100	1,000	1,000	1,500	1,600	2,050
Height	mm	1,020	1,410	1,300	1,340	1,840	2,000	2,400
Water connection DN	mm	20	20	20	25	32	40	40
Discharge nozzle DN	mm	20	20	20	25	32	40	40
Voltage/Frequency	VAC/Hz	400/ 50	400/ 50	400/ 50	400/ 50	400/ 50	400/ 50	400/ 50
Power Uptake	kW	0.18	0.55	0.75	1.10	2.20	2.20	3.00

The systems are also available with rinsing water fitting, level indicator and switchgear.

4.7 Polymer Preparation and Dosing Systems Ultromat®

4.7.10 Ultromat® Accessories

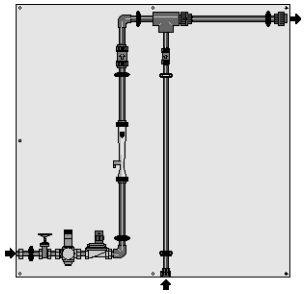

pk_7_030

Ultromat® VS dilution unit

The Ultromat® dilution units are pre-assembled turnkey units for the dilution of polymer solutions, essentially comprising:

1 Water fitting for the dilution water with manual stop tap, pressure release valve, solenoid valve 24 V DC and flow meter float including minimum contact
1 Pipe for the polymer solution to be diluted including non-return valve
1 Static mixer for mixing stock solution with the dilution water

	Use solution	Order no.
VS 1000	1,000 l/h	1021386
VS 2000	2,000 l/h	1021387
VS 5000	5,000 l/h	1021388
VS 10000	10,000 l/h	1021389
VS 20000	20,000 l/h	1021390
VS 30000	30,000 l/h	1021391
VS 50000	50,000 l/h	1021392

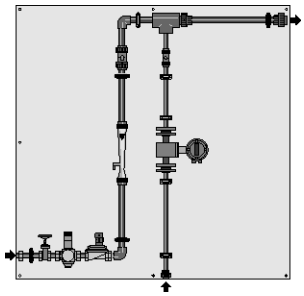

pk_7_031

Ultromat® VS-IP dilution unit with flow meter

The Ultromat® dilution units are pre-assembled turnkey units for the dilution of polymer solutions, essentially comprising:

1 Water fitting for the dilution water with manual stop tap, pressure release valve, solenoid valve 24 V DC and flow meter float including minimum contact
1 Pipe for the polymer solution to be diluted including non-return valve and inductive flow meter
1 Static mixer for mixing stock solution with the dilution water

	Use solution	Order no.
VS 1000 IP	1,000 l/h	1021490
VS 2000 IP	2,000 l/h	1021491
VS 5000 IP	5,000 l/h	1021492
VS 10000 IP	10,000 l/h	1021493
VS 20000 IP	20,000 l/h	1021494
VS 30000 IP	30,000 l/h	1021495
VS 50000 IP	50,000 l/h	1021496

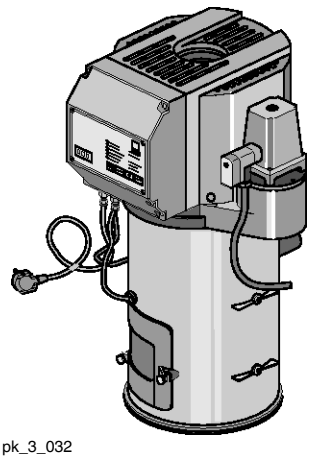

pk_3_032

Ultromat® hopper loader FG 205

The Ultromat® hopper loader 205 acts to refill the dry feeder in the Ultromat® systems with commercially available powdered polymers. With the aid of a suction hose and suction lance the powder is sucked out of the storage container (Big-Bag, powder storage tank) into the powder conveyor and via a flap into the powder feed screw of the polymer diluting station. The powder conveyor is self-operating and simply requires a 230 V DC terminal. External control contacts are not necessary. Depending upon the powder quality, approx. 75-90 kg of powder polymer per hour can be conveyed. The 4 m feed tube and the suction nozzle are included as standard.

	Feed rate	Order no.
Hopper loader FG 205	75 – 90 kg/h	1000664

4.7 Polymer Preparation and Dosing Systems Ultromat®

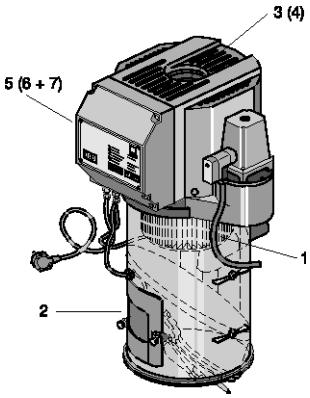

pk_2_105

1 Filter cartridge
2 Filter mat
3 Blower
4 Set of carbon brushes
5 Controller
6 Power pcb
7 Control pcb

Spare parts for the FG 205 hopper loader

	Order no.
Filter cartridge 0.2 m²	1010773
Filter insert	1010774
Fan K 50	1036770
Carbon brushes set	1036771
Controller assembly (consisting of 1010772 + 1010771)	1010770
Circuit board	1010772
Control circuit board	1010771
Carbon brushes set (till 12/08)	1010769

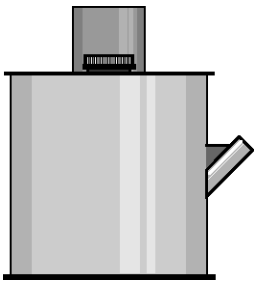

pk_7_033

Powder pre-storage tank

The powder pre-storage tank is used for interim storage of powder polymers that are delivered in big bag packages. The big bag is suspended over the tank on a frame and emptied into the powder pre-storage tank.

	Tank volume	Order no.
Powder pre-storage tank	280 l	1005573

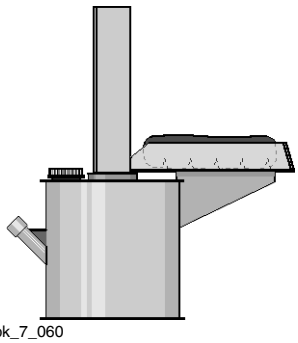

pk_7_060

Powder pre-storage tank with sack tipper

The powder pre-storage tank with sack tipper is used for interim storage of powder polymers that are delivered in 25 kg sacks.

	Tank volume	Order no.
Powder pre-storage tank with sack tipper	280 l	1025137

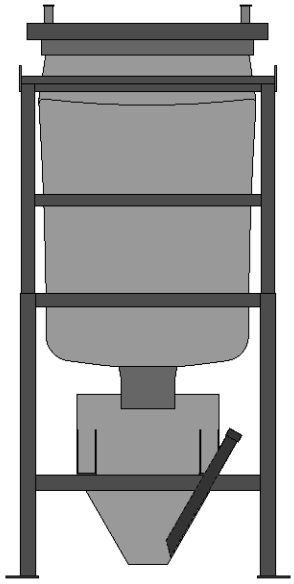

P_UL_0021_SW

Big Bag Emptying Unit

This emptying unit is used to accommodate and empty Big Bags weighing up to 1,000 kg. The Big Bags are suspended in the frame with the aid of a lifting cross bar. The 30-litre powder storage vessel is used to transfer the powder into a feed unit.

The emptying unit comprises the following components:

- Frame 1570 x 1300 x 2540 mm (WxLxH). The height can be adjusted up to 2040 mm
- Suspension cross bar
- Powder storage vessel with powder filling sensor, 30-litre content

	Tank volume	Order no.
Big Bag Emptying Unit	30 l	–

4.8 Application Examples

4.8.1 Proportional Metering of Phosphate

Product:	**DULCODOS® eco**
Feed chemical:	**Phosphate**
Industry:	**Drinking water**
Application:	**Drinking water conditioning**

The liquid phosphate is added to the drinking water proportional to the volume. The flow meter sends impulses to the gamma/ L pump. The metering volume is adjusted by increasing or decreasing the incoming impulses.

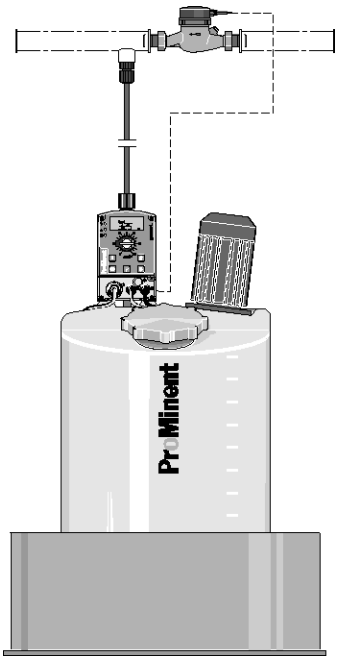

pk_7_093

Tasks and requirements

Metering of phosphate to drinking water to prevent lime deposits and corrosion in the piping

Operating conditions

- Treatment of drinking water
- Fluctuating water demand
- Water temperature between 4 – 30°C

Application information

- Proportional metering of phosphate depending on the water supply
- Control of the metering pump through a contact water meter
- Measure the metering pump capacity during commissioning

Solution

- DULCODOS® eco with 140 litres metering tank and drip pan
- gamma/ L with contact input and pulse control
- Contact water meter

Benefit

- Constant solution concentration even given fluctuating water supply
- Fully-automatic operation with a minimum of staff and maintenance
- Flexible process design thanks to adaptation of the pump to various concentration demands

4.8.2 Inhibitor Metering In Cooling Water

Product: **DULCODOS® panel**
Feed chemical: **Corrosion inhibitor**
Industry: **Process industry**, **Power stations**
Application: **Cooling water conditioning**

The corrosion inhibitor is added to the fresh water in proportion to the volume. The water meter detects the supply water volume and sends the impulses to the gamma/ L pump.

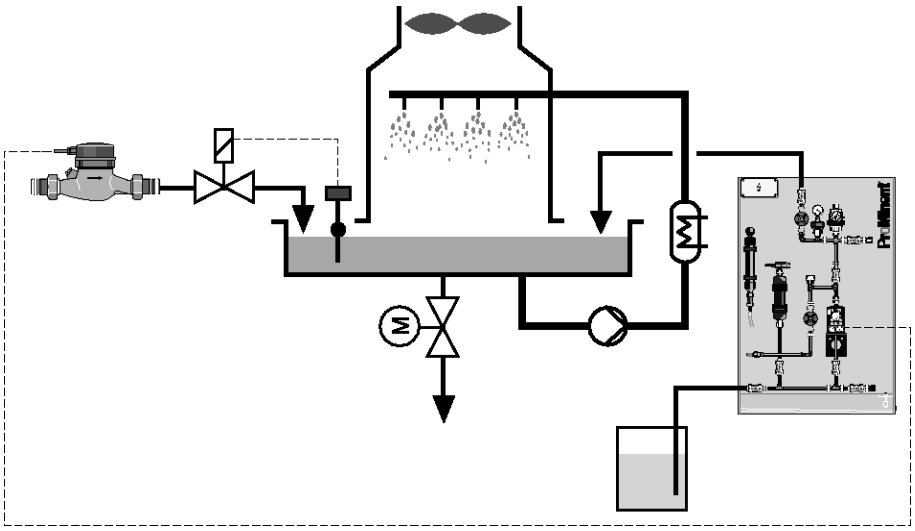

pk_7_060_1

Tasks and requirements

Metering of corrosion inhibitors to the supply water to prevent lime deposits and corrosion in the cooling water circuit.

Operating conditions

- Treatment of flow water
- Fluctuating water demand
- Water temperature between 4 – 20 °C

Application information

- Proportional metering of inhibitor depending on the water supply
- Control of the metering pump through a contact water meter
- Calibrate the metering pump capacity during commissioning

Solution

- DULCODOS® panel including standby pump
- gamma/ L with contact input and pulse control
- Contact water meter

Benefit

- Protection against corrosion in the pipings and the heat exchanger
- Constant solution concentration even given fluctuating water supply
- Fully-automatic operation with a minimum of staff and maintenance
- Flexible process design thanks to adaptation of the pump to various concentration demands

4.8 Application Examples

4.8.3 Inhibitor Metering In Boiler Feed Water

Product: **DULCODOS® Hydrazin**
Feed chemical: **Oxygen binding agent**
Industry: **Process industry**, **power stations**
Application: **Boiser feed water treatment**

The oxygen binding agent is added to the fresh water in proportion to the volume. The water meter detects the supply water volume and sends the impulses to the gamma/ L pump at the hydrazine unit.

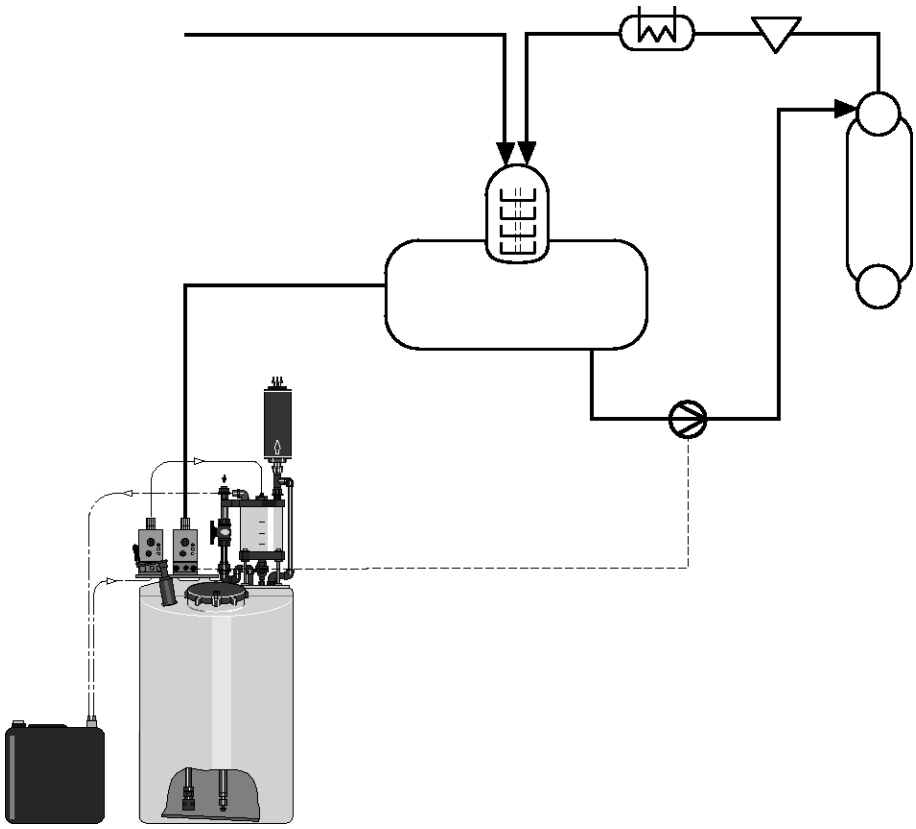

pk_7_095

Tasks and requirements

Metering of oxygen binding agent to the boiler feed water to prevent oxygen corrosion in the boiler area.

Operating conditions

- Fully desalinated drinking water
- Continuous operation

Application information

- Proportional metering of oxygen binding agent depending on the boiler feed water
- The 15 % concentrate is metered to the metering tank with a metering pump tank through a metering unit and diluted with water to produce a 1 % metering solution
- Measure the metering pump capacity during commissioning

Solution

- DULCODOS® Hydrazin with 250 litres metering tank

Benefit

- Semi-automatic operation
- Flexible process design thanks to adaptation of the pump to various concentration demands

4.8 Application Examples

4.8.4 Swimming Pool: pH/Chlorine Metering

Product:	**DULCODOS® Pool**
Feed chemical:	**Acid and sodium hypochlorite**
Industry:	**Swimming pool**
Application:	**Bath water disinfecton**

The pH value and the chlorine concentration are measured and controlled using the D2C controller. The pH value drives the acid pump; the chlorine value drives the sodium hypochlorite pump.

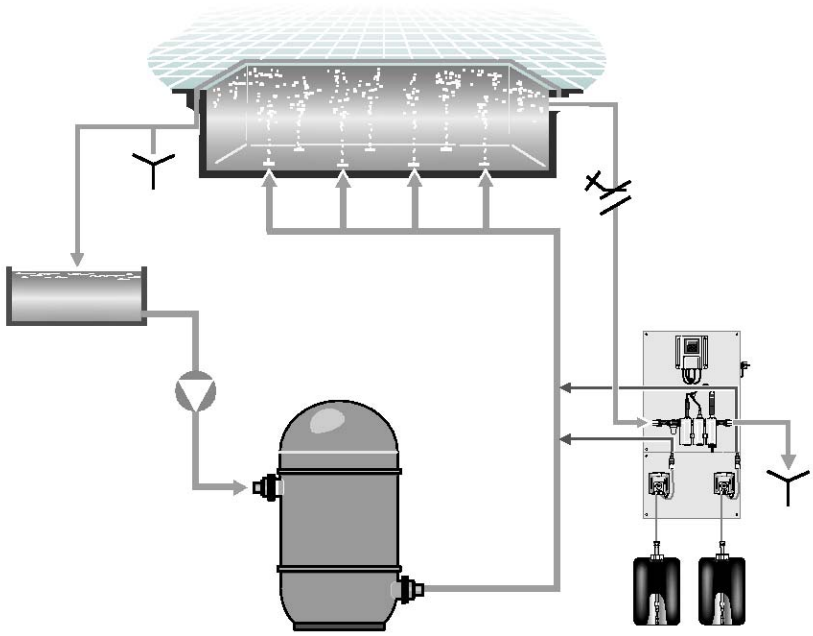

pk_7_096

Tasks and requrements

Disinfection of the swimming pool water with sodium hypochlorite and controlling of the pH value.

Operating conditions

- Quickly changing load conditions
- High ambient temperatures in the control room

Application information

- The chlorine concentration in the pool water should range between 0.3 and 0.6 mg/l
- The pH value is to be adjusted to a pH value between 6.5 and 7.6
- Excessive pH values deteriorate the disinfection effect of the sodium hypochlorite
- Sample water port required (ideal sampling point directly from the pool, approx. 15-20 cm below the water surface)

Solution

- DULCODOS® Pool with 2-channel controller to measure and control the pH value and the chlorine concentration in the swimming pool water

Benefit

- Fully-automatic operation with a minimum of staff and maintenance
- Hygienic water
- High level of process safety

4.8 Application Examples

4.8.5 Sludge Dewatering

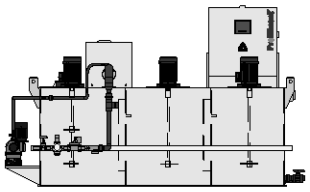

P_UL_0023_SW1

Ultromat® ULFa for powder and liquid polymers

Product:	**Ultromat®**
Feed chemical:	**Polymer solution**
Industry:	**Waste water**
Application:	**Sludge dewatering**

The Ultromat® prepares a 0.2 % polymer solution. The polymer solution is metered to the sludge through the Spectra eccentric screw pump. The centrifuge dewaters the sludge to a dry matter contents of 30 %.

Problems and requirements

Dewatering of sludge by the addition of polymer solution

Operating conditions

- Sludge max. 12 m^3/h with a dry matter content of approx. 3 %
- Temperature up to 60 °C

Notes on use

- The eccentric screw pump Spectra is controlled proportionally to the sludge pump
- Gauge the capacity of the eccentric screw pump during commissioning
- Protect the eccentric screw pump against running dry

Solution

- Ultromat® ULFa 4000 for the preparation of a 0.2 % polymer solution
- Eccentric screw pump of the Spectra 3/3000 FB type

Benefits

- Fully automatic operation with minimum personnel and maintenance requirements
- Flexible process configuration by adapting the pump to different concentration requirements
- Reduction of the sludge disposal costs by achievement of higher dewatering ratios (high dry matter content)

5 Tanks And Transfer Pumps

Contents **Page**

5.0 Overview Of Tanks And Transfer Pumps 1
5.0.1 Product Overview 1
5.0.2 Selection Guide 2

5.1 Dosing Tanks And Collecting Pans PE 3
5.1.1 Dosing Tanks PE 3
5.1.2 Stackable Collecting Pans For Dosing Tanks PE 5
5.1.3 Spare Part Kits 6

5.2 Accessories For Dosing Tanks 7
5.2.1 Fittings And Detachable Parts 7
5.2.2 Stirrers 9

5.3 Storage Tanks PP/PE 11
5.3.1 PE/PP Tanks And Apparatus 11
5.3.2 PE Storage Tank With General WHG Approval 11
5.3.3 PP/PE Storage Tanks, Custom-Built 17
5.3.4 Drip Trays For PE Supply Drums 18
5.3.5 PVC Batch Box 19
5.3.6 Chemical Vapour Lock 19
5.3.7 PP Mounting Rack 19

5.4 Spectra Eccentric Screw Pump 20
5.4.1 Spectra: Transfer Pumps For Polymer Solutions 20
5.4.2 Motor Data 20
5.4.3 Technical Data 21
5.4.4 Spare Parts 21

5.5 von Taine® Centrifugal Pump 22
5.5.1 von Taine® Magnetically Coupled Centrifugal Pumps 22
5.5.2 Spare Parts Kits 26

5.6 Duodos Air Operated Diaphragm Pump 27
5.6.1 Duodos Air Operated Diaphragm Pumps 27
5.6.2 Spare Part Kits 28

5.7 DULCO®Trans Barrel Pump 30
5.7.1 DULCO®Trans Barrel Pumps 30

5.8 DULCO®flex 32
5.8.1 DULCO®flex peristaltic Pump 32
5.8.2 DULCO®flex Peristaltic Pump DFA 33
5.8.3 DULCO®flex Peristaltic Pump DFB 34
5.8.4 DULCO®flex Peristaltic Pump DFC 39
5.8.5 DULCO®flex Peristaltic Pump DFD 45
5.8.6 Spare parts 51

5.9 Application Examples 55
5.9.1 Metering Polymers 55
5.9.2 Filling a Day Tank 56
5.9.3 Filling Day Tanks 57
5.9.4 Deacidification of drinking water 58

5.0 Overview Of Tanks And Transfer Pumps

5.0.1 Product Overview

Tanks



pk_3_052

Dosing Tanks and Collecting Pans

Effective capacity from 35 to 1000 litres.

Tanks and collecting pans made from PE available in matching sizes and different colours.



pk_3_053

Storage Tanks

Effective capacity from 500 litres up to 15 m^3.

Both standardised and customised polyethylene storage tanks and drip trays, also available with general WHG approval.

Transfer Pumps



pk_3_054

Spectra Progressive Cavity Pump

Feed rate range 0.1 – 12,000 l/h, 12 – 3 bar.

Progressive cavity pump for conveying liquid polyelectrolytes in concentrated and diluted form.



pk_3_055

von Taine® Magnetically Coupled Centrifugal Pump

Feed rate range up to 22,500 l/h, delivery head up to 23.5 m water column

Centrifugal pump with magnetic clutch for conveying liquid media. Leak-free transfer from tank to tank. Not self-priming, infeed necessary.



pk_3_056

Duodos Air Operated Diaphragm Pump

Feed rate range: up to 6,700 l/h, 7 bar

Compressed air operated diaphragm pump for conveying liquid media. Run-dry safe and self-priming, no electrical components.



pk_3_057

DULCO®Trans Barrel Pump

Feed rate range: 900 l/h, 2,400 l/h, 3,750 l/h

Barrel pump for filling, discharging and refilling liquids from canisters, drums and containers.

5.0 Overview Of Tanks And Transfer Pumps



P_DX_0029_C

DULCO®flex

Capacity range: 17 - 38,000 l/h, 2 - 15 bar

Peristaltic pumps for low, medium and high feed rates. Key features include their simple operation and compact, robust design.

5.0.2 Selection Guide

Selection Guide - Tanks:

	Shape	WHG approval	Effective volume
Dosing Tanks PE	Cylindrical	–	35 - 1,000 l
PE Storage Tank With General WHG Approval	Cylindrical	x	500 - 25,000 l
PP/PE Storage Tanks, Custom-Built	Cylindrical or rectangular	–	500 - 25,000 l

Selection Guide - Transfer Pumps:

Pump type	Priming	Drive	Output range
Spectra progressive cavity pump	Self-priming	Electric	0.1 - 12,000 l/h
von Taine® Magnetically Coupled Centrifugal Pump	Not self-priming (infeed necessary)	Electric	Up to 22,500 l/h
Duodos air operated diaphragm pump	Self-priming	Compressed air	Up to 6,700 l/h, 7 bar
DULCO®Trans Barrel Pump	Self-priming	Electric	900 - 3,750 l/h

Selection Guide - Peristaltic Pumps

Pump type	Priming	Drive	Output range
Peristaltic Pump DULCO®flex	Self-priming	Electric	max. 17 - 38,000 l/h 15 bar

5.1 Dosing Tanks And Collecting Pans PE

5.1.1 Dosing Tanks PE

Made of UV-stabilised polyethylene with scale for litres and US gallons and screw cap (35 l drum with push cap) integral sintered threaded bushes for the assembly of Prominent® electronic metering pumps, mounting flange with integral sintered threaded bushes for manual or electric stirrers. All tanks designed for extreme robustness with ProMinent® logo and 3 lateral flats for mounting drum.

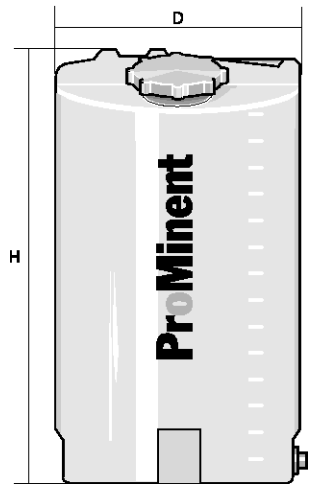

pk_3_0001_1a

Natural coloured/transparent PE dosing tank

Usable capacity l	D mm	H mm	Threaded bush for the dosing pumps	Weight empty kg	Order no.
35	350	485	without threaded bushes	3.5	791993
60	410	590	gamma/ L, D_4a	5.0	791994
100	500	760	alpha, Beta®, gamma/ L, D_4a	7.0	1001490
140	500	860	alpha, Beta®, gamma/ L, D_4a	9.5	791995
250	650	1,100	alpha, Beta®, gamma/ L, D_4a, Sigma/ 1/ 2/ 3, delta®	17.5	1023175
500	820	1,190	2 x gamma/ L, 2 x D_4a, 2 x Sigma/ 1, delta®	24.5	791997
1,000	1,070	1,260	2 x gamma/ L, 2 x D_4a, 2 x Sigma/ 1/ 2/ 3, delta®	51.0	1010909

Natural coloured/transparent PE dosing tank

prepared for the installation of a hand operated or electronic stirrer.

Usable capacity l	with an opening for	Order no.
60	A hand operated stirrer	792104
60	An electric stirrer	792105
100	A hand operated stirrer	1002034
100	An electric stirrer	1002033
140	A hand operated stirrer	792106
140	An electric stirrer	792107
250	A hand operated stirrer	792108
250	An electric stirrer	792109
500	A hand operated stirrer	792110
500	An electric stirrer	792111
1,000	A hand operated stirrer	1010910
1,000	An electric stirrer	1010911

A threaded socket R 3/4″ is cast into the tanks of 35-1,000 litres for emptying purposes, which can be drilled out to a Ø of 10 mm should the customer require this. A sealing plug made out of PE R 3/4″ fitted with a seal can be screwed in (accessory order number 200692).

Metering tanks without ProMinent® logo are available on request.

5.1 Dosing Tanks And Collecting Pans PE

Made of UV-stabilised polyethylene with scale for litres and US gallons and screw cap (35 l drum with push cap) integral sintered threaded bushes for the assembly of Prominent® electronic metering pumps, mounting flange with integral sintered threaded bushes for manual or electric stirrers. All tanks designed for extreme robustness with ProMinent® logo and 3 lateral flats for mounting drum.

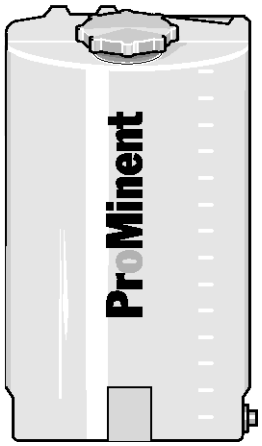

pk_3_001_1

Black PE dosing tank

For light sensitive media.

Usable capacity l	Order no.
35	791998
60	791999
100	1001322
140	792000
250	1023176
500	792002
1,000	1010912

Blue PE dosing tank

Usable capacity l	Order no.
35	1003812
60	1003813
100	1003814
140	1003815
250	1023177
500	1003817
1,000	1010913

Yellow PE dosing tank

Usable capacity l	Order no.
35	1003818
60	1003819
100	1003820
140	1003821
250	1023178
500	1003823
1,000	1010914

Red PE dosing tank

Usable capacity l	Order no.
35	1003824
60	1003825
100	1003826
140	1003827
250	1023179
500	1003829
1,000	1010915

Metering tanks without ProMinent® logo are available on request.

5.1 Dosing Tanks And Collecting Pans PE

5.1.2 Stackable Collecting Pans For Dosing Tanks PE

Made of UV stabilised polyethylene, stackable, with ProMinent® logo. Incorporating 2 lateral flats for mounting collecting pan.

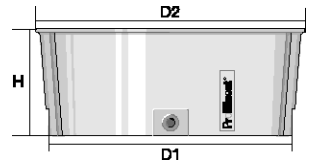

pk_3_019

PE colourless/transparent stackable collecting pans

Usable capacity	Material	D2	D1	H	Order no.
l		mm	mm	mm	
35	PE	565	507	220	1010879
60	PE	680	607	270	1010880
100	PE	802	727	320	1010881
140	PE	811	727	370	1010882
250	PE	917	807	520	1010883
500	PE	1,155	1,009	670	1010884

PE black stackable collecting pans

Usable capacity	Material	D2	D1	H	Order no.
l		mm	mm	mm	
35	PE	565	507	220	1010885
60	PE	680	607	270	1010886
100	PE	802	727	320	1010887
140	PE	811	727	370	1010888
250	PE	917	807	520	1010889
500	PE	1,155	1,009	670	1010890

PE blue stackable collecting pans

Usable capacity	Material	D2	D1	H	Order no.
l		mm	mm	mm	
35	PE	565	507	220	1010891
60	PE	680	607	270	1010892
100	PE	802	727	320	1010893
140	PE	811	727	370	1010894
250	PE	917	807	520	1010895
500	PE	1,155	1,009	670	1010896

PE yellow stackable collecting pans

Usable capacity	Material	D2	D1	H	Order no.
l		mm	mm	mm	
35	PE	565	507	220	1010897
60	PE	680	607	270	1010898
100	PE	802	727	320	1010899
140	PE	811	727	370	1010900
250	PE	917	807	520	1010901
500	PE	1,155	1,009	670	1010902

5.1 Dosing Tanks And Collecting Pans PE

PE red stackable collecting pans

Usable capacity	Material	D2	D1	H	Order no.
l		mm	mm	mm	
35	PE	565	507	220	1010903
60	PE	680	607	270	1010904
100	PE	802	727	320	1010905
140	PE	811	727	370	1010906
250	PE	917	807	520	1010907
500	PE	1,155	1,009	670	1010908

For discharge purposes, an R 3/4" threaded socket is already moulded on to the 35-500 l drip trays. The customer can drill out the threaded socket to 10 mm Ø if necessary. A sealing plug made out of PE R 3/4" fitted with a seal can be screwed in (accessory order number 200692).

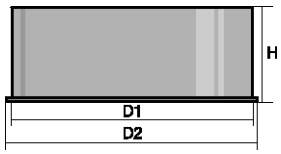

pk_3_018a

PE natural and black collecting pans

Usable capacity	Material	D2	D1	H	Order no.
l		mm	mm	mm	
1,000	PE-black	1,280	1,200	980	740726
1,000	PE-natural	1,280	1,200	980	740719

5.1.3 Spare Part Kits

	Order no.
Push cap for 35 l tank	740708
Screw cap with seals for 60/100/140/250	740715
Screw cap with seals for 500/1000	740718
Sealing plugs with 3/4" seals PE	200692

5.2 Accessories For Dosing Tanks

5.2.1 Fittings And Detachable Parts

Attachment of pumps to dosing tanks

PP mounting plate

for mounting metering pumps onto dosing tanks (including screws for attachment of mounting plates to the dosing tank).

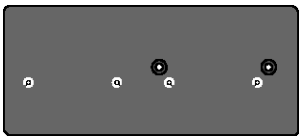

pk_3_003

	Order no.
Mounting plate, Sigma/ 1/ 2/ 3	740476
Mounting plate, alpha	790850
Mounting plate, Sigma/ 1, EXtronic®	801569
Mounting plate, EXtronic®	801573
Mounting plate, Beta®, gamma/ L, D_4a	801575
Mounting plate, 3 x gamma/ L, 3 x Beta®	801580
Mounting plate, 2 x gamma/ L, 2 x Beta®	801583

The order no. for the mounting plates can be found in the table below.

	Dosing tank						
Metering pumps	**35 l**	**60 l**	**100 l**	**140 l**	**250 l**	**500 l**	**1000 l**
alpha	790850	790850	x	x	x	790850	790850
Beta®	801575	x	x	x	x	2x	2x
gamma/ L	801575	x	x	x	x	2x	2x
D_4a	801575	x	x	x	x	2x	2x
EXtronic®	-	801569	801569	801569	801573	801573	801569
Sigma/ 1	-	801569	740476	740476	x	2x	2x
Sigma/ 2	-	-	-	-	x	740476	2x
Sigma/ 3	-	-	-	-	x	740476	2x
2 x Beta® or 2 x gamma/ L	-	801583	801583	801583	801583	2x801583	2x801583
3 x Beta® or 3x gamma/ L	-	-	801580	801580	801580	2x801580	2x801580

- x = Pump mounted directly onto a tank
- 2x = 2 pumps mounted directly onto a tank (only 500 and 1000 litre)
- - = pump cannot be installed onto the tank

Tank connectors with PE plugs

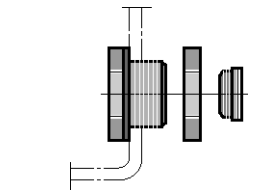

pk_3_004

	Order no.
R 3/4" as an additional connection for dosing tanks PE 35-1000 l	809756
R 1/2" as an additional connection for dosing tanks PE 35-1000 l	809755

PP discharge tap

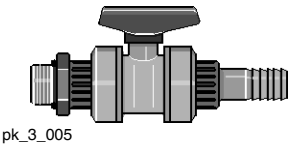

pk_3_005

	Order no.
For dosing tanks with d 20, Ø 20 mm hose nozzle and 3/4'' nipple for direct connection to the threaded connector on the tank.	809714

PVC discharge tap

	Order no.
For dosing tanks with d 16, Ø 16 mm hose nozzle and 3/4'' nipple for direct connection to the threaded connector on the tank	809745

5.2 Accessories For Dosing Tanks

Screw cap lock

	Order no.
Lock with key for screw cap	200683

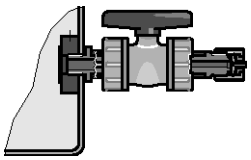

pk_3_006

PP Tank connector with strainer

A laboratory ball tap and hose connector made of PP for connecting the dosing pump at the base of the dosing tank.

A hole with a Ø of 17 mm is required on the construction side.

Material	oØ x iØ mm	Order no.
PP	6 x 4	809947
PP	8 x 5	809948
PP	10 x 4	1002933
PP	12 x 9	809949
PP	12 x 6	809950

PVC Tank connector with strainer

Material	oØ x iØ mm	Order no.
PVC	6 x 4	814566
PVC	8 x 5	814567
PVC	10 x 4	1002934
PVC	12 x 9	814568
PVC	12 x 6	814569

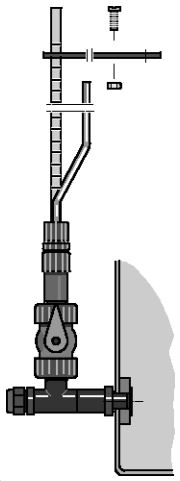

pk_1_091

PVC Calibration assembly

For checking the dosing volumes and indicating the liquid level; with a graduated measuring tube having 1 ml graduations, a foot valve, a multi-way valve and the necessary fittings. (Specific information should be given when ordering when there are differing hose and tank sizes).

Suction pipe Ø mm	Tank contents Litres	Order no.
6	35, 60	914740
8	60	914741
8	100, 140	914742
12	250	914743
12	500, 1,000	914744

5.2 Accessories For Dosing Tanks

5.2.2 Stirrers

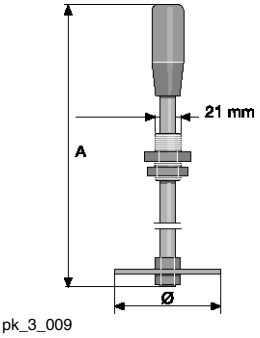

pk_3_009

PP Hand mixer

completely assembled.

	A mm	Ø mm	Order no.
for tanks 35 and 60 l	515	90	741118
for tanks 100 and 140 l	715	90	741119
for tanks 250 and 500 l	1,040	130	741120

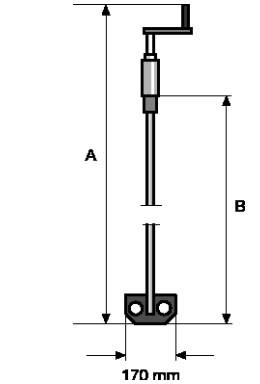

pk_3_007

PP Hand stirrer

with crank, completely assembled

	A mm	B mm	Order no.
for tank 60 l	670	465	914701
for tank 100 l	855	650	914738
for tank 140 l	965	765	914702
for tank 250 and 500 l	1,175	965	914703
for tank 1000 l	1,240	1,040	914705

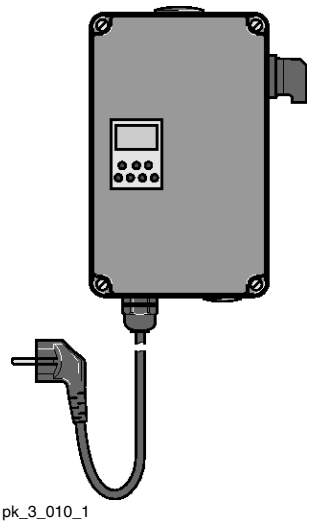
pk_3_010_1

Timer with digital clock

	Order no.
In plastic housing for the control of a stirrer or a metering pump, 230 V, 50 Hz, max. 6A, IP 65. Day and week programs, shortest switching time 1 min. with 2 m power cable and euro plug.	1005561

Agitators are to be operated only via the motor protection switch!

5.2 Accessories For Dosing Tanks

Stainless steel electric stirrer

For batching and mixing of liquids of up to max. 500 mPas viscosity. Intermittent operation via time switch clock recommended.

Wide range voltage motor with 1400 rpm, insulation class F, suitable for tropic, stainless steel 1.4571 shaft, polypropylene (PP) turbine or PVDF for 1000 l.

The 0.02-0.25 kW motors run on a single-phase 230 V/50-60 Hz AC supply.

The 0.75 kW motor runs on a three-phase 380-415 V/50-60 Hz AC supply.

A motor safety switch is to be fitted on site for all motors.

Not suitable for gas-emitting media.

	El. connection	Enclosure rating	Order no.
for tank 60 l	20 W/230 V/0.38 A	IP55	818576
for tank 100 l	180 W/230 V/1.40 A	IP55	1001566
for tank 140 l	180 W/230 V/1.40 A	IP55	791502
for tank 250 l	180 W/230 V/1.40 A	IP55	791503
for tank 500 l	250 W/230 V/1.80 A	IP55	791504
for tank 1000 l	750 W/400 V/2.00 A	IP55	791458

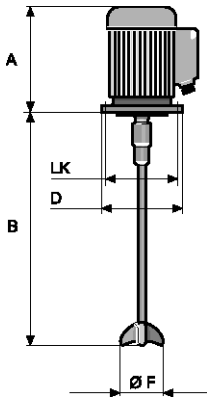

pk_3_008

Size	A	B	Ø D	Ø LK	Ø F
60	195	490	115	100	70
100	200	675	160	130	70
140	200	780	160	130	70
250	200	950	160	130	70
500	200	950	160	130	70
1000	230	1190	200	165	130

Chemical resistant electric stirrer

Extended range motor, speed 1400 rpm, insulation class F, insulated for tropics, stainless steel shaft with PVDF coating, hard PP agitator blades.

The 0.02-0.25 kW motors run on a single-phase 230 V/50-60 Hz AC supply.

The 0.75 kW motor runs on a three-phase 380-415 V/50-60 Hz AC supply.

A motor safety switch is to be fitted on site for all motors.

Not suitable for gas-emitting media.

	El. connection	Enclosure rating	Order no.
for tank 60 l	20 W/230 V/0.38 A	IP55	818577
for tank 100 l	180 W/230 V/1.40 A	IP55	1002035
for tank 140 l	180 W/230 V/1.40 A	IP55	791454
for tank 250 l	180 W/230 V/1.40 A	IP55	791455
for tank 500 l	250 W/230 V/1.80 A	IP55	791456
for tank 1000 l	750 W/400 V/2.00 A	IP55	791457

5.3 Storage Tanks PP/PE

5.3.1 PE/PP Tanks And Apparatus

Plastic tanks are indispensable in today's system technology. That's one reason why we have expanded our product range in terms of welded tanks and apparatus produced from thermoplastics; polyethylene (PE) and polypropylene (PP). These technologically proven materials have high resistance to an extremely wide range of chemicals and can be processed in extremely flexible ways making them ideal for a wide spectrum of applications.

- Waste water technology
- Electroplating
- Storage, including chemicals which cannot come into contact with water
- Exhaust air treatment
- Domestic technology
- Drinking and process water treatment
- Swimming pool technology, etc.

5.3.2 PE Storage Tank With General WHG Approval

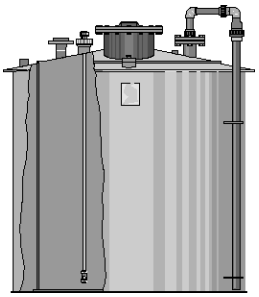

pk_3_014

The storage of chemicals which cannot come into contact with water (Water Hazard Class WGK 0-3) stipulates strict official conditions.

We supply tanks in accordance with German WHG §19 l admission suitable for internal and outdoor locations. The tanks are available complete with monitoring accessories, level control unit, filling facility, heating, discharge and metering facility up to a storage volume of 12 m^3 as standard and up to 50 m^3 on request.

Storage tanks PE-HD

- Approval mark Z-40.21-229 in accordance with WHG §19 (Water Resource Management Law)
- Design and manufacture carried out in accordance with the construction and test principles of the DIBT (German Institute of Building Technology)
- For atmospheric pressure operation up to a max. operating temperature of 30 °C
- Material polyethylene PE-HD
- For indoor or outdoor installation
- For chemicals in accordance with DIBT media list

Usable volume 95 % fill level	Internal diameter	External diameter	Height of cylindrical section	Overall height	Weight empty
l	mm	mm	mm	mm	kg
500	800	860	1,050	1,300	50
750	1,000	1,060	1,050	1,300	60
1,000	1,000	1,060	1,350	1,600	70
1,250	1,200	1,260	1,150	1,400	80
1,500	1,200	1,260	1,400	1,650	90
2,000	1,400	1,480	1,400	1,650	100
2,500	1,400	1,480	1,700	1,950	130
3,000	1,600	1,680	1,550	1,800	170
3,500	1,700	1,780	1,550	1,800	190
4,000	1,700	1,780	1,850	2,100	220
5,000	1,900	1,980	1,850	2,100	280
6,000	2,000	2,080	1,950	2,250	350
7,000	2,150	2,250	1,950	2,250	400
8,000	2,150	2,250	2,250	2,550	500
10,000	2,150	2,250	2,900	3,200	600
12,000	2,150	2,250	3,400	3,700	700

Other tank sizes and dimensions and prices available on request.

5.3 Storage Tanks PP/PE

Collecting Pans PE-HD

Usable volume 95 % fill level	Internal diameter	External diameter	Height of cylindrical section	Overall height	Weight empty
l	mm	mm	mm	mm	kg
500	1,050	1,150	1,030	1,050	40
750	1,250	1,350	1,030	1,050	45
1,000	1,250	1,350	1,280	1,300	50
1,250	1,450	1,550	1,080	1,100	55
1,500	1,450	1,550	1,330	1,350	60
2,000	1,650	1,750	1,280	1,300	70
2,500	1,650	1,750	1,600	1,620	90
3,000	1,850	1,950	1,470	1,500	105
3,500	1,950	2,050	1,470	1,500	120
4,000	1,950	2,050	1,750	1,780	140
5,000	2,150	2,250	1,750	1,780	160
6,000	2,250	2,350	1,900	1,950	200
7,000	2,390	2,490	1,910	1,960	220
8,000	2,390	2,490	2,200	2,250	270
10,000	2,390	2,490	2,750	2,800	350
12,000	2,390	2,490	3,300	3,350	450

Other tank sizes and dimensions and prices available on request.

5.3 Storage Tanks PP/PE

Standard equipment of our storage tanks and collecting pans with approval marks

for indoor or outdoor installation; other internal fittings/accessories on request.

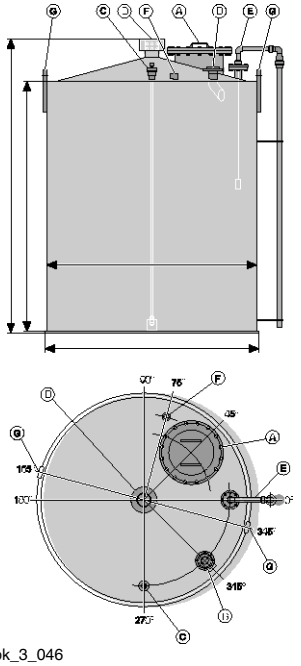

pk_3_046

Item	Quantity	Name	500 l - 1,250 l	1,500 l - 2,000 l	2,500 l - 3,500 l	4,000 l - 12,000 l
A	1	Handhole/manhole, bolted 1.4301	DN 250	DN 250	DN 500	DN 500
B	1	Filling connection with 45° inlet elbow	DN 32	DN 50	DN 50	DN 50
C	1	Sampling pipe PVC/EPDM	DN 15	DN 15	DN 15	DN 20
D	1	Vent pipe with dome	DN 80	DN 100	DN 100	DN 100
E	1	Cable-operated level indicator	DN 80/40	DN 80/40	DN 80/40	DN 80/40
F	1	Screwed socket for overfill protection	Rp 2“	Rp 2“	Rp 2“	Rp 2“
G	2	Crane lifting eye	-	yes	yes	yes

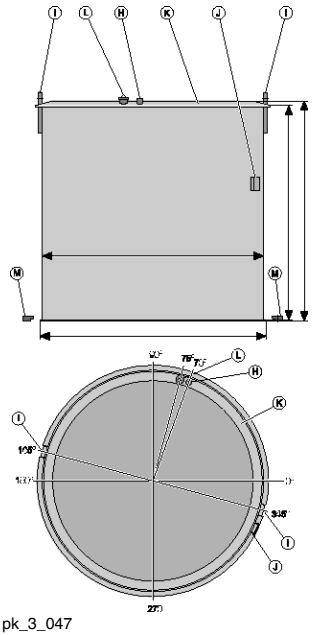

pk_3_047

Collecting pans for external installation

Item	Quantity	Name	500 l - 1,250 l	1,500 l - 12,000 l
H	1	Leakage sensor support	Rp 2“	Rp 2“
I	2	Crane lifting eye	-	yes
J	1	Rating plate	yes	yes
K	1	Rain collar	yes	yes
L	1	Inspection port	yes	yes
M	1	Floor claw set	yes	yes

Collecting pans for installation

Item	Quantity	Name	500 l - 1,250 l	1,500 l - 12,000 l
H	1	Leakage sensor support	Rp 2“	Rp 2“
I	2	Crane lifting eye	-	yes
J	1	Rating plate	yes	yes

5.3 Storage Tanks PP/PE

Accessories Meeting The Requirements Of WHG § 19 and VAwS (Directive On Systems For Storage And Handling Of Water-Endangering Substances)



pk_3_037

Overfill protection with approval mark

Level detector T200 with float as max. level limit switch, without downstream transmitter, see below. Length 500 mm.

	Order no.
Overfill protection with approval mark	1009334



pk_3_038

Leakage sensor with approval mark

Leakage detection system T200 consisting of level detector with float, without downstream transmitter, see below. Length 3,000 mm.

	Order no.
Leakage sensor with approval mark	1009340

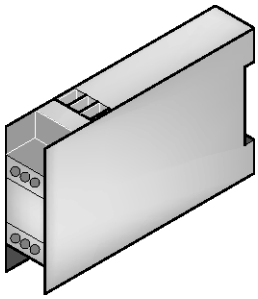

pk_3_040

Transmitter with approval mark

For installation in control cabinets by others, suitable for leakage and overfill protection.

	Order no.
Transmitter with approval mark	1009348

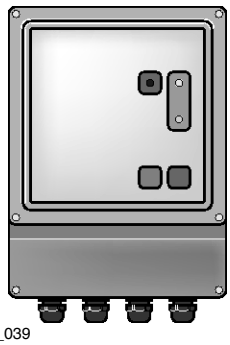

pk_3_039

Alarm indicator unit

For overfill protection and leakage sensor with approval mark, complete with signal horn and two transmitters.

Price on request.

5.3 Storage Tanks PP/PE

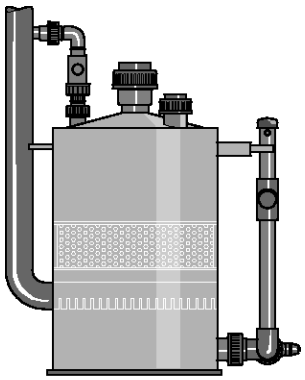

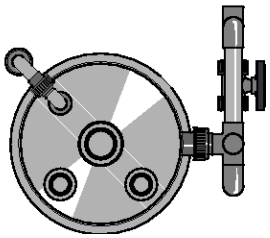

pk_3_041

Absorption vessel

For ventilation of sealed storage tanks.

Material: polyethylene PE-HD complete with connections, ball valve PVC/EPDM and fixed pipework to storage tank; sizes and prices according to tank volume and stored medium.

Price on request.

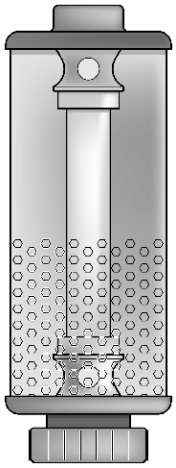

pk_3_042

Acid vapour separator

Size and combining agent according to tank volume and stored medium.

Price on request.

5.3 Storage Tanks PP/PE

Other Accessories

Chemical filling station

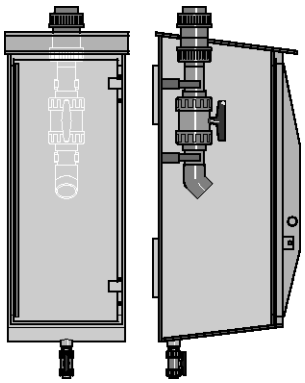

pk_3_043

Suitable for third-party wall mounting.

Material: polyethylene PE-HD.

Size: approx. 420x420x1000 mm (LxWxH), complete with ball valve DN 50 PVC/EPDM, threaded connector DN 50 and drip tray with ball valve DN 25

PVC/EPDM connection: Rp 20 (parallel female thread)

Other internal fittings such as tanker couplings, automatic valves, heating, etc. are possible; prices on request.

Bistable changeover contact

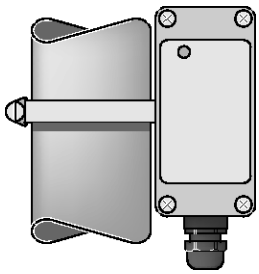

pk_3_044

With approval mark for fitting on cable-operated level indicator.

	Order no.
Bistable changeover contact	1009349

Storage tank heating

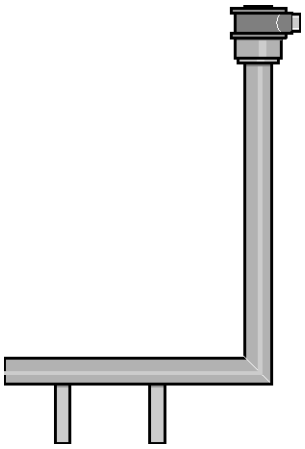

pk_3_045

With temperature and level control for run-dry protection; on request, according to stored medium and tank volume.

Optional in addition to insulation of the storage tank.

Price on request.

5.3 Storage Tanks PP/PE

5.3.3 PP/PE Storage Tanks, Custom-Built

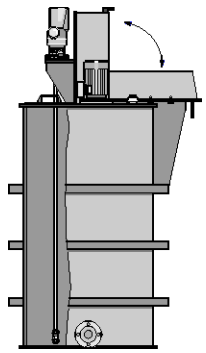

pk_3_015

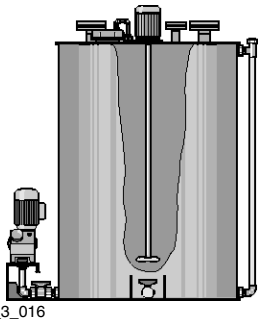

pk_3_016

Very often, space considerations or system requirements prevent the use of conventional dosing containers.

In many cases space constraints or system-specific requirements prevent the use of ready-made dosing containers.

With welded PE/PP tanks we can solve this problem. A tank can be optimally adapted to your specific requirements.

In addition, system installations and appliances such as salt-dissolving baskets, sack-pouring equipment, adsorption containers, angled and hopper bases can be added to improve or enhance the tank functions.

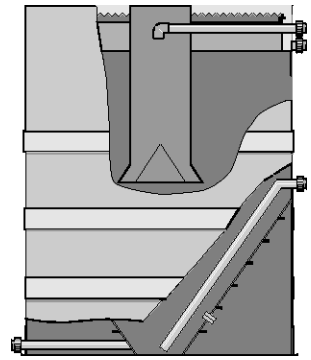

pk_3_017

Circular tanks

- Material polyethylene PE-HD or polypropylene PP
- Base design, flat base, tapered base, sloping base
- Roof design, flat roof, tapered roof or open, suitable for atmospheric pressure operation at operating temperatures up to 80 °C
- Standard equipment: 2 crane lifting eyes on circular tanks with usable volumes above 2000 litres
- Prices on request according to application

Usable volume 95 % fill level	Internal diameter	External diameter	Height of cylindrical section	Overall height
l	mm	mm	mm	mm
500	800	860	1,050	1,070
750	1,000	1,060	1,050	1,070
1,000	1,000	1,060	1,350	1,370
1,250	1,200	1,260	1,150	1,170
1,500	1,200	1,260	1,400	1,425
2,000	1,400	1,480	1,400	1,425
2,500	1,400	1,480	1,700	1,730
3,000	1,600	1,680	1,550	1,580
3,500	1,700	1,780	1,550	1,580
4,000	1,700	1,780	1,850	1,880
5,000	1,900	1,980	1,850	1,880
6,000	2,000	2,080	1,950	1,980
7,000	2,150	2,250	1,950	1,990
8,000	2,150	2,250	2,250	2,290
10,000	2,150	2,250	2,900	2,950
12,000	2,150	2,250	3,400	3,450

Other tank sizes up to 25 m^3 and dimensions available on request.

5.3 Storage Tanks PP/PE

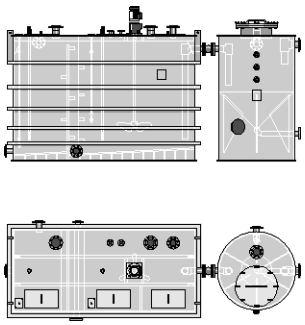

pk_3_048

Rectangular tanks

- Material polyethylene PE-HD or polypropylene PP
- Base design, flat base or sloping base, full-face contact with foundation
- Roof design, flat roof or open, suitable for atmospheric pressure operation at operating temperatures up to 80 °C
- Surrounding steel tube reinforcement, PE or PP coated
- Standard equipment: 4 crane lifting eyes on rectangular tanks with usable volumes above 2000 litres.
- Prices on request according to application

Usable volume 95 % fill level	Internal dimensions (L x W x H)	External dimensions (L x W x H)
l	mm	mm
500	950 x 750 x 750	1,100 x 900 x 770
750	1,000 x 1,000 x 800	1,150 x 1,150 x 820
1,000	1,000 x 1,000 x 1,060	1,150 x 1,150 x 1,080
1,250	1,250 x 1,000 x 1,060	1,400 x 1,150 x 1,080
1,500	1,500 x 1,000 x 1,060	1,750 x 1,250 x 1,090
2,000	1,500 x 1,250 x 1,130	1,750 x 1,500 x 1,160
2,500	1,750 x 1,250 x 1,210	2,000 x 1,500 x 1,240
3,000	1,750 x 1,250 x 1,450	2,000 x 1,500 x 1,480
3,500	1,750 x 1,500 x 1,410	2,000 x 1,750 x 1,440
4,000	2,000 x 1,500 x 1,410	2,250 x 1,750 x 1,440
5,000	2,500 x 1,500 x 1,410	2,750 x 1,750 x 1,440
6,000	2,500 x 1,750 x 1,450	2,750 x 2,000 x 1,480
7,000	2,500 x 1,750 x 1,700	2,750 x 2,000 x 1,730
8,000	2,500 x 2,000 x 1,700	2,750 x 2,250 x 1,730
10,000	3,000 x 2,000 x 1,760	3,350 x 2,350 x 1,800
12,000	3,500 x 2,000 x 1,810	3,850 x 2,350 x 1,850
15,000	4,000 x 2,000 x 2,000	4,350 x 2,350 x 2,050

Other tank sizes up to 25 m^3 and dimensions available on request

5.3.4 Drip Trays For PE Supply Drums

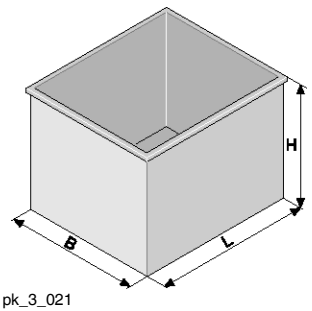

pk_3_021

Usable capacity	Material	External dimensions (L x W x H)	Internal dimensions (L x W x H)	Order no.
l		mm	mm	
40	PE black	500 x 400 x 266	450 x 350 x 260	791726
70	PE black	500 x 430 x 378	470 x 400 x 370	740309

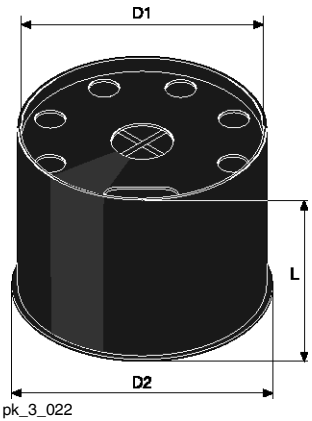

pk_3_022

Usable capacity	Material	D2	D1	L	Order no.
l		mm	mm	mm	
250	PE-neutral	840	800	508	791727

5.3 Storage Tanks PP/PE

5.3.5 PVC Batch Box

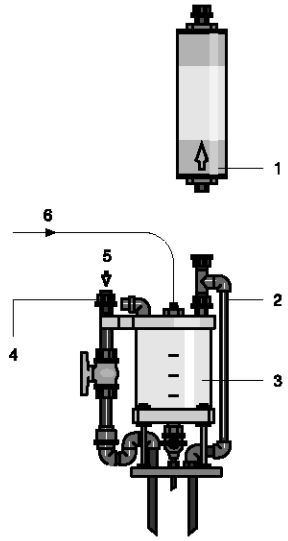

pk_3_023

1 Active carbon filter
2 Venting line
3 Batch box
4 Gas displacement tubing
5 Water intake
6 Fluid concentrate

For metering solutions of concentrated fluids e. g. hydrazine, ammonia, caustic soda etc. The batch box is designed for attachment to our 140 and 250/500 litre dosing tanks.

Batch Box	Usable capacity l	Tanks	Order no.
Disposable drums	2	140 l	1020438
Disposable drums	5	250/500 l	1020441
Reusable drums	2	140 l	1020443
Reusable drums	5	250/500 l	1020455

	Order no.
Active carbon filter with bracket	1020442

5.3.6 Chemical Vapour Lock

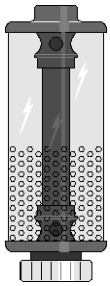

pk_3_024

Compact chemical vapour lock with screw attachment for installation on a gas-tight storage tank. The chemical vapour lock is filled with the binder Cosa C and is ideal for the storage of aluminium chloride, ferric chloride, ferrous chloride, potassium hypochlorite, sodium hypochlorite and hydrochloric acid up to a maximum of 30%. The lifetimes of the binder should be noted. Other chemicals and concentrations are available on request.

	Usable capacity l	Exhaust air, max. l/min	DN	Order no.
SDA-90	0.8	25	DN 25	1020457
SDA-160	7.0	158	DN 65	1020458

5.3.7 PP Mounting Rack

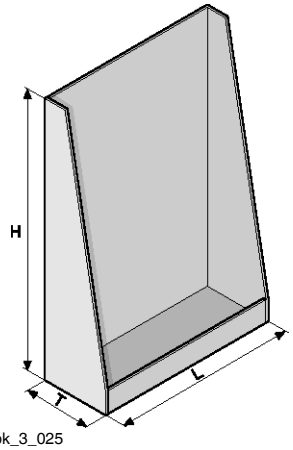

pk_3_025

with integrated drip tray for mounting metering station.

Dimensions H x W x D mm	Order no.
1,200 x 800 x 300	1008779
1,200 x 800 x 400	1008780

5.4 Spectra Eccentric Screw Pump

5.4.1 Spectra: Transfer Pumps For Polymer Solutions

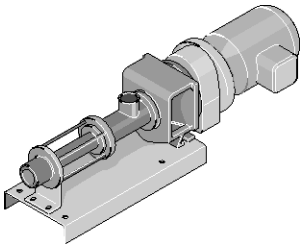

pk_3_032

Spectra eccentric screw pumps were designed for the metering of polymer solutions. Stators made of FPM, rotors made of stainless steel (Cr Ni Mo 17-12-2) and axial face seals reduce maintenance work and can still be used even if oleiferous polymer solutions are metered.

The pumps are available in the following versions:

- Spectra for frequency converter operation with external fan

Spectra for frequency converter operation with external fan

without base plate

	Delivery rate at 3 bar	Maximum back pressure bar	Power Uptake kW	Order no.
Spectra 12/2 F	0.1…2.4 l/h	12	0.37	1025284
Spectra 12/13 F	0.6…13.2 l/h	12	0.37	1025285
Spectra 12/33 F	2.4…33.0 l/h	12	0.37	1025286
Spectra 12/100 F	5.0…100.0 l/h	12	0.37	1025287
Spectra 6/300 F	20.0…300.0 l/h	6	0.37	1025288
Spectra 6/650 F	40.0…650.0 l/h	6	0.55	1025289
Spectra 5/1400 F	50.0…1,400.0 l/h	5	0.75	1025290
Spectra 3/3000 F	100.0…3,000.0 l/h	3	0.75	1025291
Spectra 3/6500 F	100.0…6,500.0 l/h	3	1.50	1025292
Spectra 3/12000 F	400.0…12,000.0 l/h	3	2.20	1025293

with base plate

	Delivery rate at 3 bar	Maximum back pressure bar	Power Uptake kW	Order no.
Spectra 12/2 FB	0.1…2.4 l/h	12	0.37	1025294
Spectra 12/13 FB	0.6…13.2 l/h	12	0.37	1025295
Spectra 12/33 FB	2.4…33.0 l/h	12	0.37	1025296
Spectra 12/100 FB	5.0…100.0 l/h	12	0.37	1025297
Spectra 6/300 FB	20.0…300.0 l/h	6	0.37	1025298
Spectra 6/650 FB	40.0…650.0 l/h	6	0.55	1025299
Spectra 5/1400 FB	50.0…1,400.0 l/h	5	0.75	1025300
Spectra 3/3000 FB	100.0…3,000.0 l/h	3	0.75	1025301
Spectra 3/6500 FB	100.0…6,500.0 l/h	3	1.50	1025302
Spectra 3/12000 FB	400.0…12,000.0 l/h	3	2.20	1025303

The frequency converters are not included in the standard delivery.

Frequency converters for Spectra

		recommended for pumps up to	Order no.
SK500E - 550	0.55 kW, 1 ph, 230 V, incl. control panel	0.37 kW	1010980
SK500E - 750	0.75 kW, 1 ph, 230 V, incl. control panel	0.55 kW	1010981
SK500E - 111	1.10 kW, 1 ph, 230 V, incl. control panel	0.75 kW	1025304
SK500E - 151	1.50 kW, 1 ph, 230 V, incl. control panel	1.10 kW	1010982
SK500E - 221	2.20 kW, 3 ph, 400 V, incl. control panel	2.20 kW	1025305

5.4.2 Motor Data

Type	Phases (el. connection)		Frequency	Enclosure rating		
Type F	3 ph	400	50	IP 55	3 PTC thermistors in winding	external fan: 1~, 230 VAC, 50 Hz

5.4 Spectra Eccentric Screw Pump

5.4.3 Technical Data

	Weight	Dimensions L x W x H (mm)	Housing material	Material rot. parts	Suction/discharge connection
	kg				
Spectra 12/2 F	24	739 x 200 x 182	Cr Ni Mo 17-12-2	Cr Ni Mo 17-12-2	1/2″, female
Spectra 12/13 F	24	739 x 200 x 182	Cr Ni Mo 17-12-2	Cr Ni Mo 17-12-2	1/2″, female
Spectra 12/33 F	24	739 x 200 x 182	Cr Ni Mo 17-12-2	Cr Ni Mo 17-12-2	1/2″, female
Spectra 12/100 F	24	739 x 200 x 182	Cr Ni Mo 17-12-2	Cr Ni Mo 17-12-2	1/2″, female
Spectra 6/300 F	26	874 x 223 x 192	Grey cast iron	Cr Ni Mo 17-12-2	1 1/4″, female
Spectra 6/650 F	26	874 x 223 x 192	Grey cast iron	Cr Ni Mo 17-12-2	1 1/4″, female
Spectra 5/1400 F	26	874 x 223 x 192	Grey cast iron	Cr Ni Mo 17-12-2	1 1/4″, female
Spectra 3/3000 F	36	950 x 223 x 193	Grey cast iron	Cr Ni Mo 17-12-2	1 1/4″, female
Spectra 3/6500 F	56	1,172 x 237 x 224	Grey cast iron	Cr Ni Mo 17-12-2	DN 50, flange
Spectra 3/12000 F	81	1,487 x 264 x 244	Grey cast iron	Cr Ni Mo 17-12-2	DN 65, flange
Spectra 12/2 FB	28	739 x 220 x 232	Cr Ni Mo 17-12-2	Cr Ni Mo 17-12-2	1/2″, female
Spectra 12/13 FB	28	739 x 220 x 232	Cr Ni Mo 17-12-2	Cr Ni Mo 17-12-2	1/2″, female
Spectra 12/33 FB	28	739 x 220 x 232	Cr Ni Mo 17-12-2	Cr Ni Mo 17-12-2	1/2″, female
Spectra 12/100 FB	28	739 x 220 x 232	Cr Ni Mo 17-12-2	Cr Ni Mo 17-12-2	1/2″, female
Spectra 6/300 FB	33	874 x 230 x 242	Grey cast iron	Cr Ni Mo 17-12-2	1 1/4″, female
Spectra 6/650 FB	33	874 x 230 x 242	Grey cast iron	Cr Ni Mo 17-12-2	1 1/4″, female
Spectra 5/1400 FB	33	874 x 230 x 242	Grey cast iron	Cr Ni Mo 17-12-2	1 1/4″, female
Spectra 3/3000 FB	44	950 x 230 x 242	Grey cast iron	Cr Ni Mo 17-12-2	1 1/4″, female
Spectra 3/6500 FB	67	1,172 x 237 x 274	Grey cast iron	Cr Ni Mo 17-12-2	DN 50, flange
Spectra 3/12000 FB	96	1,487 x 265 x 294	Grey cast iron	Cr Ni Mo 17-12-2	DN 65, flange

5.4.4 Spare Parts

	Order no.
Stator FPM for Spectra 12/2	1025306
Stator FPM for Spectra 12/13	1025307
Stator FPM for Spectra 12/30, 12/33	1025308
Stator made of FPM for Spectra 12/100	1025309
Stator FPM for Spectra 6/300	1025310
Stator made of FPM for Spectra 6/650	1025311
Stator FPM for Spectra 5/1400	1025312
Stator FPM for Spectra 3/3000	1025313
Stator made of FPM for Spectra 3/6500	1025314
Stator FPM for Spectra 3/12000	1025315
Rotor Cr Ni Mo 17-12-2 for Spectra 12/2	1025316
Rotor Cr Ni Mo 17-12-2 for Spectra 12/13	1025317
Rotor Cr Ni Mo 17-12-2 for Spectra 12/30, 12/33	1025318
Rotor made of Cr Ni Mo 17-12-2 for Spectra 12/100	1025319
Rotor Cr Ni Mo 17-12-2 for Spectra 6/300	1025320
Rotor made of Cr Ni Mo 17-12-2 for Spectra 6/650	1025321
Rotor Cr Ni Mo 17-12-2 for Spectra 5/1400	1025322
Rotor Cr Ni Mo 17-12-2 for Spectra 3/3000	1025323
Rotor made of Cr Ni Mo 17-12-2 for Spectra 3/6500	1025324
Rotor Cr Ni Mo 17-12-2 for Spectra 3/12000	1025325
Spare parts kit for axial face seal for Spectra 12/2 - 12/100	1025326
Spare parts kit mech. sealing for Spectra 6/300 - 5/1400	1025330
Spare parts kit mech. sealing for Spectra 3/3000	1025333
Spare parts kit for axial face seal for Spectra 3/6500	1025334
Spare parts kit mech. sealing for Spectra 3/12000	1025335
Spare parts kit for pin joint for Spectra 12/2 - 12/100	1025346
Pin joints spare parts kit Spectra 6/300 - 5/1400	1025350
Pin joints spare parts kit Spectra 3/3000	1025353
Spare parts kit for pin joint for Spectra 3/6500	1025354
Pin joints spare parts kit Spectra 3/12000	1025355

5.5 von Taine® Centrifugal Pump

5.5.1 von Taine® Magnetically Coupled Centrifugal Pumps

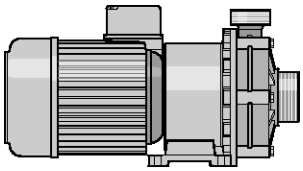

pk_3_026

Metering pumps for liquid media

von Taine® pumps are magnetically coupled centrifugal pumps. Thanks to the magnetic coupling, the pumps transport the liquid media leak-free from container to container or from a container into a discharge line. The von Taine® centrifugal pumps deliver media up to 22,500 l/hr and up to a delivery height of 23.5 metres. Because the capacity heavily depends on the backpressure, the delivery characteristic must be absolutely observed. When selecting the pumps, the material compatibility is to be checked and density, viscosity, solid fraction, and temperature of the delivered medium are to be considered. A low solid fraction in the delivered medium is permissible. The pump is not self-priming and requires a feed.

The following material types are available:

- Pump head: PP or PVDF
- Seals: FPM or EPDM

The bearings of the pumps are made of "oxide ceramics" and may not run dry. The pump is to be protected against running dry. The hydraulical connections are equipped with pipe threads according to DIN ISO 228-1 (internal and external thread cylindrical).

von Taine®, PP/FPM version

	Feed rate at max. pressure	Feed lift max.	Power Uptake	Voltage/ frequency	Weight	Order no.
	l/h	m	kW			
von Taine® 0502 PP/FPM	1,800	4.5	0.06	1~/230 V/50 Hz	2.7 kg	1023089
von Taine® 0807 PP/FPM	6,600	7.9	0.25	3~/400 V/50 Hz	5.0 kg	1023090
von Taine® 1010 PP/FPM	9,600	10.0	0.37	3~/400 V/50 Hz	7.6 kg	1023091
von Taine® 1313 PP/FPM	13,200	13.2	0.65	3~/400 V/50 Hz	8.7 kg	1023092
von Taine® 1820 PP/FPM	19,500	18.1	1.10	3~/400 V/50 Hz	16.0 kg	1023093
von Taine® 2323 PP/FPM	22,500	23.5	1.50	3~/400 V/50 Hz	17.0 kg	1023094

von Taine®, PVDF/FPM version

	Feed rate at max. pressure	Feed lift max.	Power Uptake	Voltage/ frequency	Weight	Order no.
	l/h	m	kW			
von Taine® 0502 PVDF/FPM	1,800	4.5	0.06	1~/230 V/50 Hz	2.8 kg	1023095
von Taine® 0807 PVDF/FPM	6,600	7.9	0.25	3~/400 V/50 Hz	5.2 kg	1023096
von Taine® 1010 PVDF/FPM	9,600	10.0	0.37	3~/400 V/50 Hz	8.0 kg	1023097
von Taine® 1313 PVDF/FPM	13,200	13.2	0.65	3~/400 V/50 Hz	9.0 kg	1023098
von Taine® 1820 PVDF/FPM	19,500	18.2	1.10	3~/400 V/50 Hz	16.7 kg	1023099
von Taine® 2323 PVDF/FPM	22,500	23.5	1.50	3~/400 V/50 Hz	17.7 kg	1023100

5.5 von Taine® Centrifugal Pump

von Taine®, PP/EPDM version

	Feed rate at max. pressure	Feed lift max.	Power Uptake	Voltage/ frequency	Weight	Order no.
	l/h	m	kW			
von Taine® 0502 PP/EPDM	1,800	4.5	0.06	1~/230 V/50 Hz	2.7 kg	1028551
von Taine® 0807 PP/EPDM	6,600	7.9	0.25	3~/400 V/50 Hz	5.0 kg	1028552
von Taine® 1010 PP/EPDM	9,600	10.0	0.37	3~/400 V/50 Hz	7.6 kg	1028553
von Taine® 1313 PP/EPDM	13,200	13.2	0.65	3~/400 V/50 Hz	8.7 kg	1028564
von Taine® 1820 PP/EPDM	19,500	18.1	1.10	3~/400 V/50 Hz	16.0 kg	1028565
von Taine® 2323 PP/EPDM	22,500	23.5	1.50	3~/400 V/50 Hz	17.0 kg	1028566

von Taine®, PVDF/EPDM version

	Feed rate at max. pressure	Feed lift max.	Power Uptake	Voltage/ frequency	Weight	Order no.
	l/h	m	kW			
von Taine® 0502 PVDF/EPDM	1,800	4.5	0.06	1~/230 V/50 Hz	2.8 kg	1028567
von Taine® 0807 PVDF/EPDM	6,600	7.9	0.25	3~/400 V/50 Hz	5.2 kg	1028568
von Taine® 1010 PVDF/EPDM	9,600	10.0	0.37	3~/400 V/50 Hz	8.0 kg	1028569
von Taine® 1313 PVDF/EPDM	13,200	13.2	0.65	3~/400 V/50 Hz	9.0 kg	1028570
von Taine® 1820 PVDF/EPDM	19,500	18.1	1.10	3~/400 V/50 Hz	16.7 kg	1028571
von Taine® 2323 PVDF/EPDM	22,500	23.5	1.50	3~/400 V/50 Hz	17.7 kg	1028572

Parameters For Use

	Medium temperature max.	Maximum density	max. Viscosity	max. System pressure at 20° C
	°C	kg/dm³	m Pas	bar
von Taine® 0502 PP	80	1.25…1.35	20	1.0
von Taine® 0807 PP	80	1.20…1.80	20	2.5
von Taine® 1010 PP	80	1.60…2.00	20	2.5
von Taine® 1313 PP	80	1.60…1.90	20	2.5
von Taine® 1820 PP	80	1.10…1.80	20	5.0
von Taine® 2323 PP	80	1.00…2.00	20	5.0
von Taine® 0502 PVDF	95	1.25…1.35	20	1.0
von Taine® 0807 PVDF	95	1.20…1.80	20	2.5
von Taine® 1010 PVDF	95	1.60…2.00	20	2.5
von Taine® 1313 PVDF	95	1.60…1.90	20	2.5
von Taine® 1820 PVDF	95	1.10…1.80	20	5.0
von Taine® 2323 PVDF	95	1.00…2.00	20	5.0

5.5 von Taine® Centrifugal Pump

Characteristic Curves

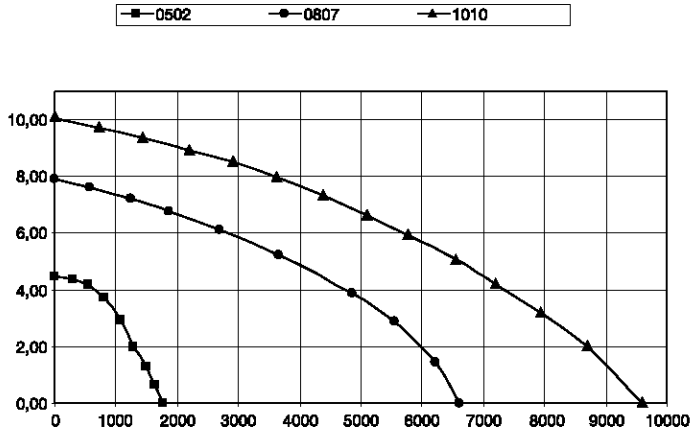

pk_2_080_1

Delivered quantity [l/h] as a function of delivery head [mWC]

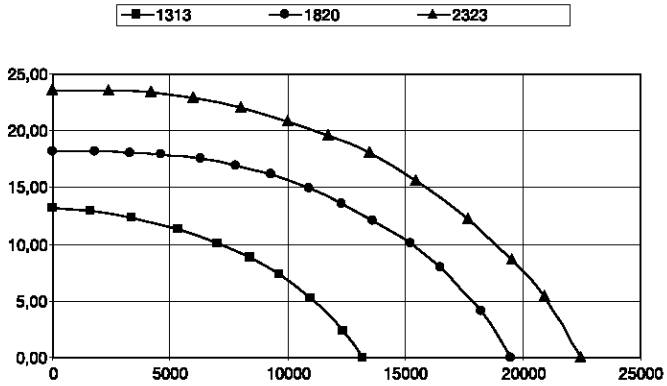

pk_2_115

Delivered quantity [l/h] as a function of delivery head [mWC]

5.5 von Taine® Centrifugal Pump

Dimensions

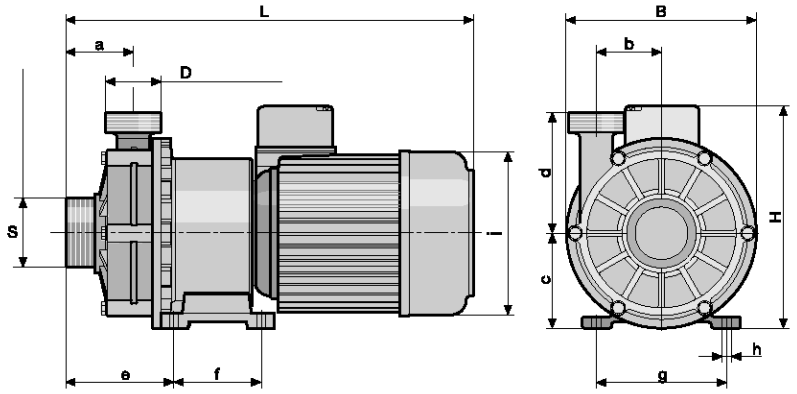

pk_3_027

		von Taine® 0502 PVDF	von Taine® 0807 PVDF	von Taine® 1010 PVDF	von Taine® 1313 PVDF	von Taine® 1820 PVDF	von Taine® 2323 PVDF
Discharge connector (D)		G 1″	G 1 1/4″	G 1 1/2″	G 1 1/2″	G 2″	G 2″
Suction connector (S)		G 1 1/4″	G 1 1/4″	G 2″	G 2″	G 2 1/4″	G 2 1/4″
L	mm	240	283	320	350	430	430
B	mm	120	138	163	163	205	205
H	mm	145	185	191	191	227	227
a	mm	37.0	45.0	58.5	58.5	70.0	70.0
b	mm	29.5	29.5	56.0	56.0	70.0	70.0
c	mm	60.0	70.0	82.0	82.0	104.5	104.5
d	mm	65.5	86.0	104.0	104.0	134.5	134.5
e	mm	129	50	106	106	115	115
f	mm	78	71	74	74	100	100
g	mm	91	91	114	114	130	130
h	mm	6.5	8.5	8.5	8.5	10.0	10.0
i	mm	92	135	135	135	155	155
Enclosure rating		IP 55	IP 55	IP 55	IP 55	IP 55	IP 55
Min. flow	l/h	30	60	60	60	90	120

5.5 von Taine® Centrifugal Pump

5.5.2 Spare Parts Kits

	Order no.
PP/FPM liquid end for von Taine® 0502	1023978
PP/FPM liquid end forr von Taine® 0807	1023979
PP/FPM liquid end for von Taine® 1010	1023980
PP/FPM liquid end for von Taine® 1313	1023981
PP/FPM liquid end for von Taine® 1820	1023982
PP/FPM liquid end for von Taine® 2323	1023983
PVDF/FPM liquid end for von Taine® 0502	1023994
PVDF/FPM liquid end for von Taine® 0807	1023995
PVDF/FPM liquid end for von Taine® 1010	1023996
PVDF/FPM liquid end for von Taine® 1313	1023997
PVDF/FPM liquid end for von Taine® 1820	1023998
PVDF/FPM liquid end for von Taine® 2323	1023999

	Order no.
PP/EPDM liquid end for von Taine® 0502	1028573
PP/EPDM liquid end for von Taine® 0807	1028574
PP/EPDM liquid end forvon Taine® 1010	1028575
PP/EPDM liquid end for von Taine® 1313	1028576
PP/EPDM liquid end for von Taine® 1820	1028577
PP/EPDM liquid end for von Taine® 2323	1028578
PVDF/EPDM liquid end for von Taine® 0502	1028579
PVDF/EPDMliquid end for von Taine® 0807	1028580
PVDF/EPDM liquid end for von Taine® 1010	1028581
PVDF/EPDM liquid end for von Taine® 1313	1028582
PVDF/EPDM liquid end for von Taine® 1820	1028583
PVDF/EPDM liquid end for von Taine® 2323	1028584

	Order no.
Motor for von Taine® 0502	1024000
Motor for von Taine® 0807	1024001
Motor for von Taine® 1010	1024002
Motor for von Taine® 1313	1024003
Motor for von Taine® 1820	1024004
Motor for von Taine® 2323	1024005

5.6 Duodos Air Operated Diaphragm Pump

5.6.1 Duodos Air Operated Diaphragm Pumps

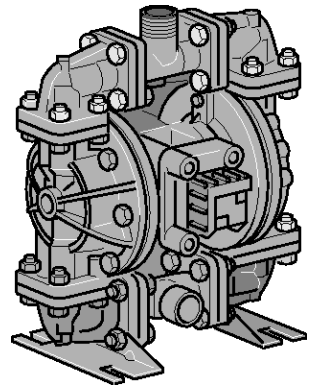

pk_2_062

Duodos pumps are air operated double diaphragm pumps. Thanks to the operation with air, the pump has no electrical components. Duodos pumps are dry-running safe and self-priming. By adjusting the pressure in the air supply, the delivery rate of the pump can be controlled. The air control is designed for oil-free operation. The maintenance-free air control valve facilitates a trouble-free operation and guarantees a re-start. No pressure-control valves are required, the pump simply stops in case of high backpressure and re-starts automatically if the pressure is released. Duodos pumps are the optimum solution for metering liquid chemicals. Duodos pumps transport media up to approx. 6,700l/h or up to a delivery height of 70m. Because the capacity heavily depends on the backpressure, the delivery characteristic must be absolutely observed. But the differential pressure between the hydraulic and the pneumatic end should not exceed the value of 2 bar. Higher values reduce the life of the pump. When selecting the pump, the material compatibility should be checked. In addition, density, vicosity, solid fraction, and temperature of the delivered medium are to be considered.

The following materials are available:

- PP pump chambers with Santoprene® diaphragms and valves
- PVDF pump chambers with PTFE diaphragms and valves

Parameters For Use

	Min. temperature °C	Max. temperature °C	max. Viscosity m Pas	Suction capacity dry m	Suction capacity wet m
Duodos 10 PP	5	65	200	1.7	7.7
Duodos 10 PVDF	-13	93	200	1.7	7.7
Duodos 15 PP	5	65	200	3.6	8.2
Duodos 15 PVDF	-13	93	200	2.3	8.2
Duodos 20 PP	5	65	200	1.8	8.2
Duodos 20 PVDF	-13	93	200	2.1	8.2
Duodos 25 PP	5	65	200	5.1	8.2
Duodos 25 PVDF	-13	93	200	5.4	8.2

Duodos PP

	Housing material	Diaphragms/ valves	Delivery rate (2 bar differential pressure) l/h	Order no.
Duodos 10 PP	PP	Santoprene®	0…650*	1010793
Duodos 15 PP	PP	Santoprene®	0…2,000*	1010794
Duodos 20 PP	PP	Santoprene®	0…3,000*	1010795
Duodos 25 PP	PP	Santoprene®	0…6,700*	1010796

* Delivery rate at a differential pressure of 2 bar (0.5 bar backpressure, 2.5 bar air pressure).

Santoprene® is a registered trademark of the Monsanto Corporation.

5.6 Duodos Air Operated Diaphragm Pump

Duodos PVDF

	Housing material	Diaphragms/valves	Delivery rate (2 bar differential pressure) l/h	Order no.
Duodos 10 PVDF	PVDF	Teflon	0…650*	1010797
Duodos 15 PVDF	PVDF	Teflon	0…2,000*	1010798
Duodos 20 PVDF	PVDF	Teflon	0…3,000*	1010799
Duodos 25 PVDF	PVDF	Teflon	0…6,700*	1010800

Delivery rate at a differential pressure of 2 bar (0.5 bar backpressure, 2.5 bar air pressure).

Characteristic Curves

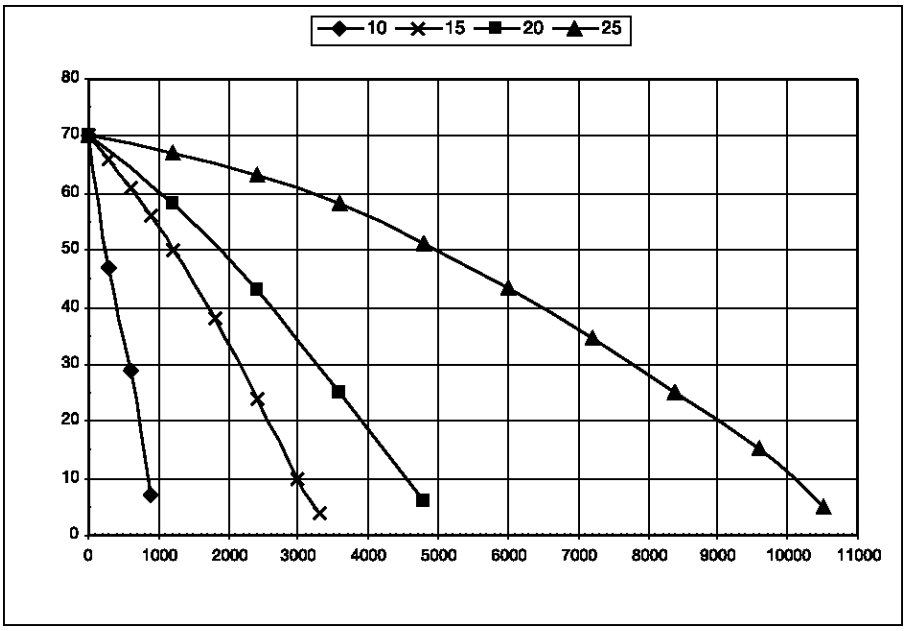

pk_2_114

Feed lift [mWS] over feed rate [l/h] at 7 bar air supply

5.6.2 Spare Part Kits

Spare part kits for pneumatics comprising:

- Seals
- O-rings
- Clamp collars
- Air control valve

	Order no.
Spare part kit, pneumatics for Duodos 10 PP/PVDF	1010810
Spare part kit, pneumatics for Duodos 15/20 PP/PVDF	1010811
Spare part kit, pneumatics for Duodos 25 PP/PVDF	1010813

5.6 Duodos Air Operated Diaphragm Pump

Spare part kits for the liquid end comprising

- Diaphragms
- Valve balls
- Seals

	Order no.
Spare part kit, liquid end for Duodos 10 PP	1010801
Spare part kit, liquid end for Duodos 15 PP	1010802
Spare part kit, liquid end for Duodos 20 PP	1010803
Spare part kit, liquid end for Duodos 25 PP	1010804
Spare part kit, liquid end for Duodos 10 PVDF	1010806
Spare part kit, liquid end for Duodos 15 PVDF	1010807
Spare part kit, liquid end for Duodos 20 PVDF	1010808
Spare part kit, liquid end for Duodos 25 PVDF	1010809

Dimensions

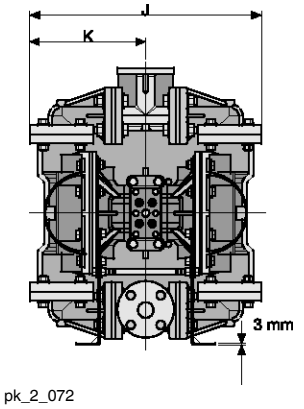

pk_2_072

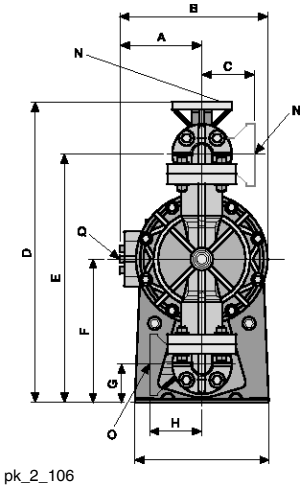

pk_2_106

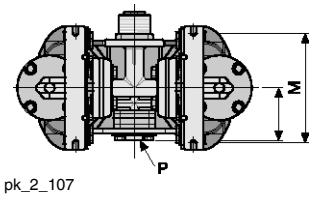

pk_2_107

		Duodos 10	Duodos 15	Duodos 20	Duodos 25
A	mm	79	103	103	143
B	mm	140	179	179	260
C	mm	32	44	60	92
D	mm	198	287	339	527
E	mm	167	243	279	435
F	mm	87	140	163	249
G	mm	19	35	46	64
H	mm	32	44	60	92
I	mm	78	143	143	130
J	mm	178	258	300	433
K	mm	89	129	150	216
L	mm	33	92	114	123
M	mm	66	76	76	102
Discharge connector		1/2″ NPT	1″	1 1/2″	1″ ANSI flange
Suction connector		1/2″ NPT	1″	1 1/2″	1″ ANSI flange
Air consumption	m^3/h	0.5…11	3.5…27	7.0…34	8.5…77
Differential pressure	bar	2	2	2	2
Air connection		1/4″ NPT	1/4″ NPT	1/4″ NPT	1/2″ NPT
Weight (PP)	kg	2	8	9	24
Weight (PVDF)	kg	2.5	9.0	9.5	29.0

5.7 DULCO®Trans Barrel Pump

5.7.1 DULCO®Trans Barrel Pumps

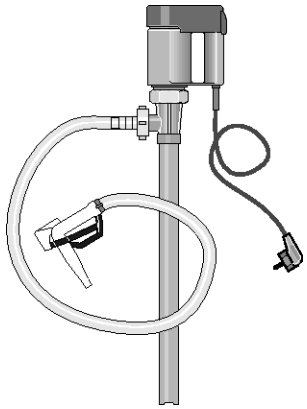

pk_3_029

DULCO®Trans is used for bottling, emptying and transferring liquids from canisters, hobbocks, barrels, tanks and containers. The pump capacity of the DULCO®Trans is 900, 2,800 or 3,750 l/h, depending on the size, and it includes a metering hose with quick action tap. The application range of the DULCO®Trans depends on the chemical resistance of the material used.

The following materials come into contact with the liquids:

	PP version	PVDF version
External and internal pipe, tap	Polypropylene	PVDF
Drive shaft	Hastelloy C	Hastelloy C
Rotor	ETFE	ETFE
Mechanical seal	ceramic oxide/PTFE/carbon	ceramic oxide/PTFE/carbon
O-rings	FPM	FPM
Metering hose	PVC	PVC

DULCO®Trans, PP version

	Feed rate max. *	Feed lift max. m	Order no.
DULCO®Trans 25/700 PP	900 l/h *	5.0	1023085
DULCO®Trans 40/1000 PP	2800 l/h *	9.5	1034225
DULCO®Trans 50/1200 PP	3750 l/h *	12.0	1023087

DULCO®Trans, PVDF version

	Feed rate max. *	Feed lift max. m	Order no.
DULCO®Trans 25/700 PVDF	900 l/h *	5.0	1036145
DULCO®Trans 40/1000 PVDF	2800 l/h *	9.5	1036146
DULCO®Trans 50/1200 PVDF	3750 l/h *	12.0	1036147

* The specified delivery rate includes hose and tap.

Spare parts set for DULCO®Trans

	Order no.
Spare parts set for DULCO®Trans 25/700 PP	1024179
Spare parts set for DULCO®Trans 25/700 PVDF	1036149
Spare parts set for DULCO®Trans 40/1000 PP/PVDF	1034712
Spare parts set for DULCO®Trans 50/1200 PP/PVDF	1024181

For pumps delivered up to 31.12.2008:

	Order no.
Spare parts set for DULCO®Trans 40/1000 PP (Part no. 1023086)	1024180

5.7 DULCO®Trans Barrel Pump

Technical Data

Type		DULCO®Trans 25/700	DULCO®Trans 40/1000	DULCO®Trans 50/1200
Feed rate at max. pressure	l/h	900	2,800	3,750
Feed lift max.	m	5.0	9.5	12.0
max. Density	kg/dm³	1.2	1.5	1.8
max. Viscosity	m Pas	150	500	500
Media temperature PP	°C	45	50	50
Media temperature PVDF	°C	60	60	60
Suction pipe immersion depth	mm	672	961	1,161
Suction pipe outer diameter	mm	25	40	50
Hose connection		DN13	DN19	DN25
Discharge hose		1.5 m, PVC, 13/18 mm	2.0 m, PVC, 19/27 mm	3.0 m, PVC, 25/34 mm
Motor rating	W	230	500	800
Enclosure rating		IP 24	IP 24	IP 24
Voltage/frequency		230 V/1~/50/60 Hz	230 V/1~/50/60 Hz	230 V/1~/50/60 Hz
Under-voltage cut-out		without	with	with
Overvoltage safety switch		with	with	with
Temperature monitoring		None	with	None
Speed control		2-stage	4-stage	without
Connection cable		5 m, with EUR plug	5 m, with EUR plug	5 m, with EUR plug
Drum adapter		None	G 2"	G 2"
Weight PP/PVDF	kg	2.4/2.6	5.1/5.4	7.4/8.2
Dimensions H x W x D	mm	927 x 197 x 83	1,272 x 185 x 95	1,489 x 217 x 115

Dimensions

Type		DULCO®Trans 25/700	DULCO®Trans 40/1000	DULCO®Trans 50/1200
A	mm	197	185	217
B	mm	83	113	113
C	mm	672	961	1,161
D	mm	700	1,006	1,206
F	mm	25	40	50
G	DN	13	19	25
H	mm	927	1,272	1,489

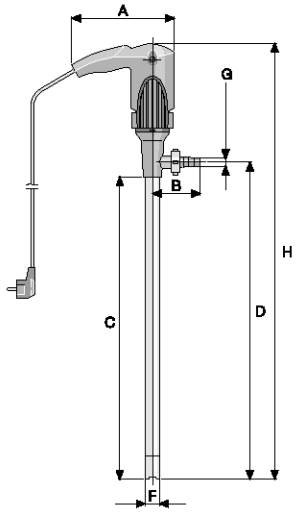

pk_3_028

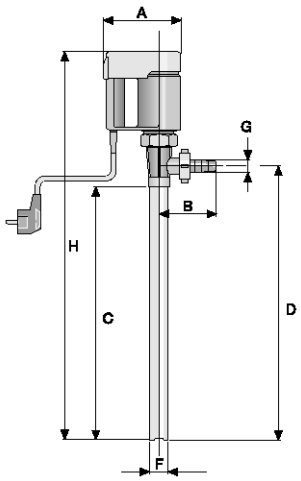

pk_3_029_1

5.8 DULCO®flex

5.8.1 DULCO®flex peristaltic Pump

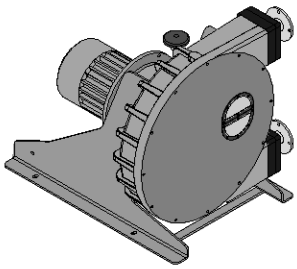

P_DX_0010_SW1

Key features of peristaltic pumps from ProMinent are their simple operation and compact, robust design. They are self-priming and operate without seals and valves. Owing to their large pump capacity range from 17 to 38,000 l/h and wide range of different hose materials, peristaltic pumps of the DULCO®flex series are suitable for use with almost all metering and feed operations, both in laboratories and in industry. Whereas the pumps are fitted with roller technology for low pressures of up to 8 bar, they have shoes for higher pressures of up to 15 bar.

The feed chemical is conveyed by the rotor squeezing the hose in the direction of flow. No valves are needed for this. Abrasive, viscous and sensitive media can thereby be gently conveyed. The pumping process is triggered by an elastomer hose, pressed by two rotating rollers or shoes against the pump housing. Once the rollers or shoes have passed by, the reinforced hose immediately becomes erect again and creates a vacuum at the inlet of the pump. Atmospheric pressure causes the medium to flow in. The feed rate is proportional to the speed of the pump. A vacuum device can optionally be used to assist the return to position of the hose on series DFCa and DFDa pumps, thereby improving their suction behaviour and ensuring the even feed of viscose media.

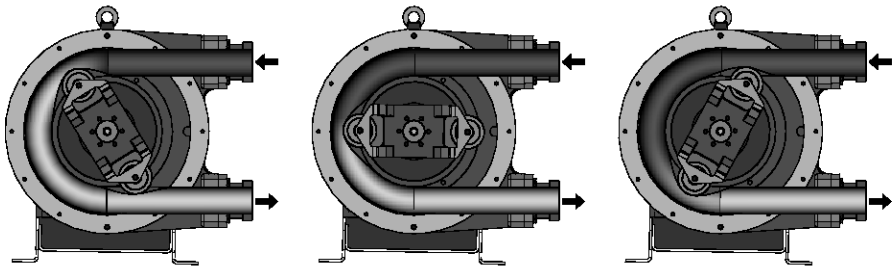

P_DX_0028_SW3

DULCO®flex peristaltic pumps can be use to convey media with the following properties:

- pasty and solid-containing
- viscouse
- abrasive
- shear-sensitive
- outgassing
- corrosive

The pumps can be selected with the aid of an identcode:

Overview:

Type	Application	Feed rate at max. pressure l/h	Max. Pressure bar	Rollers/shoes	Rotor bearing
DFAa	Laboratory	105	2	Rollers	Drive
DFBa	Industry	431	8	Rollers	Drive
DFCa	Industry	10,100	8	Rollers	Ball bearings
DFDa	Industry	15,000	15	Shoes	Ball bearings

5.8 DULCO®flex

5.8.2 DULCO®flex Peristaltic Pump DFA

DULCO®flex Peristaltic Pump DFAa 003

DFAa	Type								
	003	DFAa, with 3.2 mm hose, wall thickness 2.4 mm (1.66 ml/revolution)							
		Drive unit							
		000	without drive unit						
		A10	0.09 kW, 14 rpm, 1.4 l/h, 2 bar (fixed speed)						
		A11	0.12 kW, 35 rpm, 3.5 l/h, 2 bar (fixed speed)						
		A12	0.12 kW, 70 rpm, 7.0 l/h, 2 bar (fixed speed)						
		A13	0.18 kW, 93 rpm, 9.3 l/h, 2 bar (fixed speed)						
		A14	0.18 kW, 140 rpm, 13.9 l/h, 2 bar (fixed speed)						
		A21	0.15 kW, 10.9 - 57 rpm, 1.1-5.7 l/h, 2 bar (manual adjustment gears)						
		A22	0.25 kW, 34 - 176 rpm, 3.4-17.5 l/h, 2 bar (manual adjustment gears)						
		A31	0.18 kW, 13 - 130 rpm, 1,3-12.9 l/h, 2 bar (Gear motor with integral frequency converter)						
		A41	0.18 kW, 0 - 93 rpm, 0-9.3 l/h, 2 bar (Gear motor, external frequency converter required)						
			Hose material						
			A	Norprene A60G					
			B	Norprene A60F (food grade)					
			C	Solva					
			D	Silicone					
				Base plate					
				0	Base plate, painted steel				
				1	Base plate, stainless steel				
					Batch controller				
					0	Without controller			
					R	With controller			
						Special motor			
						0	Standard (3 phase)		
						D	Single phase motor, 0.12 kW (only for A10-A14)		
						E	Single phase motor, 0.18 kW (only for A10-A14)		
							Pump head		
							0	with one pump head	
							C	Double head version	
								Approvals	
								01	CE

DULCO®flex Peristaltic Pump DFAa 008

DFAa	Type								
	008	DFAa with 8.0 mm hose, wall thickness 2.4 mm (10 ml/revolution)							
		Drive unit							
		000	without drive unit						
		B10	0.09 kW, 14 rpm, 8.4 l/h, 2 bar (fixed speed)						
		B11	0.12 kW, 35 rpm, 21 l/h, 2 bar (fixed speed)						
		B12	0.12 kW, 70 rpm, 42 l/h, 2 bar (fixed speed)						
		B13	0.18 kW, 93 rpm, 55.8 l/h, 2 bar (fixed speed)						
		B14	0.18 kW, 140 rpm, 84 l/h, 2 bar (fixed speed)						
		B21	0.15 kW, 10.9 - 57 rpm, 6.5-34.2 l/h, 2 bar (manual adjustment gears)						
		B22	0.25 kW, 34 - 176 rpm, 20.4-105 l/h, 2 bar (manual adjustment gears)						
		B31	0.18 kW, 13 - 130 rpm, 7.8-78 l/h, 2 bar (Gear motor with integral frequency converter)						
		B41	0.18 kW, 0 - 93 rpm, 0-55.8 l/h, 2 bar (Gear motor, external frequency converter required)						
			Hose material						
			A	Norprene A60G					
			B	Norprene A60F (food grade)					
			C	Solva					
			D	Silicone					
				Base plate					
				0	Base plate, painted steel				
				1	Base plate, stainless steel				
					Batch controller				
					0	Without controller			
					R	With controller			
						Special motor			
						0	Standard (3 phase)		
						D	Single phase motor, 0.12 kW (only for B10-B14)		
						E	Single phase motor, 0.18 kW (only for B10-B14)		
							Pump head		
							0	with one pump head	
							C	Double head version	
								Approvals	
								01	CE

5.8 DULCO®flex

5.8.3 DULCO®flex Peristaltic Pump DFB

DULCO®flex Peristaltic Pump DFBa 010

DFBa	Type											
	010	DFBa 010, 0.024 l/revolution										
		Drive unit										
		000	without drive unit									
		A10	0.12 kW, 15 rpm, 21 l/h, 8 bar (fixed speed)									
		A11	0.12 kW, 20 rpm, 28 l/h, 8 bar (fixed speed)									
		A12	0.18 kW, 29 rpm, 41 l/h, 8 bar (fixed speed)									
		A13	0.18 kW, 46 rpm, 66 l/h, 4 bar (fixed speed)									
		A14	0.25 kW, 57 rpm, 82 l/h, 4 bar (fixed speed)									
		A15	0.25 kW, 70 rpm, 100 l/h, 2 bar (fixed speed)									
		A16	0.25 kW, 85 rpm, 122 l/h, 2 bar (fixed speed)									
		A21	0.15 kW, 3 - 16 rpm, 4-23 l/h, 8 bar (manual adjustment gears)									
		A22	0.25 kW, 5 - 29 rpm, 7-41 l/h, 8 bar (manual adjustment gears)									
		A23	0.25 kW, 10 - 53 rpm, 14-76 l/h, 4 bar (manual adjustment gears)									
		A24	0.25 kW, 15 - 80 rpm, 21-115 l/h, 2 bar (manual adjustment gears)									
		A31	0.37 kW, 9 - 34 rpm, 12-48 l/h, 8 bar (Gear motor with integral frequency converter)									
		A32	0.37 kW, 16 - 60 rpm, 23-86 l/h, 4 bar (Gear motor with integral frequency converter)									
		A33	0.37 kW, 28 - 105 rpm, 40-151 l/h, 1 bar (Gear motor with integral frequency converter)									
		A41	0.18 kW, 0 - 23 rpm, 0-33 l/h, 8 bar (Gear motor, external frequency converter required)									
		A42	0.18 kW, 0 - 38 rpm, 0-54 l/h, 8 bar (Gear motor, external frequency converter required)									
		A43	0.25 kW, 0 - 60 rpm, 0-86 l/h, 4 bar (Gear motor, external frequency converter required)									
		A44	0.25 kW, 0 - 91 rpm, 0-131 l/h, 1 bar (Gear motor, external frequency converter required)									
			Hose material									
			0	NR								
			B	NBR								
			E	EPDM								
			R	NR-A								
			N	Norprene (max. 2 bar)								
			A	NBR-A								
			H	Hypalon								
				Hydraulic connections								
				A	VA BSP 3/8"							
				B	VA NPT 3/8"							
				C	PP BSP 3/8"							
				D	PVDF BSP 3/8"							
				E	PVDF NPT 3/8"							
				F	PVC NPT 3/8"							
				G	Tri-Clamp, VA, 1/2"							
				H	DIN 11851, VA, NW10							
					Base plate							
					0	Base plate, painted steel						
					1	Base plate, stainless steel						
					2	Portable unit + painted steel base plate						
					3	Portable unit + stainless steel base plate						
						Leakage sensor						
						0	Without leakage sensor					
						L	With leakage sensor					
							Rotor					
							0	Rotor with 2 rollers				
								Batch controller				
								0	Without controller			
								C	With controller			
									Special version			
									0	Standard		
									H	Halar-coated housing		
										Vacuum system		
										0	without	
											Approvals	
											01	CE

5.8 DULCO®flex

DULCO®flex Peristaltic Pump DFBa 013

DFBa	Type											
	013	DFBa 013, 0.039 l/revolution										
		Drive unit										
		000	without drive unit									
		B10	0.12 kW, 15 rpm, 35 l/h, 8 bar (fixed speed)									
		B11	0.12 kW, 20 rpm, 46 l/h, 8 bar (fixed speed)									
		B12	0.18 kW, 29 rpm, 67 l/h, 8 bar (fixed speed)									
		B13	0.18 kW, 46 rpm, 107 l/h, 4 bar (fixed speed)									
		B14	0.25 kW, 57 rpm, 133 l/h, 4 bar (fixed speed)									
		B15	0.25 kW, 70 rpm, 163 l/h, 2 bar (fixed speed)									
		B16	0.25 kW, 85 rpm, 198 l/h, 2 bar (fixed speed)									
		B21	0.15 kW, 3 - 16 rpm, 7-37 l/h, 8 bar (manual adjustment gears)									
		B22	0.25 kW, 5 - 29 rpm, 11-67 l/h, 8 bar (manual adjustment gears)									
		B23	0.25 kW, 10 - 53 rpm, 23-124 l/h, 4 bar (manual adjustment gears)									
		B24	0.25 kW, 15 - 80 rpm, 35-187 l/h, 2 bar (manual adjustment gears)									
		B31	0.37 kW, 9 - 34 rpm, 21-79 l/h, 8 bar (Gear motor with integral frequency converter)									
		B32	0.37 kW, 16 - 60 rpm, 37-140 l/h, 4 bar (Gear motor with integral frequency converter)									
		B33	0.37 kW, 28 - 105 rpm, 65-245 l/h, 1 bar (Gear motor with integral frequency converter)									
		B41	0.18 kW, 0 - 23 rpm, 0-53 l/h, 8 bar (Gear motor, external frequency converter required)									
		B42	0.18 kW, 0 - 38 rpm, 0-88 l/h, 8 bar (Gear motor, external frequency converter required)									
		B43	0.25 kW, 0 - 60 rpm, 0-140 l/h, 4 bar (Gear motor, external frequency converter required)									
		B44	0.25 kW, 0 - 91 rpm, 0-212 l/h, 1 bar (Gear motor, external frequency converter required)									
			Hose material									
			0	NR								
			B	NBR								
			E	EPDM								
			R	NR-A								
			N	Norprene (max. 2 bar)								
			A	NBR-A								
			H	Hypalon								
				Hydraulic connections								
				A	VA BSP 3/8"							
				B	VA NPT 3/8"							
				C	PP BSP 3/8"							
				D	PVDF BSP 3/8"							
				E	PVDF NPT 3/8"							
				F	PVC NPT 3/8"							
				G	Tri-Clamp, VA, 3/4"							
				H	DIN 11851, VA, NW15							
					Base plate							
					0	Base plate, painted steel						
					1	Base plate, stainless steel						
					2	Portable unit + painted steel base plate						
					3	Portable unit + stainless steel base plate						
						Leakage sensor						
						0	Without leakage sensor					
						L	With leakage sensor					
							Rotor					
							0	Rotor with 2 rollers				
								Batch controller				
								0	Without controller			
								C	With controller			
									Special version			
									0	Standard		
									H	Halar-coated housing		
										Vacuum system		
										0	without	
											Approvals	
											01	CE

5.8 DULCO®flex

DULCO®flex Peristaltic Pump DFBa 016

DFBa	Type											
	016	DFBa 016, 0.092 l/revolution										
		Drive unit										
		000	without drive unit									
		C10	0.18 kW, 14 rpm, 77 l/h, 8 bar (fixed speed)									
		C11	0.18 kW, 20 rpm, 110 l/h, 8 bar (fixed speed)									
		C12	0.25 kW, 32 rpm, 176 l/h, 8 bar (fixed speed)									
		C13	0.25 kW, 46 rpm, 253 l/h, 4 bar (fixed speed)									
		C14	0.37 kW, 57 rpm, 314 l/h, 4 bar (fixed speed)									
		C15	0.37 kW, 70 rpm, 386 l/h, 2 bar (fixed speed)									
		C16	0.37 kW, 85 rpm, 469 l/h, 2 bar (fixed speed)									
		C21	0.37 kW, 8 - 50 rpm, 44-276 l/h, 4 bar (manual adjustment gears)									
		C22	0.37 kW, 10 - 61 rpm, 55-336 l/h, 2 bar (manual adjustment gears)									
		C23	0.37 kW, 16 - 91 rpm, 88-502 l/h, 1 bar (manual adjustment gears)									
		C31	0.37 kW, 9 - 34 rpm, 49-187 l/h, 8 bar (Gear motor with integral frequency converter)									
		C32	0.37 kW, 16 - 60 rpm, 88-331 l/h, 2 bar (Gear motor with integral frequency converter)									
		C33	0.37 kW, 28 - 105 rpm, 154-579 l/h, 1 bar (Gear motor with integral frequency converter)									
		C41	0.25 kW, 0 - 23 rpm, 0-126 l/h, 8 bar (Gear motor, external frequency converter required)									
		C42	0.25 kW, 0 - 42 rpm, 0-231 l/h, 4 bar (Gear motor, external frequency converter required)									
		C43	0.37 kW, 0 - 60 rpm, 0-331 l/h, 2 bar (Gear motor, external frequency converter required)									
		C44	0.37 kW, 0 - 91 rpm, 0-502 l/h, 1 bar (Gear motor, external frequency converter required)									
			Hose material									
			0	NR								
			B	NBR								
			E	EPDM								
			R	NR-A								
			N	Norprene (max. 2 bar)								
			A	NBR-A								
			H	Hypalon								
			T	TYGON (max. 2 bar)								
				Hydraulic connections								
				A	VA BSP 3/4"							
				B	VA NPT 3/4"							
				C	PP BSP 3/4"							
				D	PVDF BSP 3/4"							
				E	PVDF NPT 3/4"							
				F	PVC NPT 3/4"							
				G	Tri-Clamp, VA, 1"							
				H	DIN 11851, VA, NW20							
					Base plate							
					0	Base plate, painted steel						
					1	Base plate, stainless steel						
					2	Portable unit + painted steel base plate						
					3	Portable unit + stainless steel base plate						
						Leakage sensor						
						0	Without leakage sensor					
						L	With leakage sensor					
							Rotor					
							0	Rotor with 2 rollers				
								Batch controller				
								0	Without controller			
								C	With controller			
									Special version			
									0	Standard		
									H	Halar-coated housing		
										Vacuum system		
										0	without	
											Approvals	
											01	CE

5.8 DULCO®flex

DULCO®flex Peristaltic Pump DFBa 019

DFBa	Type											
	019	DFBa 019, 0.122 l/revolution										
		Drive unit										
		000	without drive unit									
		D10	0.18 kW, 14 rpm, 102 l/h, 2 bar (fixed speed)									
		D11	0.18 kW, 20 rpm, 146 l/h, 2 bar (fixed speed)									
		D12	0.25 kW, 32 rpm, 234 l/h, 2 bar (fixed speed)									
		D13	0.25 kW, 46 rpm, 336 l/h, 2 bar (fixed speed)									
		D14	0.37 kW, 57 rpm, 417 l/h, 2 bar (fixed speed)									
		D15	0.37 kW, 70 rpm, 512 l/h, 2 bar (fixed speed)									
		D16	0.37 kW, 85 rpm, 622 l/h, 2 bar (fixed speed)									
		D21	0.37 kW, 8 - 50 rpm, 58-366 l/h, 2 bar (manual adjustment gears)									
		D22	0.37 kW, 10 - 61 rpm, 73-446 l/h, 2 bar (manual adjustment gears)									
		D23	0.37 kW, 16 - 91 rpm, 117-666 l/h, 2 bar (manual adjustment gears)									
		D31	0.37 kW, 9 - 34 rpm, 65-248 l/h, 2 bar (Gear motor with integral frequency converter)									
		D32	0.37 kW, 16 - 60 rpm, 117-439 l/h, 2 bar (Gear motor with integral frequency converter)									
		D33	0.37 kW, 28 - 105 rpm, 204-768 l/h, 2 bar (Gear motor with integral frequency converter)									
		D41	0.25 kW, 0 - 23 rpm, 0-168 l/h, 2 bar (Gear motor, external frequency converter required)									
		D42	0.25 kW, 0 - 42 rpm, 0-307 l/h, 2 bar (Gear motor, external frequency converter required)									
		D43	0.37 kW, 0 - 60 rpm, 0-439 l/h, 2 bar (Gear motor, external frequency converter required)									
		D44	0.37 kW, 0 - 91 rpm, 0-666 l/h, 2 bar (Gear motor, external frequency converter required)									
			Hose material									
			N	Norprene (max. 2 bar)								
			T	TYGON (max. 2 bar)								
				Hydraulic connections								
				A	VA BSP 1"							
				B	VA NPT 1"							
				C	PP BSP 1"							
				D	PVDF BSP 1"							
				E	PVDF NPT 1"							
				F	PVC NPT 1"							
				G	Tri-Clamp, VA, 1"							
				H	DIN 11851, VA, NW25							
					Base plate							
					0	Base plate, painted steel						
					1	Base plate, stainless steel						
					2	Portable unit + painted steel base plate						
					3	Portable unit + stainless steel base plate						
						Leakage sensor						
						0	Without leakage sensor					
						L	With leakage sensor					
							Rotor					
							0	Rotor with 2 rollers				
								Batch controller				
								0	Without controller			
								C	With controller			
									Special version			
									0	Standard		
									H	Halar-coated housing		
										Vacuum system		
										0	without	
											Approvals	
											01	CE

5.8 DULCO®flex

DULCO®flex Peristaltic Pump DFBa 022

DFBa	Type											
	022	DFBa 022, 0.248 l/revolution										
		Drive unit										
		000	without drive unit									
		E10	0.25 kW, 17 rpm, 252 l/h, 8 bar (fixed speed)									
		E11	0.37 kW, 23 rpm, 342 l/h, 8 bar (fixed speed)									
		E12	0.55 kW, 38 rpm, 565 l/h, 4 bar (fixed speed)									
		E13	0.55 kW, 45 rpm, 669 l/h, 4 bar (fixed speed)									
		E14	0.55 kW, 54 rpm, 803 l/h, 2 bar (fixed speed)									
		E15	0.75 kW, 66 rpm, 982 l/h, 2 bar (fixed speed)									
		E21	0.37 kW, 3.9 - 20.4 rpm, 58-303 l/h, 8 bar (manual adjustment gears)									
		E22	0.55 kW, 6 - 32 rpm, 89-476 l/h, 4 bar (manual adjustment gears)									
		E23	0.75 kW, 9 - 48 rpm, 133-714 l/h, 2 bar (manual adjustment gears)									
		E31	0.55 kW, 11 - 40 rpm, 163-595 l/h, 4 bar (Gear motor with integral frequency converter)									
		E32	0.75 kW, 18 - 63 rpm, 267-937 l/h, 2 bar (Gear motor with integral frequency converter)									
		E33	1.1 kW, 27 - 92 rpm, 401-1,368 l/h, 1 bar (Gear motor with integral frequency converter)									
		E41	0.55 kW, 0 - 29 rpm, 0-431 l/h, 8 bar (Gear motor, external frequency converter required)									
		E42	0.75 kW, 0 - 38 rpm, 0-565 l/h, 4 bar (Gear motor, external frequency converter required)									
		E43	1.1 kW, 0 - 54 rpm, 0-803 l/h, 2 bar (Gear motor, external frequency converter required)									
			Hose material									
			0	NR (natural rubber)								
			B	NBR								
			E	EPDM								
			R	NR-A								
			N	Norprene (max. 2 bar back pressure)								
			A	NBR-A								
			H	Hypalon								
				Hydraulic connections								
				A	VA BSP 1"							
				B	VA NPT 1"							
				C	PP BSP 1"							
				D	PVDF BSP 1"							
				E	PVDF NPT 1"							
				F	PVC NPT 1"							
				G	Tri-Clamp, VA, 1"							
				H	DIN 11851, VA, NW25							
					Base plate							
					0	Base plate, painted steel						
					1	Base plate, stainless steel						
					2	Portable unit + painted steel base plate						
					3	Portable unit + stainless steel base plate						
						Leakage sensor						
						0	Without leakage sensor					
						L	With leakage sensor					
							Rotor					
							0	Rotor with 2 rollers				
								Batch controller				
								0	Without controller			
								C	With controller			
									Special version			
									0	Standard		
									H	Halar-coated housing		
										Vacuum system		
										0	without	
											Approvals	
											01	CE

5.8.4 DULCO®flex Peristaltic Pump DFC

DULCO®flex Peristaltic Pump DFCa 030

DFCa	Type											
	030	DFCa 030, 0.433 l/revolution										
		Drive unit										
		000	without drive unit									
		A11	0.25 kW, 18 rpm, 467 l/h, 8 bar (fixed speed)									
		A12	0.37 kW, 28 rpm, 727 l/h, 8 bar (fixed speed)									
		A13	0.55 kW, 38 rpm, 987 l/h, 4 bar (fixed speed)									
		A14	0.55 kW, 55 rpm, 1,428 l/h, 2 bar (fixed speed)									
		A15	0.75 kW, 66 rpm, 1,714 l/h, 2 bar (fixed speed)									
		A21	0.75 kW, 10 - 59 rpm, 259-1,532 l/h, 2 bar (manual adjustment gears)									
		A31	0.55 kW, 11.5 - 40 rpm, 298-1,039 l/h, 4 bar (Gear motor with integral frequency converter)									
		A32	0.75 kW, 18 - 64 rpm, 467-1,662 l/h, 2 bar (Gear motor with integral frequency converter)									
		A33	1.1 kW, 23 - 80 rpm, 597-2,078 l/h, 1 bar (Gear motor with integral frequency converter)									
		A41	0.37 kW, 2 - 28 rpm, 51-727 l/h, 8 bar (Gear motor, external frequency converter required)									
		A42	0.75 kW, 4 - 57 rpm, 103-1,480 l/h, 2 bar (Gear motor, external frequency converter required)									
		A43	1.1 kW, 5 - 80 rpm, 129-2,078 l/h, 1 bar (Gear motor, external frequency converter required)									
			Hose material									
			0	NR								
			B	NBR								
			E	EPDM								
			R	NR-A								
			A	NBR-A								
			H	Hypalon								
				Hydraulic connections								
				A	VA BSP 1 1/4"							
				B	VA NPT 1 1/4"							
				C	PP BSP 1 1/4"							
				D	PVDF BSP 1 1/4"							
				F	PVC NPT 1 1/4"							
				G	Tri-Clamp, VA, 1 1/2"							
				H	DIN 11851, VA, NW32							
				I	DIN flange VA DN32							
				L	ANSI flange VA DN32							
				P	ANSI flange PVC DN32							
					Base plate							
					0	Base plate, painted steel						
					1	Base plate, stainless steel						
					2	Portable unit + painted steel base plate						
					3	Portable unit + stainless steel base plate						
						Leakage sensor						
						0	without leakage sensor					
						L	with leakage sensor					
							Rotor					
							0	Rotor with 2 rollers				
								Batch controller				
								0	without controller			
								C	with controller			
									Special version			
									0	Standard		
										Vacuum system		
										0	without	
										V	with vacuum system	
											Approvals	
											01	CE

5.8 DULCO®flex

DULCO®flex Peristaltic Pump DFCa 040

DFCa	Type											
	040	DFCa 040, 0.91 l/revolution										
		Drive unit										
		000	without drive unit									
		B11	0.55 kW, 18 rpm, 982 l/h, 8 bar (fixed speed)									
		B12	0.55 kW, 29 rpm, 1,583 l/h, 8 bar (fixed speed)									
		B13	0.75 kW, 38 rpm, 2,074 l/h, 4 bar (fixed speed)									
		B14	1.1 kW, 54 rpm, 2,948 l/h, 2 bar (fixed speed)									
		B15	1.5 kW, 66 rpm, 3,603 l/h, 2 bar (fixed speed)									
		B21	1.1 kW, 16 - 56 rpm, 873-3,057 l/h, 2 bar (manual adjustment gears)									
		B31	1.1 kW, 12 - 36 rpm, 655-1,965 l/h, 4 bar (Gear motor with integral frequency converter)									
		B32	1.5 kW, 15 - 53 rpm, 819-2,893 l/h, 2 bar (Gear motor with integral frequency converter)									
		B33	2.2 kW, 22 - 77 rpm, 1201-4,204 l/h, 1 bar (Gear motor with integral frequency converter)									
		B41	1.1 kW, 2 - 49 rpm, 109-2,675 l/h, 2 bar (Gear motor, external frequency converter required)									
		B42	1.5 kW, 4 - 53 rpm, 218-2,893 l/h, 2 bar (Gear motor, external frequency converter required)									
		B43	2.2 kW, 7 - 80 rpm, 382-4,368 l/h, 1 bar (Gear motor, external frequency converter required)									
			Hose material									
			0	NR								
			B	NBR								
			E	EPDM								
			R	NR-A								
			A	NBR-A								
			H	Hypalon								
			N	Norprene (max. 2 bar)								
				Hydraulic connections								
				A	VA BSP 1 1/2"							
				B	VA NPT 1 1/2"							
				C	PP BSP 1 1/2"							
				D	PVDF BSP 1 1/2"							
				G	Tri-Clamp, VA, 1 1/2"							
				H	DIN 11851, VA, NW40							
				I	DIN flange VA DN40							
				L	ANSI flange VA DN40							
				P	ANSI flange PVC DN40							
					Base plate							
					0	Base plate, painted steel						
					1	Base plate, stainless steel						
					2	Portable unit + painted steel base plate						
					3	Portable unit + stainless steel base plate						
						Leakage sensor						
						0	without leakage sensor					
						L	with leakage sensor					
							Rotor					
							0	Rotor with 2 rollers				
								Batch controller				
								0	without controller			
								C	with controller			
									Special version			
									0	Standard		
										Vacuum system		
										0	without	
										V	with vacuum system	
											Approvals	
											01	CE

5.8 DULCO®flex

DULCO®flex Peristaltic Pump DFCa 050

DFCa	Type											
	050	DFCa 050, 1.46 l/revolution										
		Drive unit										
		000	without drive unit									
		C11	0.55 kW, 14.1 rpm, 1,235 l/h, 8 bar (fixed speed)									
		C12	0.75 kW, 21 rpm, 1,839 l/h, 8 bar (fixed speed)									
		C13	1.1 kW, 30 rpm, 2,628 l/h, 4 bar (fixed speed)									
		C14	1.5 kW, 38 rpm, 3,328 l/h, 4 bar (fixed speed)									
		C15	1.5 kW, 48 rpm, 4,204 l/h, 2 bar (fixed speed)									
		C16	2.2 kW, 58 rpm, 5,080 l/h, 2 bar (fixed speed)									
		C21	1.5 kW, 8.8 - 44 rpm, 770-3,854 l/h, 4 bar (manual adjustment gears)									
		C31	1.5 kW, 9 - 32 rpm, 788-2,803 l/h, 4 bar (Gear motor with integral frequency converter)									
		C32	2.2 kW, 15 - 54 rpm, 1314-4,730 l/h, 2 bar (Gear motor with integral frequency converter)									
		C33	3.0 kW, 22 - 77 rpm, 1927-6,745 l/h, 1 bar (Gear motor with integral frequency converter)									
		C41	1.5 kW, 2 - 32 rpm, 175-2,803 l/h, 4 bar (Gear motor, external frequency converter required)									
		C42	2.2 kW, 4 - 54 rpm, 350-4,730 l/h, 2 bar (Gear motor, external frequency converter required)									
		C43	3.0 kW, 5.5 - 77 rpm, 481-6,745 l/h, 1 bar (Gear motor, external frequency converter required)									
			Hose material									
			0	NR								
			B	NBR								
			E	EPDM								
			R	NR-A								
			A	NBR-A								
			H	Hypalon								
				Hydraulic connections								
				I	DIN flange VA DN40							
				G	Tri-Clamp, VA, 2"							
				H	DIN 11851, VA, NW50							
				J	DIN flange PP DN40							
				K	DIN flange VA, Halar coated + PVDF inserts DN40							
				L	ANSI flange VA DN40							
				M	ANSI flange PP DN40							
				N	ANSI flange VA, Halar coated + PVDF inserts DN40							
					Base plate							
					0	Base plate, painted steel						
					1	Base plate, stainless steel						
					2	Portable unit + painted steel base plate						
					3	Portable unit + stainless steel base plate						
						Leakage sensor						
						0	without leakage sensor					
						L	with leakage sensor					
							Rotor					
							0	Rotor with 2 rollers				
								Batch controller				
								0	without controller			
									Special version			
									0	Standard		
										Vacuum system		
										0	without	
										V	with vacuum system	
											Approvals	
											01	CE

5.8 DULCO®flex

DULCO®flex Peristaltic Pump DFCa 060

DFCa	Type											
	060	DFCa 060, 3.12 l/revolution										
		Drive unit										
		000	without drive unit									
		D11	2.2 kW, 18 rpm, 3.3 m^3/h, 8 bar (fixed speed)									
		D12	2.2 kW, 21 rpm, 3.9 m^3/h, 8 bar (fixed speed)									
		D13	3.0 kW, 27 rpm, 5 m^3/h, 8 bar (fixed speed)									
		D14	3.0 kW, 33 rpm, 6.1 m^3/h, 4 bar (fixed speed)									
		D15	3.0 kW, 42 rpm, 7.8 m^3/h, 4 bar (fixed speed)									
		D16	3.0 kW, 47 rpm, 8.7 m^3/h, 2 bar (fixed speed)									
		D17	3.0 kW, 57 rpm, 10.6 m^3/h, 2 bar (fixed speed)									
		D21	4.0 kW, 8 - 49 rpm, 1.4-9.1 m^3/h, 2 bar (manual adjustment gears)									
		D31	3.0 kW, 7 - 25 rpm, 1,3-4.6 m^3/h, 8 bar (Gear motor with integral frequency converter)									
		D32	4.0 kW, 15 - 53 rpm, 2.8-9.9 m^3/h, 2 bar (Gear motor with integral frequency converter)									
			Hose material									
			0	NR								
			B	NBR								
			E	EPDM								
			R	NR-A								
			A	NBR-A								
			H	Hypalon								
				Hydraulic connections								
				I	DIN flange VA DN50							
				G	Tri-Clamp, VA, 2 1/2"							
				H	DIN 11851, VA, NW50							
				J	DIN flange PP DN50							
				K	DIN flange VA, Halar coated + PVDF inserts DN50							
				L	ANSI flange VA DN50							
				M	ANSI flange PP DN50							
				N	ANSI flange VA, Halar coated + PVDF inserts DN50							
					Base plate							
					0	Base plate, painted steel						
					1	Base plate, stainless steel						
					2	Portable unit + painted steel base plate						
					3	Portable unit + stainless steel base plate						
						Leakage sensor						
						0	without leakage sensor					
						L	with leakage sensor					
							Rotor					
							0	Rotor with 2 rollers				
								Batch controller				
								0	without controller			
									Special version			
									0	Standard		
										Vacuum system		
										0	without	
										V	with vacuum system	
											Approvals	
											01	CE

5.8 DULCO®flex

DULCO®flex Peristaltic Pump DFCa 070

DFCa	Type											
	070	DFCa 070, 8.05 l/revolution										
		Drive unit										
		000	without drive unit									
		E11	2.2 kW, 14 rpm, 6.7 m^3/h, 8 bar (fixed speed)									
		E12	3.0 kW, 21 rpm, 10.1 m^3/h, 8 bar (fixed speed)									
		E13	4.0 kW, 26 rpm, 12.5 m^3/h, 4 bar (fixed speed)									
		E14	4.0 kW, 32 rpm, 15.4 m^3/h, 4 bar (fixed speed)									
		E15	5.5 kW, 37 rpm, 17.8 m^3/h, 4 bar (fixed speed)									
		E16	5.5 kW, 46 rpm, 22.2 m^3/h, 2 bar (fixed speed)									
		E17	5.5 kW, 54 rpm, 26.0 m^3/h, 2 bar (fixed speed)									
		E31	5.5 kW, 9 - 32 rpm, 4.3-15.4 m^3/h, 4 bar (Gear motor with integral frequency converter)									
		E32	7.5 kW, 14 - 47 rpm, 6.7-22.7 m^3/h, 2 bar (Gear motor with integral frequency converter)									
			Hose material									
			0	NR								
			B	NBR								
			E	EPDM								
			R	NR-A								
			A	NBR-A								
			H	Hypalon								
				Hydraulic connections								
				I	DIN flange VA DN65							
				G	Tri-Clamp, VA, 3"							
				H	DIN 11851, VA, NW65							
				J	DIN flange PP DN65							
				L	ANSI flange VA DN65							
				M	ANSI flange PP DN65							
				Q	DIN flange VA Halar coated DN65							
				R	ANSI flange VA Halar coated DN65							
					Base plate							
					0	Base plate, painted steel						
					1	Base plate, stainless steel						
					2	Portable unit + painted steel base plate						
					3	Portable unit + stainless steel base plate						
						Leakage sensor						
						0	without leakage sensor					
						L	with leakage sensor					
							Rotor					
							0	Rotor with 2 rollers				
								Batch controller				
								0	without controller			
									Special version			
									0	Standard		
										Vacuum system		
										0	without	
										V	with vacuum system	
											Approvals	
											01	CE

5.8 DULCO®flex

DULCO®flex Peristaltic Pump DFCa 070D

DFCa	Type											
	70D	DFCa 70D, 15.83 l/revolution, double head version										
		Drive unit										
		F11	5.5 kW, 15 rpm, 14.2 m³/h, 4 bar (fixed speed)									
		F12	7.5 kW, 22 rpm, 20.8 m³/h, 2 bar (fixed speed)									
		F13	7.5 kW, 31 rpm, 29.4 m³/h, 2 bar (fixed speed)									
		F14	9.2 kW, 40 rpm, 38.0 m³/h, 2 bar (fixed speed)									
			Hose material									
			0	NR								
			B	NBR								
			E	EPDM								
			R	NR-A								
			A	NBR-A								
				Hydraulic connections								
				I	DIN flange VA DN80							
				G	Tri-Clamp, VA, 4"							
				H	DIN 11851, VA, NW80							
				L	ANSI flange VA DN80							
					Base plate							
					0	Base plate, painted steel						
					1	Base plate, stainless steel						
						Leakage sensor						
						0	without leakage sensor					
						L	with leakage sensor					
							Rotor					
							0	Rotor with 2 rollers				
								Batch controller				
								0	without controller			
									Special version			
									0	Standard		
										Vacuum system		
										0	without	
											Approvals	
											01	CE

5.8 DULCO®flex

5.8.5 DULCO®flex Peristaltic Pump DFD

DULCO®flex Peristaltic Pump DFDa 025

DFDa	Type											
	025	DFDa 025, 0.3 l/revolution										
		Drive unit										
		000	without drive unit									
		A11	0.55 kW, 18 rpm, 324 l/h, 15 bar (fixed speed)									
		A12	0.75 kW, 28 rpm, 504 l/h, 15 bar (fixed speed)									
		A13	0.75 kW, 39 rpm, 702 l/h, 10 bar (fixed speed)									
		A14	0.75 kW, 47 rpm, 846 l/h, 5 bar (fixed speed)									
		A15	1.1 kW, 55 rpm, 990 l/h, 5 bar (fixed speed)									
		A21	1.1 kW, 11 - 53 rpm, 198-954 l/h, 5 bar (manual adjustment gears)									
		A31	1.1 kW, 16 - 55 rpm, 288-990 l/h, 5 bar (Gear motor with integral frequency converter)									
		A32	1.5 kW, 19 - 66 rpm, 342-1,188 l/h, 5 bar (Gear motor with integral frequency converter)									
		A41	0.75 kW, 2 - 28 rpm, 36-504 l/h, 15 bar (Gear motor, external frequency converter required)									
		A42	1.1 kW, 3 - 46 rpm, 54-828 l/h, 5 bar (Gear motor, external frequency converter required)									
		A43	1.5 kW, 4 - 66 rpm, 72-1,188 l/h, 5 bar (Gear motor, external frequency converter required)									
			Hose material									
			0	NR								
			B	NBR								
			E	EPDM								
			R	NR-A								
			A	NBR-A								
			H	Hypalon								
				Hydraulic connections								
				I	DIN flange VA DN25							
				J	DIN flange PP DN25							
				K	DIN flange PVDF DN25							
				L	ANSI flange VA DN25							
					Base plate							
					0	Base plate, painted steel						
					1	Base plate, stainless steel						
					2	Portable unit + painted steel base plate						
					3	Portable unit + stainless steel base plate						
						Leakage sensor						
						0	without leakage sensor					
						L	with leakage sensor					
							Rotor					
							0	Rotor with 2 shoes				
								Batch controller				
								0	without controller			
									Special version			
									0	Standard		
										Vacuum system		
										0	without	
										V	with vacuum system	
											Approvals	
											01	CE

5.8 DULCO®flex

DULCO®flex Peristaltic Pump DFDa 032

DFDa	Type											
	032	DFDa 032, 0.62 l/revolution										
		Drive unit										
		000	without drive unit									
		B11	0.75 kW, 22 rpm, 818 l/h, 10 bar (fixed speed)									
		B12	1.1 kW, 22 rpm, 818 l/h, 15 bar (fixed speed)									
		B13	1.1 kW, 31 rpm, 1,153 l/h, 15 bar (fixed speed)									
		B14	1.1 kW, 38 rpm, 1,413 l/h, 10 bar (fixed speed)									
		B15	1.5 kW, 47 rpm, 1,748 l/h, 5 bar (fixed speed)									
		B16	1.5 kW, 55 rpm, 2,046 l/h, 5 bar (fixed speed)									
		B21	1.5 kW, 9 - 44 rpm, 334-1,636 l/h, 10 bar (manual adjustment gears)									
		B31	1.5 kW, 12 - 43 rpm, 446-1,599 l/h, 10 bar (Gear motor with integral frequency converter)									
		B32	2.2 kW, 19 - 66 rpm, 706-2,455 l/h, 5 bar (Gear motor with integral frequency converter)									
		B41	1.1 kW, 2 - 35 rpm, 74-1,302 l/h, 10 bar (Gear motor, external frequency converter required)									
		B42	1.5 kW, 2 - 35 rpm, 74-1,302 l/h, 15 bar (Gear motor, external frequency converter required)									
		B43	1.5 kW, 4 - 53 rpm, 148-1,971 l/h, 5 bar (Gear motor, external frequency converter required)									
		B44	2.2 kW, 7 - 80 rpm, 260-2,976 l/h, 5 bar (Gear motor, external frequency converter required)									
			Hose material									
			0	NR								
			B	NBR								
			E	EPDM								
			R	NR-A								
			A	NBR-A								
				Hydraulic connections								
				I	DIN flange VA DN32							
				J	DIN flange PP DN32							
				K	DIN flange PVDF DN32							
				L	ANSI flange VA DN32							
					Base plate							
					0	Base plate, painted steel						
					1	Base plate, stainless steel						
					2	Portable unit + painted steel base plate						
					3	Portable unit + stainless steel base plate						
						Leakage sensor						
						0	without leakage sensor					
						L	with leakage sensor					
							Rotor					
							0	Rotor with 2 shoes				
								Batch controller				
								0	without controller			
									Special version			
									0	Standard		
										Vacuum system		
										0	without	
										V	with vacuum system	
											Approvals	
											01	CE

5.8 DULCO®flex

DULCO®flex Peristaltic Pump DFDa 040

DFDa	Type											
	040	DFDa 040, 1.4 l/revolution										
		Drive unit										
		000	without drive unit									
		C11	1.1 kW, 21 rpm, 1,764 l/h, 10 bar (fixed speed)									
		C12	1.1 kW, 26 rpm, 2,184 l/h, 5 bar (fixed speed)									
		C13	1.5 kW, 21 rpm, 1,764 l/h, 15 bar (fixed speed)									
		C14	1.5 kW, 26 rpm, 2,184 l/h, 15 bar (fixed speed)									
		C15	1.5 kW, 38 rpm, 3,192 l/h, 10 bar (fixed speed)									
		C16	1.5 kW, 43 rpm, 3,612 l/h, 5 bar (fixed speed)									
		C17	2.2 kW, 48 rpm, 4,032 l/h, 5 bar (fixed speed)									
		C21	2.2 kW, 9 - 57 rpm, 756-4,788 l/h, 5 bar (manual adjustment gears)									
		C31	2.2 kW, 17 - 51 rpm, 1428-4,284 l/h, 5 bar (Gear motor with integral frequency converter)									
		C32	3.0 kW, 23 - 69 rpm, 1932-5,796 l/h, 5 bar (Gear motor with integral frequency converter)									
		C41	1.5 kW, 3 - 38 rpm, 252-3,192 l/h, 5 bar (Gear motor, external frequency converter required)									
		C42	2.2 kW, 3 - 38 rpm, 252-3,192 l/h, 10 bar (Gear motor, external frequency converter required)									
		C43	2.2 kW, 4 - 48 rpm, 336-4,032 l/h, 5 bar (Gear motor, external frequency converter required)									
		C44	3.0 kW, 5 - 69 rpm, 420-5,796 l/h, 5 bar (Gear motor, external frequency converter required)									
			Hose material									
			0	NR								
			B	NBR								
			E	EPDM								
			R	NR-A								
			A	NBR-A								
			H	Hypalon								
				Hydraulic connections								
				I	DIN flange VA DN40							
				G	Tri-Clamp, VA, 2"							
				H	DIN 11851, VA, NW50							
				J	DIN flange PP DN40							
				K	DIN flange PVDF DN40							
				L	ANSI flange VA DN40							
				M	ANSI flange PP DN40							
				N	ANSI flange PVDF DN40							
					Base plate							
					0	Base plate, painted steel						
					1	Base plate, stainless steel						
					2	Portable unit + painted steel base plate						
					3	Portable unit + stainless steel base plate						
						Leakage sensor						
						0	without leakage sensor					
						L	with leakage sensor					
							Rotor					
							0	Rotor with 2 shoes				
								Batch controller				
								0	without controller			
									Special version			
									0	Standard		
										Vacuum system		
										0	without	
										V	with vacuum system	
											Approvals	
											01	CE

5.8 DULCO®flex

DULCO®flex Peristaltic Pump DFDa 060

DFDa	Type											
	060	DFDa 060, 3.21 l/revolution										
		Drive unit										
		000	without drive unit									
		D11	2.2 kW, 21 rpm, 4 m^3/h, 5 bar (fixed speed)									
		D12	3.0 kW, 27 rpm, 5.2 m^3/h, 5 bar (fixed speed)									
		D13	4.0 kW, 21 rpm, 4 m^3/h, 15 bar (fixed speed)									
		D14	4.0 kW, 27 rpm, 5.2 m^3/h, 10 bar (fixed speed)									
		D15	4.0 kW, 32 rpm, 6.1 m^3/h, 5 bar (fixed speed)									
		D16	4.0 kW, 37 rpm, 7.1 m^3/h, 5 bar (fixed speed)									
		D17	5.5 kW, 47 rpm, 9.0 m^3/h, 5 bar (fixed speed)									
		D31	5.5 kW, 11 - 40 rpm, 2.1 - 7.7 m^3/h, 5 bar (Gear motor with integral frequency converter)									
		D32	7.5 kW, 19 - 66 rpm, 3.6 - 12.7 m^3/h, 5 bar (Gear motor with integral frequency converter)									
			Hose material									
			0	NR								
			B	NBR								
			E	EPDM								
			R	NR-A								
			A	NBR-A								
				Hydraulic connections								
				I	DIN Flansch VA DN65							
				L	ANSI flange VA DN65							
				J	DIN flange PP DN65							
				M	ANSI flange PP DN65							
				U	DIN flange VA, Halar coated + PVDF inserts DN65							
				V	ANSI flange VA, Halar coated + PVDF inserts DN65							
					Base plate							
					0	Base plate, painted steel						
					1	Base plate, stainless steel						
					2	Portable unit + painted steel base plate						
						Leakage sensor						
						0	without leakage sensor					
						L	with leakage sensor					
							Rotor					
							0	Rotor with 2 shoes				
								Batch controller				
								0	without controller			
									Special version			
									0	Standard		
										Vacuum system		
										0	without	
										V	with vacuum system	
											Approvals	
											01	CE

5.8 DULCO®flex

DULCO®flex Peristaltic Pump DFDa 070

DFDa	Type											
	070	DFDa 070, 6.66 l/revolution										
		Drive unit										
		000	without drive unit									
		E11	3.0 kW, 13.5 rpm, 5.3 m^3/h, 5 bar (fixed speed)									
		E12	4.0 kW, 18 rpm, 7.1 m^3/h, 5 bar (fixed speed)									
		E13	5.5 kW, 13.5 rpm, 5.3 m^3/h, 15 bar (fixed speed)									
		E14	5.5 kW, 26 rpm, 10.3 m^3/h, 5 bar (fixed speed)									
		E15	7.5 kW, 18 rpm, 7.1 m^3/h, 15 bar (fixed speed)									
		E16	7.5 kW, 26 rpm, 10.3 m^3/h, 10 bar (fixed speed)									
		E17	7.5 kW, 32 rpm, 12.7 m^3/h, 5 bar (fixed speed)									
		E18	7.5 kW, 40 rpm, 15.9 m^3/h, 5 bar (fixed speed)									
			Hose material									
			0	NR								
			B	NBR								
			E	EPDM								
			R	NR-A								
			A	NBR-A								
			H	Hypalon								
				Hydraulic connections								
				I	DIN flange VA DN65							
				J	DIN flange PP DN65							
				L	ANSI flange VA DN65							
				M	ANSI flange PP DN65							
				Q	DIN flange VA Halar coated DN65							
				R	ANSI flange VA Halar coated DN65							
					Base plate							
					0	Base plate, painted steel						
					1	Base plate, stainless steel						
						Leakage sensor						
						0	without leakage sensor					
						L	with leakage sensor					
							Rotor					
							0	Rotor with 2 shoes				
								Batch controller				
								0	without controller			
									Special version			
									0	Standard		
										Vacuum system		
										0	without	
										V	with vacuum system	
											Approvals	
											01	CE

5.8 DULCO®flex

DULCO®flex Peristaltic Pump DFDa 100

DFDa	Type											
	100	DFDa 100, 20.0 l/revolution										
		Drive unit										
		000	without drive unit									
		F11	7.5 kW, 12.5 rpm, 15 m^3/h, 5 bar (fixed speed)									
		F12	11 kW, 17.6 rpm, 21.1 m^3/h, 5 bar (fixed speed)									
		F13	15 kW, 12.5 rpm, 15 m^3/h, 15 bar (fixed speed)									
		F14	15 kW, 17.6 rpm, 21.1 m^3/h, 10 bar (fixed speed)									
		F15	15 kW, 20 rpm, 24 m^3/h, 7.5 bar (fixed speed)									
		F16	15 kW, 27.7 rpm, 33 m^3/h, 5 bar (fixed speed)									
		F17	18.5 kW, 30 rpm, 36 m^3/h, 5 bar (fixed speed)									
			Hose material									
			0	NR								
			B	NBR								
			E	EPDM								
			H	Hypalon								
				Hydraulic connections								
				I	DIN flange VA DN100							
				J	DIN flange PP DN100							
				L	ANSI flange VA DN100							
				M	ANSI flange PP DN100							
				Q	DIN flange VA Halar coated DN100							
				R	ANSI flange VA Halar coated DN100							
					Base plate							
					0	Base plate, painted steel						
						Leakage sensor						
						0	without leakage sensor					
						L	with leakage sensor					
							Rotor					
							0	Rotor with 2 shoes				
								Batch controller				
								0	without controller			
									Special version			
									0	Standard		
										Vacuum system		
										0	without	
										V	with vacuum system	
											Approvals	
											01	CE

5.8.6 Spare parts

Spare parts for DFAa 003

	Order no.
DFAa 003 silicone tube	1037107
DFAa 003 Norprene tube A-60-F	1037144
DFAa 003 Solva tube	1037145

Spare parts for DFAa 008

	Order no.
DFAa 008 silicone tube	1037146
DFAa 008 Norprene tube A-60-G	1037147
DFAa 008 silicone tube	1037148
DFAa 008 Solva tube	1037149

Spare parts for DFBa 010

	Order no.
DFBa 010 NR tube	1037150
DFBa 010 NBR tube	1037151
DFBa 010 EPDM tube	1037152
DFBa 010 NR-A tube	1037153
DFBa 010 NBR-A tube	1037154
DFBa 010 NORPRENE tube	1037155
DFBa 010 HYPALON tube	1037156

Spare parts for DFBa 013

	Order no.
DFBa 013 NR tube	1037157
DFBa 013 NR tube	1037158
DFBa 013 EPDM tube	1037159
DFBa 013 NR-A tube	1037160
DFBa 013 NBR-A tube	1037161
DFBa 013 NORPRENE tube	1037162
DFBa 013 HYPALON tube	1037163

Spare parts for DFBa 016

	Order no.
DFBa 016 NR tube	1037164
DFBa 016 NR tube	1037165
DFBa 016 EPDM tube	1037166
DFBa 016 NR-A tube	1037167
DFBa 016 NBR-A tube	1037168
DFBa 016 NORPRENE tube	1037169
DFBa 016 TYGON tube	1037170
DFBa 016 HYPALON tube	1037171

5.8 DULCO®flex

Spare parts for DFBa 019

	Order no.
DFBa 019 TYGON tube	1037172
DFBa 019 NORPRENE tube	1037173

Spare parts for DFBa 022

	Order no.
DFBa 022 NR tube	1037175
DFBa 022 NR tube	1037176
DFBa 022 EPDM tube	1037178
DFBa 022 NR-A tube	1037179
DFBa 022 NBR-A tube	1037180
DFBa 022 NORPRENE tube	1037181
DFBa 022 HYPALON tube	1037182

Spare parts for DFCa 030

	Order no.
DFCa 030 NR tube	1037183
DFCa 030 NBR tube	1037184
DFCa 030 EPDM tube	1037185
DFCa 030 NR-A tube	1037186
DFCa 030 NBR-A tube	1037187
DFCa 030 HYPALON tube	1037188

Spare parts for DFCa 040

	Order no.
DFCa 040 NR tube	1037192
DFCa 040 NBR tube	1037193
DFCa 040 EPDM tube	1037194
DFCa 040 NR-A tube	1037195
DFCa 040 NBR-A tube	1037196
DFCa 040 HYPALON tube	1037197
DFCa 040 NORPRENE tube	1037198

Spare parts for DFCa 050

	Order no.
DFCa 050 NR tube	1037199
DFCa 050 NBR tube	1037201
DFCa 050 EPDM tube	1037202
DFCa 050 NR-A tube	1037203
DFCa 050 NBR-A tube	1037204
DFCa 050 HYPALON tube	1037205

Spare parts for DFCa 060

	Order no.
DFCa 060 NR tube	1037206
DFCa 060 NBR tube	1037208
DFCa 060 EPDM tube	1037209
DFCa 060 NR-A tube	1037210
DFCa 060 NBR-A tube	1037211
DFCa 060 HYPALON tube	1037212

Spare parts for DFCa 070/70D

	Order no.
DFCa 070/70D NR tube	1037213
DFCa 070/70D NBR tube	1037214
DFCa 070/70D EFDM tube	1037215
DFCa 070/70D NR-A tube	1037216
DFCa 070/70D NBR-A tube	1037217
DFCa 070/70D HYPALON tube	1037218

Spare parts for DFDa 025

	Order no.
DFDa 025 NR tube	1037219
DFCa 025 NBR tube	1037220
DFDa 025 EPDM tube	1037221
DFDa 025 NR-A tube	1037222
DFDa 025 NBR-A tube	1037223
DFDa 025 HYPALON tube	1037224

Spare parts for DFDa 032

	Order no.
DFDa 032 NR tube	1037225
DFCa 032 NBR tube	1037226
DFDa 032 EPDM tube	1037227
DFDa 032 NR-A tube	1037228
DFDa 032 NBR-A tube	1037229

Spare parts for DFDa 040

	Order no.
DFDa 040 NR tube	1037230
DFCa 040 NBR tube	1037231
DFDa 040 EPDM tube	1037232
DFDa 040 NR-A tube	1037233
DFDa 040 NBR-A tube	1037234
DFDa 040 HYPALON tube	1037235

5.8 DULCO®flex

Spare parts for DFDa 060

	Order no.
DFDa 060 NR tube	1037236
DFCa 060 NBR tube	1037237
DFDa 060 EPDM tube	1037238
DFDa 060 NR-A tube	1037239
DFDa 060 NBR-A tube	1037240

Spare parts for DFDa 070

	Order no.
DFDa 070 NR tube	1037241
DFCa 070 NBR tube	1037242
DFDa 070 EPDM tube	1037243
DFDa 070 NR-A tube	1037244
DFDa 070 NBR-A tube	1037245
DFDa 070 Hypalon tube	1037246

Spare parts for DFDa 100

	Order no.
DFDa 100 NR tube	1037247
DFCa 100 NBR tube	1037248
DFDa 100 EPDM tube	1037249
DFDa 100 Hypalon tube	1037250

5.9 Application Examples

5.9.1 Metering Polymers

Product:	**Eccentric screw pump Spectra**
Metering medium:	**Polymer, liquid concentrate**
Industry:	**Waste water**
Application:	**Treatment of flocculants**

Production of a 0.5% polymer solution with the Ultromat® AFT 2000 and Spectra 12/33 F. The Spectra pump feeds the polymer concentrate from the disposable container to the Ultromat®.

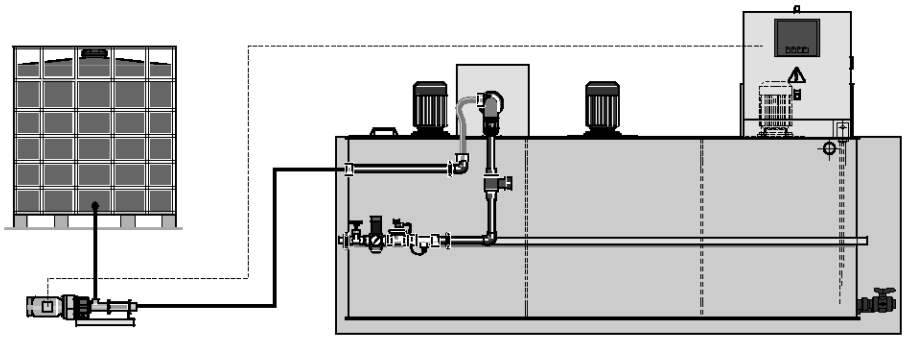

AP_0001_SW3

Task and requirements

Preparation of a 0.1 – 0.5 % polymer solution.

Operating conditions

- Fluctuating water feed
- Automatic activation of progressive cavity pump
- Highly viscous medium

Application information

- Gauge capacity of progressive cavity pump during initial operation
- Provide dry-running protection facility for progressive cavity pump
- Proportional metering of liquid polymer as a function of water feed
- Activation of progressive cavity pump by means of a frequency converter

Solution

- Spectra 12/33 F progressive cavity pump for metering liquid concentrate
- ULFa 2000 Ultromat for preparing a 0.1 – 0.5 % polymer solution

Benefits

- Constant solution concentration also in connection with fluctuating water feed
- Fully automatic operation with minimum personnel and maintenance requirements
- Flexible process configuration by adapting the pump to different concentration requirements

5.9 Application Examples

5.9.2 Filling a Day Tank

Product:	**von Taine® centrifugal pump**
Metered medium:	**32 % hydrochloric acid solution**
Sector:	**Food**
Application:	**Chemical transfer**

The von Taine® centrifugal pump is switched on and off automatically by the level control facility in the day tank.

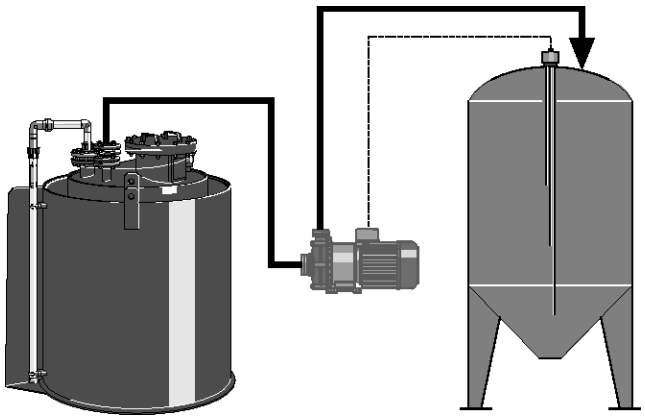

pk_3_050

Task and requirements

- Automatically filling service tanks with 32 % hydrochloric acid solution

Operating conditions

- Indoor operation
- Automatic activation of pump

Application information

- Centrifugal pump controlled by level control facility in metering tank
- The centrifugal pump is not self-priming and requires feed
- Hydrochloric acid compatibility of materials must be ensured (PP, PVDF; EPDM)
- Provide dry-running protection facility for centrifugal pump

Solution

- vonTaine® 1820 PP centrifugal pump
- Service tank with level control

Benefits

- Safe handling of hydrochloric acid
- Fully automatic operation with minimum personnel and maintenance requirements

5.9 Application Examples

5.9.3 Filling Day Tanks

Product:	**Duodos air operated diaphragm pump**
Metered medium:	**Detergent**
Sector:	**Laundry**
Application:	**Chemical transfer**

The level control facility for the day tanks opens the solenoid valves when the level drops below minimum. With decreasing backpressure, the Duodos pump automatically begins to pump medium into the metering line and switches off when the maximum level in the tank is reached and the solenoid valve is switched off.

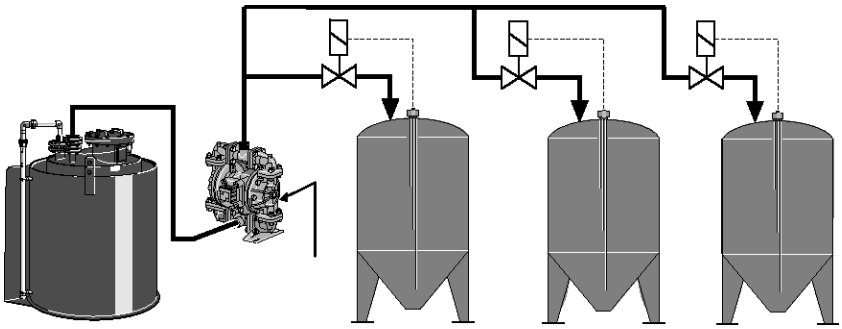

pk_3_051

Task and requirements

- Automatic filling of day tanks with detergent

Operating conditions

- Compressed air necessary for operating compressed air diaphragm pump
- Automatic filling of day tanks

Application information

- Compressed air diaphragm-type pump controlled by level control facility in metering tank
- The compressed air diaphragm pump is self-priming
- Also suitable for viscous media
- The level control facility for the day tanks opens the solenoid valves when the level drops below minimum. With decreasing backpressure, the compressed air diaphragm-type pump automatically begins to pump medium into the metering line and switches off when the maximum level in the tank is reached and the solenoid valve is switched off

Solution

- Duodos air operated diaphragm pump
- Day tank with level control

Benefits

- Simplified logistics through central storage
- Fully automatic operation with minimum personnel and maintenance requirements

5.9 Application Examples

5.9.4 Deacidification of drinking water

Product	**Peristaltic Pump DULCO®flex**
Feed chemical	**Lime milk 10 %**
Sector:	**Drinking water**
Application	**Feed of abrasive chemicals**

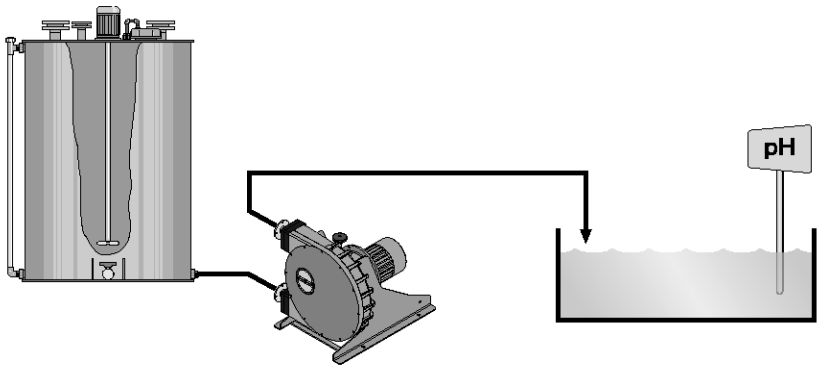

AP_PTW_0001_SW

Problems and requirements

- Feed of abrasive lime milk into drinking water tanks
- Deacidification of the drinking water

Operating conditions

- The lime milk comes as a 10% suspension
- The pH in the application tank is continuously measured

Notes on use

- The peristaltic pump is self-priming
- The pump is controlled by a pH measuring unit
- Speed reduction to extend the service life of the hose

Solution

- Peristaltic pump of the DULCO®flex DFCa 040 type
- Hose material: NR (natural rubber)

Benefits

- Reliable feed of lime milk
- Fully automatic operation with minimum personnel and maintenance requirements

6 Panel-Mounted Measuring/Control Stations

Contents **Page**

6.0 Overview Panel-Mounted Measuring/Control Stations 1
6.0.1 Product Overview 1
6.0.2 Selection Guide 3
6.0.3 DULCOTROL® Ordering System 3

6.1 DULCOTROL® Drinking Water/F&B 5
6.1.1 DULCOTROL® Drinking Water/F&B Ordering System 5
6.1.2 Identcode Ordering System 6
6.1.3 Technical Description Of The Delivery Scope Of DULCOTROL® Drinking Water/F&B 12

6.2 DULCOTROL® Cooling Water 15
6.2.1 DULCOTROL® Cooling Water 15
6.2.2 Identcode Ordering System 16
6.2.3 Technical Description Of The Delivery Scope Of DULCOTROL® Cooling Water 22

6.3 DULCOTROL® Waste Water 25
6.3.1 DULCOTROL® Waste Water 25
6.3.2 Identcode Ordering System 26
6.3.3 Technical Description Of The Delivery Scope Of DULCOTROL® Waste Water 32

6.4 DULCOTROL® Free Chlorine – pH-independent 35
6.4.1 DULCOTROL® Free Chlorine – pH-independent 35
6.4.2 Identcode Ordering System 36
6.4.3 Technical Description Of The Delivery Scope DULCOTROL® Free Chlorine, pH-independent 37

6.0 Overview Panel-Mounted Measuring/Control Stations

6.0.1 Product Overview

DULCOTROL® Panel-Mounted Measuring/Control Stations

DULCOTROL® measuring/control stations are complete and compact online process measuring/control stations mounted on a PE panel that can be placed as plug & play modules in a process water bypass. They are sub-divided into the following product ranges that are assigned to key water treatment applications and include components tailored to the target application.

- DULCOTROL® Drinking Water/F&B
- DULCOTROL® Cooling Water
- DULCOTROL® Waste Water

With these product ranges, 1-3 measured variables can be configured specifically to the sample water on one panel. The measuring devices can be fitted with a measuring function or a range of different control functions as required. A compatible filter, pressure reducer, heat exchanger, a sample water pump and a peristaltic pump can optionally be ordered for sample water treatment. Measurement panels for more than two controllers include a terminal box for a safe electrical wiring. All of the connection cabling is routed through a cable duct.

- DULCOTROL® Free Chlorine - pH-independent

This product range enables free chlorine to be measured/controlled at high or unstable pH values in all applications with clear water. To do so, a pH buffer solution is metered into the sample water bypass using a peristaltic pump.

The required design of the measuring points can be simply configured with all DULCOTROL® product ranges via a user-orientated identcode system.

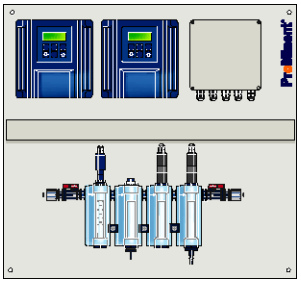

pk_6_200_c

DULCOTROL® Drinking Water/F&B

The measuring/control stations DULCOTROL® drinking water/F&B are specifically designed for the drinking water industry as well as the food and beverages industry (F&B = Food&Beverage). Furthermore, the special requirements are met which are given on the part of the drinking water / product water treatment and the rinsing water, service water, and process water treatment.

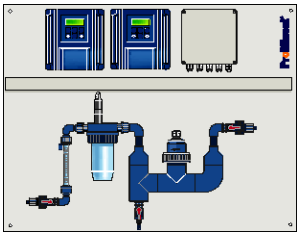

pk_6_201_c

DULCOTROL® Cooling Water

The measuring/control stations DULCOTROL® cooling water are used in all industry segments where cooling water is treated. The following applications are covered:

- In the closed cooling circuit, the conditioning of the cooling water through pH value adjustment, metering of corrosion inhibitors, and the disinfection of the cooling water with non-oxidative biocides and oxidative disinfectants.
- In the open cooling circuit (cooling tower), in addition to the functions mentioned above the automatic desalination (blow down) of the cooling water.

6.0 Overview Panel-Mounted Measuring/Control Stations

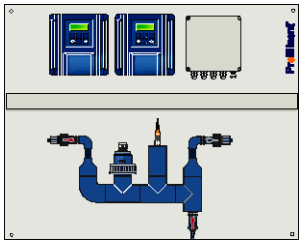

pk_6_202_c

DULCOTROL® Waste Water

The measuring/control stations DULCOTROL® waste water are used in all industry segments where waste water is treated. The following applications may e.g. be covered:

- pH neutralisation and pH value adjustment
- Disinfection of clarified water
- Decontamination of waste water by eliminating reductives and oxidants
- Monitoring of rinsing water
- Desalination of process water
- Control of the dissolved oxygen in the biologic clarification stage

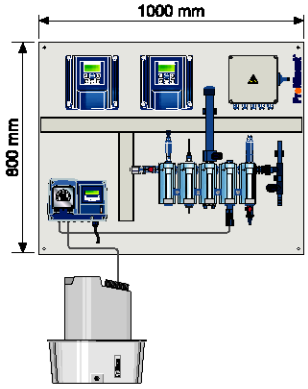

P_DCT_0023_C1

DULCOTROL® Free chlorine - pH-independent

The measuring/control station DULCOTROL® free chlorine - pH independent is used wherever free chlorine requires measuring and in applications where pH values are either unstable or higher than 8.0.

The pH value can be lowered and stabilised during measuring by metering a pH buffer solution. The measuring station is designed for uncontaminated water.

6.0 Overview Panel-Mounted Measuring/Control Stations

6.0.2 Selection Guide

Measuring, control, monitoring tasks in water treatment

DULCOTROL® drinking water/F&B	DULCOTROL® cooling water	DULCOTROL® waste water
Treatment of drinking water, water of quality similar to drinking water as well as of rinsing water, industrial water and process water treatment through ■ Disinfection ■ CIP ■ pH value adjustment ■ Monitoring	Treatment of cooling water in open cooling circuits and closed cooling circuits ■ Desalination ■ Disinfection ■ pH value adjustment ■ Metering of corrosion inhibitors	Treatment of industrial and municipal waster waters ■ pH neutralisation ■ Disinfection ■ Decontamination ■ Desalination of process waters ■ Controlling of dissolved oxygen ■ Monitoring

DULCOTROL® Free Chlorine - pH-independent

All applications with clear, uncontaminated water where there are unstable pH values or pH values of > 8.0.

6.0.3 DULCOTROL® Ordering System

The DULCOTROL® measuring/control stations are available in three series assigned to the applications drinking water/F&B, cooling water, and waste water. The measuring/control stations can be configured through the relevant Identcode order system. The DULCOTROL® order system is based on user-related selection criteria such that the right measuring/control station can be selected without necessitating any technical knowledge. In all series, up to a maximum of 3 measured variables can be configured. In the following, the Identcode features of the Identcode are explained in detail. The features apply to all DULCOTROL® measuring/control stations. If required, the content described in the features is explained in the individual DULCOTROL® series. The scope of delivery of the technical components for a certain selection is also specified there.

Feature: "Measured variable"

This determines the parameter to be measured or controlled (e.g. pH or chlorine). Up to three measurement parameters can be simultaneously selected depending on the given options. This determines the sensor class (e.g. pH electrode or chlorine sensor) and the controller suitable for the measured variable as well as the corresponding measuring cable.

Feature: "Water to be measured"

This facilitates a characterisation of the sample water (e.g. "clear water" or "turbid water") in addition to the main application (e.g. drinking water, cooling water, waste water). Together with the main application, the exact sensor type and the measuring range (e.g. CLE 3-mA-2ppm), the sensor fitting (e.g. DGMA) are specified. The price assigned to this feature also includes the piping. In some cases, the selection of the water to be measured (e.g. rinsing water / service water / process water, T > 45 °C and <55 °C) also necessitates a selection of the accessories which is stated in the Identcode as separate feature (e.g. heat exchanger). These cases are correspondingly referenced in the order system.

Feature: "Usage category"

The feature "usage category" determines whether the measuring unit assigned to a measured variable

- Either can only measure
- Or is to have additional control functionality. In this respect, "two-way controlling" means that the controller can both increase and decrease the measured variable. For this purpose, the controller D1Ca is assigned with full control functionality.

In case of several measured variables, the following type of application is also given:

- One-way controlling: this means that the controller may either increase or decrease the measured variable. For this purpose, the controller D2C is assigned. For this reason, only the measured variable combinations can be selected for which a D2C controller exists. These are appropriately specified in the order system. To be noted is the limited functionality of the D2C controller as compared to the D1C controller described in Chapter 7.

In the ordering system, various configurations of measurement and control functions are offered to suit the combination of several measured variables.

6.0 Overview Panel-Mounted Measuring/Control Stations

Feature: "Electrical connection"

This feature determines the voltage supply of the measuring/control station. The electrical connection is made by the user via the "terminal" of the measuring/control station. Measuring/control panels for several measured variables include a terminal box.

Feature: "Sensor equipment"

This feature determines whether the measuring/control panel is supplied with or without sensors. The option "without sensors" should be chosen if the standard sensor types cannot be used (e.g.: non-applicable measuring range) or if a warehousing of the measuring panels is intended.

Feature: "Design"

This feature determines whether and which label is to be affixed to the panel. For DULCOTROL® drinking water/F&B, the components can in addition be installed in a stainless steel cabinet.

Feature: "Sample water treatment"

This feature determines whether a filter ready for connection is included. It is installed by the customer upstream of the measurement/control station. Likewise, a peristaltic pump can also be selected for metering pH buffer solution into the sample water bypass.

Feature: "Accessories"

This feature defines the accessories such as e.g. pressure reducer or sample water pump. These components are delivered together with the measuring and control panel, however, will be installed by the customer external to the panel.

Feature: "Language"

This feature determines the operating language of the measuring/control station.

Feature : "Approval"

This feature states the existing approvals, certificates.

6.1 DULCOTROL® Drinking Water/F&B

6.1.1 DULCOTROL® Drinking Water/F&B Ordering System

The measuring/control stations DULCOTROL® drinking water/F&B are specifically designed for the drinking water industry as well as the food and beverages industry. Furthermore, the special requirements are met which are given on the part of the drinking water / product water treatment and the rinsing water, service water, and process water treatment.

In the following Identcode, the feature "water to be measured" is thus differentiated into:

- "Drinking/product water treatment": this means the final treatment (e.g. disinfection) of water similar to drinking water as performed in the production of drinking water or in the production of beverages or food
- Rinsing/service/process water: this includes e.g. all rinsing processes in the food and beverages industry aimed at the cleaning and disinfection of pipings, vessels and machines or process or industrial water with a higher level of contamination.

6.1 DULCOTROL® Drinking Water/F&B

6.1.2 Identcode Ordering System

DULCOTROL® Drinking Water/F&B - One Measured Variable

PWCA	Measured variable	
	C000	Free chlorine (at pH-value < 8.0)
	G000	Total chlorine (free+combined chlorine)
	P000	pH
	R000	ORP
	D000	Chlorine dioxide
	I000	Chlorite
	L000	Conductivity (only "water to be measured" 1)
	Z000	Ozone
	F000	Fluoride (pH min.= 5.5, pH max. = 8.5)
	H000	Hydrogen peroxide
	A000	Peracetic acid
	X000	Dissolved oxygen
	T000	Temperature
	Water to be measured	
	1	Drinking water / product water, T< 45 °C
	2	Rinsing water / service water / process water, T< 45 °C
	3	Drinking water / product water T> 45 °C and < 55 °C (only measured variable D000, H000, A000, others only with accessory: heat exchanger)
	4	Rinsing water / service water / process water T> 45 °C and <55 °C (only measured variable D000, H000, A000, others only with accessory: heat exchanger)
	5	Drinking water / product water T> 55 °C and <80 °C (only with accessory: heat exchanger)
	6	Rinsing water / Industrial water / process water T> 55 °C and <80 °C (only with accessory: heat exchanger)
		Usage category
		0 All measured variables only measurable
		9 All measured variables two-way controllable
		Power supply
		A 230 V, 50/60 Hz
		C 115 V, 50/60 Hz
		Sensor equipment
		0 With sensors
		1 Without sensors
		Version
		0 With ProMinent Logo
		2 Stainless steel cabinet
		Sample water treatments
		0 None
		1 With filter
		Accessories
		0 None
		1 With pressure reducer
		2 With heat exchanger
		3 With sample water pump
		4 With pressure reducer and heat exchanger
		6 With heat exchanger and sample water pump
		Language
		DE German
		EN English
		FR French
		IT Italian
		NL Dutch
		ES Spanish, not for H000 / A000
		PL Polish, not for H000 / A000
		SV Swedish, not for H000 / A000
		HU Hungarian, not for H000 / A000
		PT Portuguese, not for H000 / A000
		CS Czech, not for H000 / A000
		Approvals
		1 CE

6.1 DULCOTROL® Drinking Water/F&B

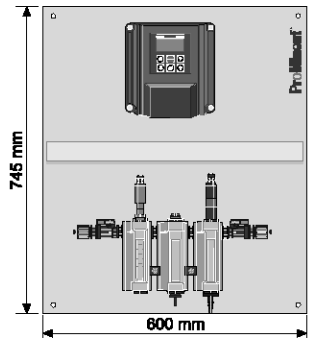

P_DCT_0024_SW_NEU

Examples

Example 1: PWCA_D000_1_0_A_0_0_0_0_EN_1:

Measuring of chlorine dioxide in drinking water / product water.

Controller:

- D1CA_W_0_D_1_0_0_1_4_G_0_0_0_EN

Sensor fitting:

- DGM_A_3_1_1_T_0_0_0:
  1 Measuring module: Chlorine dioxide sensor, 1 empty measuring module for refitting of temperature,
  1 Flow monitoring module

Sensors:

- CDE-2-mA 0.5 ppm

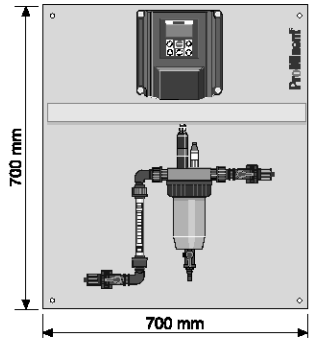

P_DCT_0029_SW_1

Example 2: PWCA_D000_6_9_A_0_0_1_2_EN_1:

Chlorine dioxide control in turbid and hot rinsing water (> 55 °C) in a bottle rinsing plant. A filter and a heat exchanger that are installed outside the panel are included in the scope of delivery.

Controller:

- D1CA_W_0_D_1_2_1_1_4_M_2_2_0_EN

Sensor fitting:

- DLG III for chlorine dioxide and temperature + flow monitoring

Sensors:

- CDP 1-mA-2 ppm
- PT 100

External to the panel (not shown), accessories:

- Filter
- Heat exchanger

6.1 DULCOTROL® Drinking Water/F&B

DULCOTROL® Drinking Water/F&B - Two Measured Variables

PWCA	Measured variable										
	CP00	1. Free chlorine / 2. pH (at pH-value < 8.0)									
	CR00	1. Free chlorine / 2. ORP (at pH-value < 8.0)									
	GP00	1. Total chlorine / 2. pH (free+combined chlorine)									
	RP00	1. ORP / 2. pH									
	HP00	1. Hydrogen peroxide / 2. pH									
	FP00	1. Fluoride / 2. pH (pH min.= 5.5, pH max. = 8.5)									
	AP00	1. Peracetic acid / 2. pH									
	LP00	1. Conductivity / 2. pH									
	AL00	1. Peracetic acid / 2. conductivity									
	DP00	1. Chlorine dioxide / 2. pH									
	DR00	1. Chlorine dioxide / 2. ORP									
	DI000	1. Chlorine dioxide / 2. chlorite (only "water to be measured" 1, 3, 5)									
	ZR00	1. Ozone / 2. ORP									
		Water to be measured									
		1	Drinking water / product water, T< 45 °C								
		2	Rinsing water / service water / process water, T< 45 °C								
		3	Drinking water / product water, T> 45 °C and < 55 °C (only measured variable RP00, HP00, AP00, LP00, AL00, DP00, DR00, others only with accessory: heat exchanger)								
		4	Rinsing water / service water / process water, T> 45 °C and < 55 °C (only measured variable RP00, HP00, AP00, LP00, AL00, DP00, DR00, others only with accessory: heat exchanger)								
		5	Drinking water / product water, T> 55 °C and < 80 °C(only with accessory: heat exchanger)								
		6	Rinsing water / industrial water / process water, T> 55 °C and < 80 °C(only with accessory: heat exchanger)								
			Usage category								
			0	All measured variables only measurable							
			1	1st measured variable two-way controllable, 2nd measured variable only measurable							
			2	2nd measured variable two-way controllable, 1st measured variable only measurable							
			3	Both measured variables one-way controllable with two-channel controller D2C (only for CP00, GP00, RP00, DP00)							
			9	All measured variables two-way controllable							
				Power supply							
				A	230 V, 50/60 Hz						
				C	115 V, 50/60 Hz						
					Sensor equipment						
					0	With sensors					
					1	Without sensors					
						Version					
						0	With ProMinent logo				
						2	Stainless steel cabinet				
							Sample water treatments				
							0	None			
							1	With filter			
								Accessories			
								0	None		
								1	With pressure reducer		
								2	With heat exchanger		
								3	With sample water pump		
								4	With pressure reducer and heat exchanger		
								6	With heat exchanger and sample water pump		
									Language		
									DE	German	
									EN	English	
									FR	French	
									IT	Italian	
									NL	Dutch	
									ES	Spanish, not for H and A in HP00 / AP00/ AL00	
									PL	Polish, not for H and A in HP00 / AP00/ AL00	
									SV	Swedish, not for H and A in HP00 / AP00/ AL00	
									HU	Hungarian, not for H and A in HP00 / AP00/ AL00	
									PT	Portuguese, not for H and A in HP00 / AP00/ AL00	
									CS	Czech, not for H and A in HP00 / AP00/ AL00	
										Approvals	
										1	CE

6.1 DULCOTROL® Drinking Water/F&B

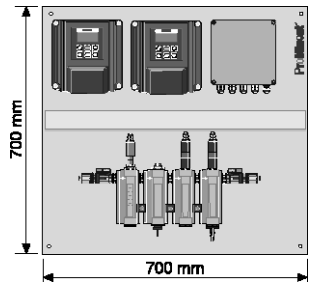

pk_6_200

Examples

Example 1: PWCA_DI00_1_1_A_0_0_0_1_EN_1:

Measuring of chlorine dioxide and chlorite in drinking water / product water. The scope of delivery includes a pressure reducer which is installed externally to the panel.

Controller:

- D1CA_W_0_I_1_0_0_1_4_G_0_0_0_EN
- D1CA_W_0_D_1_0_0_1_4_G_0_0_0_EN
  + terminal box on the panel

Sensor fitting:

- DGM_A_3_1_2_T_0_0_2 :
  2 measuring modules for chlorine dioxide and chlorite sensors, 1 empty measuring module for refitting of temperature, 1 flow monitoring module

Sensors:

- CDE-2-mA 0.5ppm
- CLT 1-mA-0.5ppm

External to the panel (not shown), accessories:

- Pressure reducer

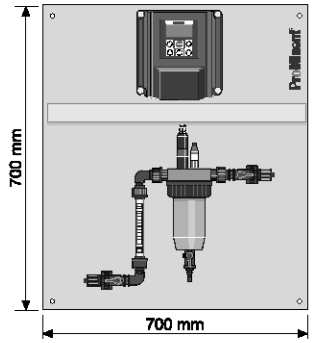

P_DCT_0029_SW

Example 2: PWCA_CP00_6_3_A_0_0_1_6_EN_1

One-way control of pH and chlorine in hot rinsing water (> 55 °C). A filter, a heat exchanger and a sample water pump that are installed outside the panel are included in the scope of delivery.

Controller:

- D2CA_W_0_PC_5_2_0_4_M_2_0_EN

Sensor fitting:

- DLG III for pH and chlorine+ flow monitoring

Sensors:

- CLE-3-mA 2ppm
- PHER 112-SE

External to the panel (not shown), accessories:

- Filter
- Sample water pump
- Heat exchanger

6.1 DULCOTROL® Drinking Water/F&B

DULCOTROL® Drinking Water/F&B - Three Measured Variables

PWCA	Measured variable	
	CPL0	1. Free chlorine / 2. pH / 3. conductivity (at pH-value < 8.0)
	CRP0	1. Free chlorine / 2. ORP / 3. pH (at pH-value < 8.0)
	GPL0	1. Total chlorine / 2. pH / 3. conductivity (free+combined chlorine)
	GRP0	1. Total chlorine / 2. ORP / 3. pH (free+combined chlorine)
	RPL0	1. ORP / 2. pH / 3. conductivity
	DPR0	1. Chlorine dioxide / 2. pH / 3. ORP (with "water to be measured": 2,4,6 only with manual temperature compensation)
	DPI0	1. Chlorine dioxide / 2. pH / 3. chlorite (only "water to be measured": 1,3,5)
	DRI0	1. Chlorine dioxide / 2. ORP / 3. chlorite (only "water to be measured": 1,3,5)
	ZPR0	1. Ozone / 2. pH / 3. ORP
	ALP0	1. Peracetic acid / 2. conductivity / 3. pH

Water to be measured	
1	Drinking water / product water, T< 45 °C
2	Rinsing water / industrial water / process water, T< 45 °C
3	Drinking water / product water, T> 45 °C and < 55 °C (only measured variable RPL0, DPR0, ALP0
4	Rinsing water / industrial water / process water, T> 45 °C and < 55 °C (only measured variable RPL0, DPR0, ALP0
5	Drinking water / product water, T> 55 °C and < 80 °C(only with accessory: heat exchanger)
6	Rinsing water / industrial water / process water, T> 55 °C and < 80 °C(only with accessory: heat exchanger)

Usage category	
0	All measured variables only measurable
4	1st measured variable two-way controllable, 2nd + 3rd measured variable only measurable
5	2nd measured variable two-way controllable, 1st + 3rd measured variable only measurable
6	1st + 2nd measured variable one-way controllable with two-channel controller D2C and 3rd measured variable only measurement (only for CPL0, GPL0, RPL0, DPR0, DPI0)
7	1st measured variable two-way controllable, 2nd +3rd measured variable one-way controllable with two-channel controller D2C (only for CRP0, GRP0, DPR0, ZPR0)
9	All measured variables two-way controllable

Power supply	
A	230 V, 50/60 Hz
C	115 V, 50/60 Hz

Sensor equipment	
0	With sensors
1	Without sensors

Version	
0	With ProMinent logo
2	Stainless steel cabinet

Sample water treatments	
0	None
1	With filter

Accessories	
0	None
1	With pressure reducer
2	With heat exchanger
3	With sample water pump
4	With pressure reducer and heat exchanger
6	With heat exchanger and sample water pump

Language	
DE	German
EN	English
FR	French
IT	Italian
NL	Dutch
ES	Spanish, not for A in ALP0
PL	Polish, not for A in ALP0
SV	Swedish, not for A in ALP0
HU	Hungarian, not for A in ALP0
PT	Portuguese, not for A in ALP0
CS	Czech, not for A in ALP0

Approvals	
1	CE

6.1 DULCOTROL® Drinking Water/F&B

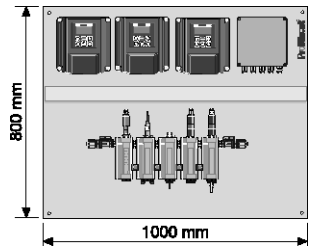

pk_6_206

Examples

Example 1: PWCA_DRI0_5_4_A_0_0_0_2_EN_1

Two-way controlling of chlorine dioxide and measuring of chlorite and pH in hot drinking water / product water (> 55 °C). The scope of delivery includes a heat exchanger which is installed externally to the panel.

Controller:

- D1CA_W_0_D_1_2_1_1_4_M_2_2_0_EN
- D1CA_W_0_I_1_0_0_1_4_G_0_0_0_EN
- D1CA_W_0_P_5_2_0_1_4_G_0_0_0_EN
  + terminal box on the panel

Sensor fitting:

- DGM_A_3_2_2_T_0_0_2 :
  2 Measuring module chlorine dioxide and chlorite sensors and 1 measuring module pH sensor, 1 empty measuring module for refitting of temperature, 1 flow monitoring module

Sensors:

- CDE2-mA-0.5ppm
- CLT 1-mA-0.5ppm
- PHEP 112 SE

External to the panel, accessory:

- Heat exchanger

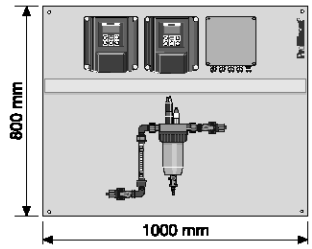

P_DCT_0028_SW

Example 2: PWCA_CPL0_2_6_A_0_0_1_0_EN_1

One-way controlling of pH and chlorine and measuring of conductivity in turbid rinsing water. The scope of delivery includes a heat exchanger which is installed externally to the panel.

Controller:

- D2CA_W_0_PC_5_2_0_4_M_2_0_EN
- D1CA_W_0_L_6_2_0_1_4_G_0_0_0_EN
  + terminal box on the panel

Sensor fitting:

- DLG III for pH and chlorine + flow monitoring

Sensors:

- CLE-3-mA 2ppm
- PHEP 112-SE
- ICT2 + milk tube fitting mounted external to the panel

Accessories, outside the panel (not illustrated):

- Filter

6.1 DULCOTROL® Drinking Water/F&B

6.1.3 Technical Description Of The Delivery Scope Of DULCOTROL® Drinking Water/F&B

Controller

(for detailed information see chap. Measuring And Control Technology)

The Identcode features "measured variable" and "usage category" determine the equipment of the measuring/control device.

The Identcode specification **"measurable"** determines the following version of the **D1CA measuring unit:**

- Connection of a correction variable
- Two limit value relays
- Control input "Pause"
- Two freely programmable standard signal outputs

The Identcode feature **"two-way controllable"** determines the following version of the **D1CA controller** in addition to the properties listed in **"measurable"**:

- Feedforward control
- Alarm and 2 solenoid valve relays
- Control of two pumps
- PID Controller

The Identcode feature **"one-way controllable"** determines the **D2CA controller** as follows:

- two freely programmable standard signal outputs
- alarm and 2 solenoid valve relays
- Control of two pumps
- PID Controller

The specific Identcodes are as follows:

Measured variable	two-way controllable	Measurable	one-way controllable
Chlorine	D1CA_W_x_C_1_1_2_1_4_M_2_2_0_x	D1CA_W_x_C_1_1_0_1_4_G_0_0_0_x	
Chlorine dioxide (with CDE sensor)	D1CA_W_x_D_1_0_1_1_4_M_2_2_0_x	D1CA_W_x_D_1_0_0_1_4_G_0_0_0_x	
Chlorine dioxide (with CDP sensor)	D1CA_W_x_D_1_2_1_1_4_M_2_2_0_x	D1CA_W_x_D_1_2_0_1_4_G_0_0_0_x	
Chlorite	D1CA_W_x_I_1_0_1_1_4_M_2_2_0_x	D1CA_W_x_I_1_0_0_1_4_G_0_0_0_x	
Fluoride	D1CA_W_x_F_1_2_1_1_4_M_2_2_0_x	D1CA_W_x_F_1_2_0_1_4_G_0_0_0_x	
Dissolved oxygen	D1CA_W_x_X_1_0_1_1_4_M_2_2_0_x	D1CA_W_x_X_1_0_0_1_4_G_0_0_0_x	
Conductivity inductive	D1CA_W_x_L_6_2_4_1_4_M_2_2_0_x	D1CA_W_x_L_6_2_0_1_4_G_0_0_0_x	
Conductivity conductive	D1CA_W_x_L_3_2_1_1_4_M_2_2_0_x	D1CA_W_x_L_3_2_0_1_4_G_0_0_0_x	
Ozone	D1CA_W_x_Z_1_0_1_1_4_M_2_2_0_x	D1CA_W_x_Z_1_0_0_1_4_G_0_0_0_x	
Peracetic acid	D1CA_W_x_A_7_0_1_1_4_M_2_2_0_x	D1CA_W_x_A_7_0_0_1_4_G_0_0_0_x	
ORP	D1CA_W_x_R_5_0_1_1_4_M_2_2_0_x	D1CA_W_x_R_5_0_0_1_4_G_0_0_0_x	
Temperature	D1CA_W_x_T_4_0_1_1_4_M_2_2_0_x	D1CA_W_x_T_4_0_0_1_4_G_0_0_0_x	
Hydrogen peroxide	D1CA_W_x_H_7_0_1_1_4_M_2_2_0_x	D1CA_W_x_H_7_0_0_1_4_G_0_0_0_x	
pH	D1CA_W_x_P_5_2_1_1_4_M_2_2_0_x	D1CA_W_x_P_5_2_0_1_4_G_0_0_0_x	
pH/chlorine			D2CA_W_x_PC_5_2_0_4_M_2_0_x
pH/chlorine dioxide			D2CA_W_x_PD_5_2_0_4_M_2_0_x
pH/ORP			D2CA_W_x_PR_5_2_0_4_M_2_0_x + transducer RHV1
pH/pH			D2CA_W_x_PP_5_2_0_4_M_2_0_x + transducer PHV1

6.1 DULCOTROL® Drinking Water/F&B

Sensors

(for detailed information see chap. Sensor Technology DULCOTEST®)

The Identcode features "measured variable" and "water to be measured" determine the used sensor type as listed below. An accessory such as a heat exchanger for instance may be necessary (see Identcode):

- If a different sensor type is required, the measuring/control panel may also supplied without sensors (see Identcode feature: "Sensor equipment").
- The sensor ICT2 is not mounted on the panel but adapted to the process via a cable of 10 m length. The process adaptation is made through a milk pipe connection.

Measured variable	Sample water	Sensor type	Order no.
Free chlorine	1/5	CLE 3-mA-0.5 ppm	792927
Free chlorine	2/6	CLE 3-mA-2 ppm	792920
Total chlorine	1/5	CTE 1-mA-0.5 ppm	740686
Total chlorine	2/6	CTE 1-mA-2 ppm	740685
pH	1/3/5	PHEP 112 SE	150041
pH	2/4/6	PHER 112 SE	1001586
ORP	1/3/5	RHEP-Pt-SE	150094
ORP	2/4/6	RHER-Pt-SE	1002534
Chlorine dioxide	1/5	CDE 2-mA-0.5 ppm	792930
Chlorine dioxide $(T)_{max}$=60 °C)	3	CDE 3-mA-0.5 ppm	1026154
Chlorine dioxide (temp.corr.)	2/4/6	CDP 1-mA-2 ppm	1002149
Chlorite	1/2/5/6	CLT 1-mA-0.5 ppm	1021596
Conductivity	1/3/5	LFT 1 DE	1001376
Conductivity, inductive	2/4/6	ICT 2	1023352
Ozone	1/2/5/6	OZE 3-mA-2 ppm	792957
Fluoride (temp.corr.)	1/2/5/6	FLEP 010-SE / FLEP 0100-SE+Reference electrode, REFP-SE(Order no.1018458) +Temperature sensor, Pt 100 (Order no.305063)	1028279
Hydrogen peroxide	1/3/5	PER 1-mA-200 ppm	1022509
Hydrogen peroxide	2/4/6	PER 1-mA-2000 ppm	1022510
Peracetic acid	1/3/5	PAA 1-mA-200 ppm	1022506
Peracetic acid	2/4/6	PAA 1-mA-2000 ppm	1022507
Dissolved oxygen	1/2/5/6	DO 1-mA-20 ppm	1020532
Temperature	1/2/3/4/5/6	Temperature sensor, Pt 100	305063

6.1 DULCOTROL® Drinking Water/F&B

Sensor fittings

(for detailed information see chap. Sensor Technology DULCOTEST®)

The bypass sensor fitting used, depends in particular on the sample water, sometimes also on the measured variable or the combination of the measured variables. For clear water, DGMA with flow monitoring and for contaminated water, DLG III also with upstream flow monitoring are used. The DGMA bypass sensor fitting always includes in addition to the required measuring modules a measuring module for refitting the correction variable measurement.

Particularities:

- for fluoride, the DLG IV is used
- for the conductivity with ICT2, a milk pipe connection for direct adaptation to the process is used
- for dissolved oxygen, a T-adapter is used

Measured variable	Sample water	Sensor type
Chlorine dioxide (CDE 2)	1	DGMA
Chlorine dioxide (CDE 3)	3	DGMA
Chlorine dioxide (CDP)	2/4/6	DLGIII
Chlorite	2/6	DLGIII
Chlorite	1/5	DGMA
Fluoride (temp.corr.)	1/2/5/6	DLGIV
Free chlorine	2/6	DLGIII
Dissolved oxygen (DO1)	1/2/5/6	Adapter d75 pipe
Total chlorine	1/5	DGMA
Total chlorine	2/6	DLGIII
Total chlorine	1/5	DGMA
Conductivity inductive (ICT 2)	2/4/6	milk pipe connection
Conductivity	1/3/5	DGMA
Ozone	2/6	DLGIII
Ozone	1/5	DGMA
Peracetic acid	1/3/5	DGMA
Peracetic acid	2/4/6	DLGIII
ORP	2/4/6	DLGIII
ORP	1/3/5	DGMA
Temperature	2/4/6	DLGIII
Temperature	1/3/5	DGMA
Hydrogen peroxide	1/3/5	DGMA
Hydrogen peroxide	2/4/6	DLGIII
pH	2/4/6	DLGIII
pH	1/3/5	DGMA

Hydraulic connection

The hydraulic connection of the sample water is made via a 8x5mm hose connection. Shut-off ball valves are installed upstream and downstream of the bypass sensor fitting. Upstream of the bypass sensor fitting, a sample water filter will be positioned on ordering. The bypass sensor fitting include a sampling tap. A metal pin is integrated in the bypass sensor fitting for an equipotential bonding line.

6.2 DULCOTROL® Cooling Water

6.2.1 DULCOTROL® Cooling Water

The measuring/control stations DULCOTROL® cooling water are used in all industry segments where cooling water is treated. The following applications are covered:

- in the closed cooling circuit, the conditioning of the cooling water through pH value adjustment, metering of corrosion inhibitors, and the disinfection of the cooling water with non-oxidative biocides and oxidative disinfectants.
- in the open cooling circuit (cooling tower), the automatic desalination (blow down) of the cooling water on the basis of a conductivity measurement in addition to the above mentioned functions.

6.2 DULCOTROL® Cooling Water

6.2.2 Identcode Ordering System

DULCOTROL® Cooling Water - One Measured Variable

CWCA	Measured variable	
	L000	Conductivity
	C000	Free chlorine (at pH-value < 8.0)
	G000	Total chlorine (free+combined chlorine)
	B000	Bromine organic (e.g. BCDMH, Stabrex)
	B001	Free bromine (HOBr)
	P000	pH
	R000	ORP
	D000	Chlorine dioxide (with temperature as correction variable)
	Z000	Ozone
	H000	Hydrogen peroxide
	Water to be measured	
	1	Cooling water
		Usage category
		0 All measured variables measurable (L000: desalinate)
		9 All measured variables two-way controllable
		Power supply
		A 230 V, 50/60 Hz
		C 115 V, 50/60 Hz
		Sensor equipment
		0 With sensors
		1 Without sensors
		Version
		0 With ProMinent logo
		Sample water treatments
		0 None
		1 With filter
		Accessories
		0 None
		1 With pressure reducer
		2 With heat exchanger
		3 With sample water pump
		4 With pressure reducer and heat exchanger
		6 With heat exchanger and sample water pump
		Language
		DE German
		EN English
		FR French
		IT Italian
		NL Dutch
		ES Spanish, not for H000
		PL Polish, not for H000
		SV Swedish, not for H000
		HU Hungarian, not for H000
		PT Portuguese, not for H000
		CS Czech, not for H000
		Approvals
		1 CE

6.2 DULCOTROL® Cooling Water

Examples

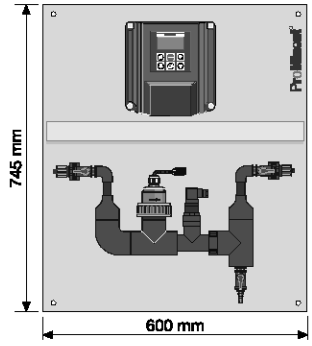

P_DCT_0027_SW

Example 1: CWCA_L000_1_0_A_0 0 0 0 EN_1

Measuring of conductivity and desalinating (blow down) as well as time-controlled metering of biocides and corrosion inhibitors.

Controller:

- D1CA_W_0_K_6_2_2_1_1_G_2_0_0_EN

Sensor fitting:

- T-piece for ICT 1

Sensors:

- ICT 1

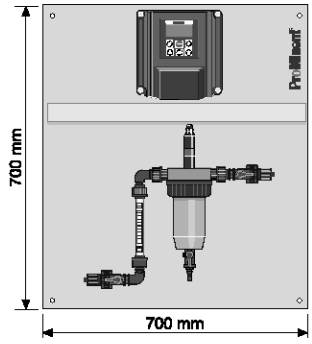

P_DCT_0030_SW_NEU

Example 2: CWCA_B000_1_9_A_0_0_0_6_EN_1

Controlling of organic bromine in turbid and hot (> 45 °C) cooling water. The scope of delivery includes a heat exchanger and a sample water pump which are installed externally to the panel.

Controller:

- D1CA_W_0_B_1_0_1_1_4_M_2_2_0_EN

Sensor fitting:

- DLG III for bromine + flow monitoring

Sensors:

- BRE-1-mA 2 ppm

External to the panel (not shown), accessories:

- Sample water pump
- Heat exchanger

6.2 DULCOTROL® Cooling Water

DULCOTROL® Cooling Water - Two Measured Variables

CWCA	Measured variable										
	LC00	1. Conductivity / 2. free chlorine (at pH-value < 8.0)									
	LG00	1. Conductivity / 2. total chlorine (free+combined chlorine)									
	LB00	1. Conductivity / 2. bromine organic (e.g. BCDMH, Stabrex)									
	LB01	1. Conductivity / 2. free bromine (HOBr)									
	LD00	1. Conductivity / 2. chlorine dioxide (with temperature as correction variable)									
	LZ00	1. Conductivity / 2. ozone									
	LR00	1. Conductivity / 2. ORP									
	LP00	1. Conductivity / 2. pH									
	CP00	1. Free chlorine / 2. pH (at pH-value < 8.0)									
	GP00	1. Total chlorine / 2. pH (free+combined chlorine)									
	BP00	1. Bromine organic / 2. pH									
	BP01	1. Free bromine (HOBr) / 2. pH									
	DP00	1. Chlorine dioxide / 2. pH (with temperature as correction variable)									
	HP00	1. Hydrogen peroxide / 2. pH									
	RP00	1. ORP / 2. pH									
		Water to be measured									
		1	Cooling water								
			Usage category								
			0	All measured variables measurable (Lx0x: desalinate)							
			1	1st measured variable = conductivity: desalinate (blow down), others two-way controllable, 2nd measured variable only measurable							
			2	2nd measured variable two-way controllable, 1st measured variable = conductivity: desalinate (blow down), others only measurable							
			3	Both measured variable one-way controllable with two-channel controller D2C (CP00, GP00, RP00, DP00)							
			9	All measured variables two-way controllable							
				Power supply							
				A	230 V, 50/60 Hz						
				C	115 V, 50/60 Hz						
					Sensor equipment						
					0	with sensors					
					1	without sensors					
						Version					
						0	With ProMinent logo				
						1	Without ProMinent logo				
							Sample water treatments				
							0	None			
							1	With filter			
								Accessories			
								0	None		
								1	With pressure reducer		
								2	With heat exchanger		
								3	With sample water pump		
								4	With pressure reducer and heat exchanger		
								6	With heat exchanger and sample water pump		
									Language		
									DE	German	
									EN	English	
									FR	French	
									IT	Italian	
									NL	Dutch	
									ES	Spanish, not for H in HP00	
									PL	Polish, not for H in HP00	
									SV	Swedish, not for H in HP00	
									HU	Hungarian, not for H in HP00	
									PT	Portuguese, not for H in HP00	
									CS	Czech, not for H in HP00	
										Approvals	
										1	CE

6.2 DULCOTROL® Cooling Water

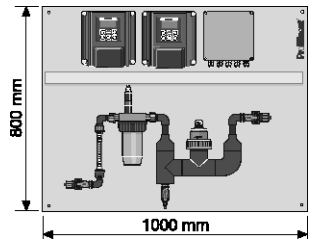

pk_6_201

Examples

Example 1: CWCA_LB00_1_2_A_0_0_0_0_EN_1

Controlling of organic bromine (BCDMH) and measuring of conductivity for desalination as well as time-controlled metering of biocides and corrosion inhibitors.

Controller:

- D1CA_W_0_K_6_2_2_1_1_G_2_0_0_EN
- D1CA_W_0_B_1_0_1_1_4_M_2_2_0_EN
  + terminal box on the panel

Fitting:

- DLG III (flushable) for bromine + flow monitoring
- T-piece for ICT 1

Sensors:

- ICT 1
- BRE 1-mA 2 ppm

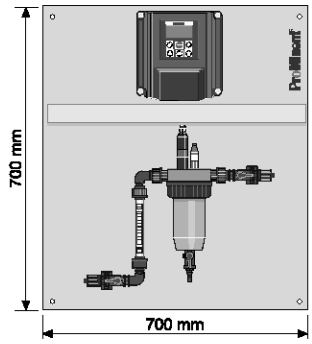

P_DCT_0029_SW

Example 2: CWCA_RP00_1_3_A_0_0_1_3_EN_1

One-way controlling of organic bromine in turbid cooling water. The scope of delivery includes a sample water pump which is installed externally to the panel.

Controller:

- D2CA_W_0_PR_5_2_0_4_M_2_0_EN + transducer RHV1

Sensor fitting:

- DLG III for pH and ORP + flow monitoring

Sensors:

- RHER-Pt SE
- PHER 112 SE

External to the panel (not shown), accessories:

- Filter
- Sample water pump

6.2 DULCOTROL® Cooling Water

DULCOTROL® Cooling Water - Three Measured Variables

CWCA	Measured variable										
	LCP0	1. Conductivity / 2. free chlorine / 3. pH (at pH-value < 8.0)									
	LGP0	1. Conductivity / 2. total chlorine (free+combined chlorine) / 3. pH									
	LBP0	1. Conductivity / 2. bromine organic (e.g. BCDMH, Stabrex) / 3. pH									
	LBP1	1. Conductivity / 2. free bromine (HOBr) / 3. pH									
	LDP0	1. Conductivity / 2. chlorine dioxide (with temperature as correction variable) / 3. pH									
	LZP0	1. Conductivity / 2. ozone / 3. pH									
	LHP0	1. Conductivity / 2. hydrogen peroxide / 3. pH									
		Water to be measured									
		1	Cooling water								
			Usage category								
			0	All measured variables measurable (Lxxx: desalinate)							
			4	1st measured variable = conductivity: desalinate, 2nd +3rd measured variable only measurable							
			5	2nd measured variable two-way controllable, 1st measured variable = conductivity: desalinate, 3rd measured variable only measurable							
			6	1st measured variable = conductivity: desalinate (blow down), 2nd + 3rd measured variable one-way controllable with two-channel controller D2C (only LCP0/LGP0/LDP0)							
			7	1st measured variable = conductivity: desalinate (blow down), 2nd + 3rd measured variable two-way controllable							
			9	All measured variables two-way controllable							
				Power supply							
				A	230 V, 50/60 Hz						
				C	115 V, 50/60 Hz						
					Sensor equipment						
					0	With sensors					
					1	Without sensors					
						Version					
						0	With ProMinent logo				
							Sample water treatments				
							0	None			
							1	With filter			
								Accessories			
								0	None		
								1	With pressure reducer		
								2	With heat exchanger		
								3	With sample water pump		
								4	With pressure reducer and heat exchanger		
								6	With heat exchanger and sample water pump		
									Language		
									DE	German	
									EN	English	
									FR	French	
									IT	Italian	
									NL	Dutch	
									ES	Spanish, not for H in LHP0	
									PL	Polish, not for H in LHP0	
									SV	Swedish, not for H in LHP0	
									HU	Hungarian, not for H in LHP0	
									PT	Portuguese, not for H in LHP0	
									CS	Czech, not for H in LHP0	
										Approvals	
										1	CE

6.2 DULCOTROL® Cooling Water

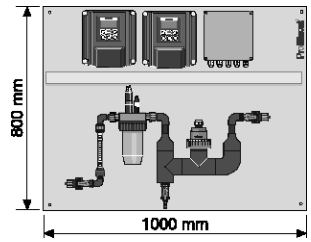

pk_6_211

Examples

Example 1: CWCA_LCP0_1_6_A_0_0_0_1_EN_1

One-way controlling of chlorine and pH and measuring of conductivity for desalination as well as time-controlled metering of biocides and corrosion inhibitors. The scope of delivery includes a pressure reducer which is installed externally to the panel.

Controller:

- D1CA_W_0_K_6_2_2_1_1_G_2_0_0_EN
- D2CA_W_0_PC_5_2_0_4_M_2_0_EN
  + terminal box on the panel

Fitting:

- DLG III (flushable) for pH and chlorine + flow monitoring
- T-piece for ICT 1

Sensors:

- ICT 1
- CLE 3-mA 0.5 ppm
- PHER-112-SE

External to the panel (not shown), accessories:

- pressure reducer

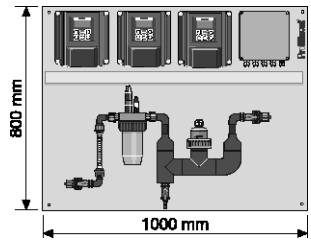

pk_6_212

Example 2: CWCA_LBP0_1_7_A_0_0_0_3_EN_1

Two-way controlling of organic bromine and pH and measuring of conductivity for desalination as well as time-controlled metering of biocides and corrosion inhibitors. The scope of delivery includes a sample water pump which is installed externally to the panel.

Controller:

- D1CA_W_0_K_6_2_2_1_1_G_2_0_0_EN
- D1CA_W_0_B_1_0_1_1_4_M_2_2_0_EN
- D1CA_W_0_P_5_2_1_1_4_M_2_2_0_EN
  + terminal box on the panel

Fitting:

- DLG III for pH and bromine + flow monitoring
- T-piece for ICT 1

Sensors:

- ICT 1
- BRE 1-mA 2 ppm
- PHER-112-SE

External to the panel (not shown), accessories

- Sample water pump

6.2 DULCOTROL® Cooling Water

6.2.3 Technical Description Of The Delivery Scope Of DULCOTROL® Cooling Water

Controller

(for detailed information see chap. Measuring And Control Technology)

The Identcode features "measured variable" and "Usage category" determine the equipment of the measuring/control device. For measuring the conductivity for desalination (blow down) as well as for metering of biocides and corrosion inhibitors, the control unit of the D1Ca in the version Cool-Control with the Identcode **D1CA_W_x_K_6_2_2_1_1_G_2_0_0_x** is used.

The Identcode specification "**measurable**" determines the following version of the **D1CA measuring unit** for the other measured variables:

- Connection of a correction variable
- Two limit value relays
- Control input "Pause"
- Two freely programmable standard signal outputs

The Identcode feature **"two-way controllable"** determines the following version of the **D1CA controller** in addition to the properties listed in **"measurable"**:

- Feedforward control
- Alarm and 2 solenoid valve relays
- Control of two pumps
- PID Controller

The Identcode feature **"one-way controllable"** determines the **D2CA controller** as follows

- Two freely programmable standard signal outputs
- Alarm and 2 solenoid valve relays
- Control of two pumps
- PID Controller

The specific Identcodes are as follows:

Measured variable	two-way controllable	measurable	one-way controllable
Bromine	D1CA_W_x_B_1_0_1_1_4_M_2_2_0_x	D1CA_W_x_B_1_0_0_1_4_G_0_0_0_x	
Chlorine	D1CA_W_x_C_1_1_2_1_4_M_2_2_0_x	D1CA_W_x_C_1_1_0_1_4_G_0_0_0_x	
Chlorine dioxide (with CDP sensor)	D1CA_W_x_D_1_2_1_1_4_M_2_2_0_x	D1CA_W_x_D_1_2_0_1_4_G_0_0_0_x	
Conductivity inductive	D1CA_W_x_L_6_2_4_1_4_M_2_2_0_x	D1CA_W_x_K_6_2_2_1_1_G_2_0_0_x	
Ozone	D1CA_W_x_Z_1_0_1_1_4_M_2_2_0_x	D1CA_W_x_Z_1_0_0_1_4_G_0_0_0_x	
ORP	D1CA_W_x_R_5_0_1_1_4_M_2_2_0_x	D1CA_W_x_R_5_0_0_1_4_G_0_0_0_x	
Hydrogen peroxide	D1CA_W_x_H_7_0_1_1_4_M_2_2_0_x	D1CA_W_x_H_7_0_0_1_4_G_0_0_0_x	
pH	D1CA_W_x_P_5_2_1_1_4_M_2_2_0_x	D1CA_W_x_P_5_2_0_1_4_G_0_0_0_x	
pH/chlorine			D2CA_W_x_PC_5_2_0_4_M_2_0_x
pH/chlorine dioxide			D2CA_W_x_PD_5_2_0_4_M_2_0_x
pH/ORP			D2CA_W_x_PR_5_2_0_4_M_2_0_x + transducer RHV1

6.2 DULCOTROL® Cooling Water

Sensors

(for detailed information see chap. Sensor Technology DULCOTEST®)

The Identcode feature "measured variable" determines the used sensor type as listed below. An accessory such as a filter for instance may be necessary:

- If a different sensor type is required, the measuring/control panel may also supplied without sensors (see Identcode feature: "Sensor equipment").

Measured variable	Sensor type	Order no.
Conductivity, inductive	ICT 1	1023244
Total chlorine	CTE 1-mA-0.5 ppm	740686
Bromine organic	BRE 1-mA-2 ppm	1006894
Free bromine*	BRE 2-mA-10 ppm	1020529
Free chlorine**	CLE 3-mA-0.5 ppm	792927
ORP	RHER-Pt-SE	1002534
pH	PHER 112 SE	1001586
Chlorine dioxide	CDR 1-mA-0.5 ppm	1033762
Ozone	OZE 3-mA-2 ppm	792957
Hydrogen peroxide	PER 1-mA-50 ppm	1030511

* available from 2nd quarter of 2011 — CBR 1-mA-2 ppm (1038015), measuring range based on bromine: 0.04-4 ppm

** available from 2nd quarter of 2011 — CBR 1-mA-10 ppm (1038014)

6.2 DULCOTROL® Cooling Water

Sensor fittings

The Identcode feature "measured variable" determines the used sensor fittings as listed below:

Measured variable	Sample water	Sensor type
Bromine	1	DLGIII
Chlorine dioxide (temp.corr.)	1	DLGIII
Free chlorine	1	DLGIII
Total chlorine	1	DLGIII
Conductivity	1	Adapter DN40 pipe
Ozone	1	DLGIII
ORP	1	DLGIII
pH	1	DLGIII

Hydraulic connection

The hydraulic connection of the sample water is made via a 8x5 mm hose connection. Shut-off ball valves are installed upstream and downstream of the bypass sensor fitting. Upstream of the bypass sensor fitting, a sample water filter will be positioned on ordering. The sensor fitting includes a sampling tap. A metal pin is integrated in the bypass sensor fitting for an equipotential bonding line.

6.3 DULCOTROL® Waste Water

6.3.1 DULCOTROL® Waste Water

The measuring/control stations DULCOTROL® waste water are used in all industry segments where waste water is treated. The following applications may e.g. be covered:

- pH neutralisation and pH value adjustment
- Disinfection of clarified water
- Decontamination of waste water by eliminating reductives and oxidants
- Monitoring of rinsing water
- Desalination of process water
- Control of the dissolved oxygen in the biologic clarification stage

The selection of the components is further optimised by further differentiating the feature "water to be measured" in the Identcode order system:

- "Clear water": this means all waste water which shows almost no or no visible solid fractions.
- "Water with solid fraction, turbid": this means all waste water which shows a low solid fraction which, however, is clearly seen as cloudy turbidity.
- "Water with solid fraction, muddy": this means all waste water which shows a high amount of solids. In a sample, solids either clearly precipitate or the sample is no longer translucent.
- "Water with fluoride and pH< 7": in such water, a higher content of free hydrofluoric acid (HF) is to be reckoned with, which damages certain materials (e.g. also glass).

6.3 DULCOTROL® Waste Water

6.3.2 Identcode Ordering System

DULCOTROL® Waste Water - One Measured Variable

WWCA	Measured variable										
	G000	Total chlorine (free+combined chlorine or chlorine measurement for pH value > 8.0) for "water to be measured" 1, 2									
	P000	pH									
	R000	ORP for "water to be measured" 1, 2, 3									
	L000	Conductivity									
	D000	Chlorine dioxide (with temperature as correction variable) for "water to be measured": 1,2									
	Z000	Ozone for "water to be measured": 1,2									
	H000	Hydrogen peroxide for "water to be measured": 1,2									
	F000	Fluoride for "water to be measured" 1, 2, 4 (pH min. = 5.5, pH max. = 8.5)									
	T000	Temperature for "water to be measured": 1, 2, 3									
		Water to be measured									
		1	Clear water								
		2	Water with solid fraction, turbid								
		3	Water with solid fraction, muddy (sensor directly within pipe, without filter)								
		4	Water with fluoride and pH < 7								
			Usage category								
			0	All measured variables only measurable							
			9	All measured variables two-way controllable							
				Power supply							
				A	230 V, 50/60 Hz						
				C	115 V, 50/60 Hz						
					Sensor equipment						
					0	With sensors					
					1	Without sensors					
						Version					
						0	With ProMinent logo				
							Sample water treatments				
							0	None			
							1	With filter			
								Accessories			
								0	None		
								2	With heat exchanger		
								3	With sample water pump		
								6	With heat exchanger and sample water pump		
									Language		
									DE	German	
									EN	English	
									FR	French	
									IT	Italian	
									NL	Dutch	
									ES	Spanish, not for H000	
									PL	Polish, not for H000	
									SV	Swedish, not for H000	
									HU	Hungarian, not for H000	
									PT	Portuguese, not for H000	
									CS	Czech, not for H000	
										Approvals	
										1	CE

6.3 DULCOTROL® Waste Water

Examples

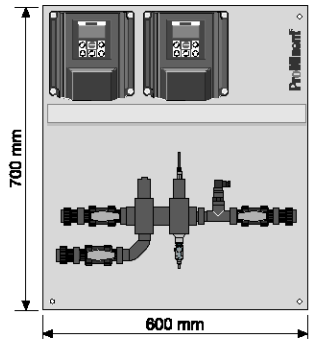

P_DCT_0026_SW1

Example 1: WWCA_P000_3_9_A_0_0_0_0_EN_1

Two-way controlling of pH in muddy waste water.

Controller:

- D1CA_W_0_P_5_2_1_1_4_M_2_2_0_EN

Sensor fitting:

- T-piece for pH electrodes

Sensors:

- PHEX-112-SE

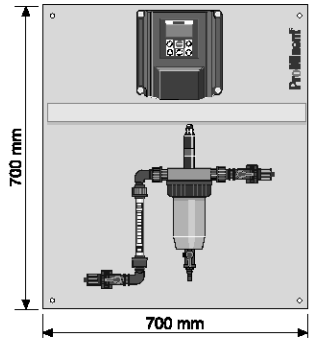

P_DCT_0030_SW_NEU

Example 2: WWCA_H000_2_9_A_0_0_0_0_EN_1

Two-way controlling of hydrogen peroxide in turbid waste water.

Controller:

- D1CA_W_0_H_7_0_1_1_4_M_2_2_0_EN

Fitting:

- DLG III for hydrogen peroxide
  + flow monitoring

Sensors:

- PER1-200 ppm

6.3 DULCOTROL® Waste Water

DULCOTROL® Waste Water - Two Measured Variables

WWCA	Measured variable										
	GP00	1. Total chlorine / 2. pH (free+combined chlorine or chlorine measurement for pH value > 8.0), for "water to be measured" 1, 2									
	GR00	1. Total chlorine / 2. ORP (free+combined chlorine or chlorine measurement for pH value > 8.0), for "water to be measured" 1, 2									
	PP00	1. pH / 2. pH									
	PR00	1. pH / 2. ORP for "water to be measured" 1, 2, 3									
	PL00	1. pH / 2. conductivity									
	RL00	1. ORP/ 2. conductivity for "water to be measured" 1, 2, 3									
	DP00	1. Chlorine dioxide (with temperature as correction variable) / 2. pH for "water to be measured" 1, 2									
	DR00	1. Chlorine dioxide (with temperature as correction variable) / 2. ORP for "water to be measured" 1, 2									
	ZP00	1. Ozone / 2. pH for "water to be measured" 1, 2									
	ZR00	1. Ozone / 2. ORP for "water to be measured" 1, 2									
	HP00	1. Hydrogen peroxide / 2. pH for "water to be measured" 1, 2									
	XP00	1. Dissolved oxygen / 2. pH for "water to be measured" 1, 2, 3									
	PF00	1. pH / 2. fluoride for "water to be measured" 1, 2, 4 (pH min. = 5.5, pH max. = 8.5)									
		Water to be measured									
		1	Clear water								
		2	Water with solid fraction, turbid								
		3	Water with solid fraction, muddy								
		4	Water with fluoride and pH< 7								
			Usage category								
			0	All measured variables only measurable							
			1	1st measured variable two-way controllable, 2nd measured variable only measurable							
			2	2nd measured variable two-way controllable, 1st measured variable only measurable							
			3	Both measured variables one-way controllable with two-channel controller D2C (only for GP00/ PR00 / DP00/ PP00)							
			9	All measured variables two-way controllable							
				Power supply							
				A	230 V, 50/60 Hz						
				C	115 V, 50/60 Hz						
					Sensor equipment						
					0	With sensors					
					1	Without sensors					
						Version					
						0	With ProMinent Logo				
							Sample water treatments				
							0	None			
							1	With filter			
								Accessories			
								0	None		
								2	With heat exchanger		
								3	With sample water pump		
								6	With heat exchanger and sample water pump		
									Language		
									DE	German	
									EN	English	
									FR	French	
									IT	Italian	
									NL	Dutch	
									ES	Spanish, not for H in HP00	
									PL	Polish, not for H in HP00	
									SV	Swedish, not for H in HP00	
									HU	Hungarian, not for H in HP00	
									PT	Portuguese, not for H in HP00	
									CS	Czech, not for H in HP00	
										Approvals	
										1	CE

6.3 DULCOTROL® Waste Water

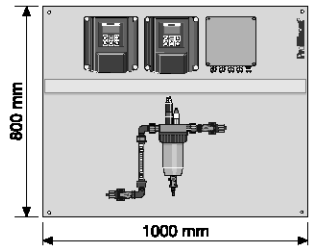

P_DCT_0028_SW

Examples

Example 1: WWCA_DR00_2_1_A_0_0_1_3_EN_1

Two-way controlling of chlorine dioxide and redundant check measuring of ORP in turbid waste water.

Controller:

- D1CA_W_0_D_1_2_1_1_4_M_2_2_0_EN
- D1CA_W_0_R_5_2_0_1_4_G_0_0_0_EN
  + terminal box on the panel

Sensor fitting:

- DLG III for ORP, temperature, and chlorine dioxide
  + flow monitoring

Sensors:

- CDR-1-mA 2ppm
- RHER Pt-SE
- Pt 100

External to the panel (not shown), accessories:

- Filter
- Sample water pump

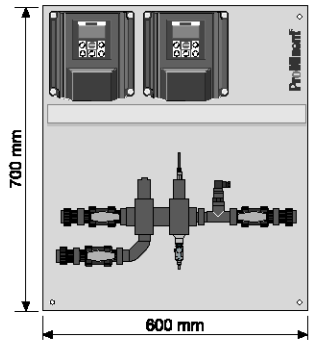

P_DCT_0026_SW1

Example 2: WWCA_PL00_2_1_A_0_0_0_0_EN_1

Two-way controlling of pH and measuring of conductivity in turbid waste water.

Controller:

- D1CA_W_0_P_5_2_1_1_4_M_2_2_0_EN
- D1CA_W_0_L_6_2_0_1_4_G_0_0_0_EN
  + terminal box on the panel

Sensor fitting:

- T-piece for pH-electrode
- T-piece for ICT 1

Sensors:

- ICT 1
- PHEX 112-SE

6.3 DULCOTROL® Waste Water

DULCOTROL® Waste Water - Three Measured Variables

WWCA	Measured variable										
	RPL0	1. ORP / 2. pH / 3. conductivity for "water to be measured" 1, 2, 3									
	GRP0	1. Total chlorine / 2. ORP / 3. pH for "measured water" 1, 2									
	DPR0	1. Chlorine dioxide / 2. pH / 3. ORP for "measured water" 1, 2 (only manual temp. compensation)									
	ZPR0	1. Ozone / 2. pH / 3. ORP for "measured water" 1, 2									
	GPL0	1. Total chlorine / 2. pH / 3. conductivity for "measured water" 1, 2									
	PDL0	1. pH / 2. chlorine dioxide (with temp.) / 3. conductivity for „measured water“ 1, 2									
	PZL0	1. pH / 2. ozone / 3. conductivity for "measured water" 1, 2									
	PLX0	1. pH / 3. conductivity / 2. dissolved oxygen for "measured water" 1, 2, 3									
	PHL0	1. pH / 2. hydrogen peroxide / 3. conductivity for "measured water" 1, 2									
		Water to be measured									
		1	Clear water								
		2	Water with solid fraction, turbid								
		3	Water with solid fraction, muddy								
		4	Water with fluoride and pH< 7								
			Usage category								
			0	All measured variables only measurable							
			4	1st measured variable two-way controllable, 2nd + 3rd measured variable only measurable							
			5	2nd measured variable two-way controllable, 1st + 3rd measured variable only measurable							
			6	1st + 2nd measured variable one-way controllable with two-channel controller D2C (only for GPL0, RPL0, DPR0, PDL0) and 3rd measured variable only measurable							
			7	1st measured variable two-way controllable, 2nd + 3rd measured variable one-way controllable with two-channel controller D2C (only for GRP0, DPR0, ZPR0)							
			9	All measured variables two-way controllable							
				Power supply							
				A	230 V, 50/60 Hz						
				C	115 V, 50/60 Hz						
					Sensor equipment						
					0	With sensors					
					1	Without sensors					
						Version					
						0	With ProMinent logo				
							Sample water treatments				
							0	None			
							1	With filter			
								Accessories			
								0	None		
								2	With heat exchanger		
								3	With sample water pump		
								6	With heat exchanger and sample water pump		
									Language		
									DE	German	
									EN	English	
									FR	French	
									IT	Italian	
									NL	Dutch	
									ES	Spanish, not for H in PHL0	
									PL	Polish, not for H in PHL0	
									SV	Swedish, not for H in PHL0	
									HU	Hungarian, not for H in PHL0	
									PT	Portuguese, not for H in PHL0	
									CS	Czech, not for H in PHL0	
										Approvals	
										1	CE

6.3 DULCOTROL® Waste Water

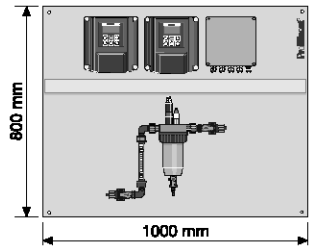

P_DCT_0028_SW

Examples

Example 1: WWCA_DPR0_2_6_A_0_0_1_0_EN_1

One-way controlling of pH and chlorine dioxide and redundant check measuring of ORP in turbid waste water.

Controller:

- D2CA_W_0_DP_5_2_0_4_M_2_0_EN
- D1CA_W_0_R_5_0_0_1_4_G_0_0_0_EN
  + terminal box on the panel

Sensor fitting:

- DLG III for ORP, pH, and chlorine dioxide
  + flow monitoring

Sensors:

- CDP-1-mA 2ppm (manual temp. comp.)
- RHER Pt-SE
- PHER 112-SE

Accessories, outside the panel (not illustrated):

- Filter

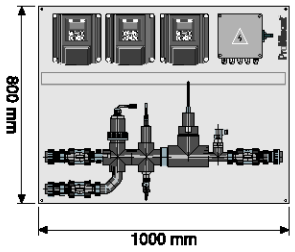

P_DCT_0022_SW

Example 2: WWCA_PLX0_3_9_A_0_0_0_0_EN_1

Two-way controlling of pH, conductivity and dissolved oxygen in muddy waste water.

Controller:

- D1CA_W_0_P_5_2_1_1_4_M_2_2_0_EN
- D1CA_W_0_X_1_0_1_1_4_M_2_2_0_EN
- D1CA_W_0_L_6_2_4_1_4_M_2_2_0_EN
  + terminal box on the panel

Sensor fitting:

- T-piece for pH-electrode
- T-piece for ICT 1
- T-adapter for DO1

Sensors:

- ICT 1
- PHEX 112-SE
- DO1-mA-20 ppm

6.3 DULCOTROL® Waste Water

6.3.3 Technical Description Of The Delivery Scope Of DULCOTROL® Waste Water

Controller

(for detailed information see chap. Measuring And Control Technology)

The Identcode features "measured variable" and "usage category" determine the equipment of the measuring/control device.

The Identcode specification **"measurable"** determines the following version of the **D1CA measuring unit:**

- Connection of a correction variable
- Two limit value relays
- Control input "Pause"
- Two freely programmable standard signal outputs

The Identcode feature **"two-way controllable"** determines the following version of the **D1CA controller** in addition to the properties listed in **"measurable"**:

- Feedforward control
- Alarm and 2 solenoid valve relays
- Control of two pumps
- PID controller

The Identcode feature **"one-way controllable"** determines the **D2CA controller** as follows:

- Two freely programmable standard signal outputs
- Alarm and 2 solenoid valve relays
- Control of two pumps
- PID controller

The specific Identcodes are as follows:

Measured variable	two-way controllable	measurable	one-way controllable
Chlorine	D1CA_W_x_C_1_1_2_1_4_M_2_2_0_x	D1CA_W_x_C_1_1_0_1_4_G_0_0_0_x	
Chlorine dioxide (with CDP sensor)	D1CA_W_x_D_1_2_1_1_4_M_2_2_0_x	D1CA_W_x_D_1_2_0_1_4_G_0_0_0_x	
Fluoride		D1CA_W_0_F_1_2_1_1_4_M_2_2_0_D	
Dissolved oxygen	D1CA_W_x_X_1_0_1_1_4_M_2_2_0_x	D1CA_W_x_X_1_0_0_1_4_G_0_0_0_x	
Conductivity inductive	D1CA_W_x_L_6_2_4_1_4_M_2_2_0_x	D1CA_W_x_L_6_2_0_1_4_G_0_0_0_x	
Ozone	D1CA_W_x_Z_1_0_1_1_4_M_2_2_0_x	D1CA_W_x_Z_1_0_0_1_4_G_0_0_0_x	
ORP	D1CA_W_x_R_5_0_1_1_4_M_2_2_0_x	D1CA_W_x_R_5_0_0_1_4_G_0_0_0_x	
Temperature	D1CA_W_x_T_4_0_1_1_4_M_2_2_0_x	D1CA_W_x_T_4_0_0_1_4_G_0_0_0_x	
Hydrogen peroxide	D1CA_W_x_H_7_0_1_1_4_M_2_2_0_x	D1CA_W_x_H_7_0_0_1_4_G_0_0_0_x	
pH	D1CA_W_x_P_5_2_1_1_4_M_2_2_0_x	D1CA_W_x_P_5_2_0_1_4_G_0_0_0_x	
pH/chlorine			D2CA_W_x_PC_5_2_0_4_M_2_0_x
pH/chlorine dioxide			D2CA_W_x_PD_5_2_0_4_M_2_0_x
pH/ORP			D2CA_W_x_PR_5_2_0_4_M_2_0_x + transducer RHV1
pH/pH			D2CA_W_x_PP_5_2_0_4_M_2_0_x + transducer PHV1

6.3 DULCOTROL® Waste Water

Sensors

(for detailed information see chap. Sensor Technology DULCOTEST®)

The Identcode features "measured variable" and "water to be measured" determine the type of sensor used as specified below.

- If a different sensor type is required, the measuring/control panel may also supplied without sensors (see Identcode feature: "Sensor equipment")

Measured variable	Sample water	Sensor type	Order no.
pH	1	PHEP 112 SE	150041
pH	2	PHER 112 SE	1001586
pH	3	PHEX 112 SE	305096
pH	4	PHEF 012 SE	1010511
ORP	1	RHEP-Pt-SE	150094
ORP	2	RHER-Pt-SE	1002534
ORP	3	RHEX-Pt-SE	305097
Fluoride (temp.corr.)	1/2/4	FLEP 010-SE / FLEP 0100-SE+Reference electrode, REFP-SE(Order no.1018458) + Pt 100 SE (Order no.305063)	1028279
Conductivity, inductive	1/2/3	ICT 1	1023244
Conductivity, inductive	4	ICT 2	1023352
Total chlorine	1/2	CTE 1-mA-10 ppm	740684
Hydrogen peroxide	1/2	PER 1-mA-50 ppm	1030511
Dissolved oxygen	1/2/3	DO 1-mA-20 ppm	1020532
Ozone	1/2	OZE 3-mA-2 ppm	792957
Chlorine dioxide	1/2	CDR 1-mA-2 ppm	1033393
Temperature	1/2/3	Temperature sensor, Pt 100	305063

Sensor fittings

(for detailed information see chap. Sensor Technology DULCOTEST®)

The type of bypass fitting used particularly depends on the "water to be measured" and sometimes on the measured variable or the combination of measured variables. For all clear water or water with a low solid fraction, the sensor fitting DLGIII is used. For muddy water, the sensors are, if possible, directly installed in a pipe using a T-piece. Exception:

- for fluoride, the DLG IV is used.

Measured variable	Sample water	Sensor type
pH	1/2/4	DLGIII
pH	3	T-piece
ORP	1/2	DLGIII
ORP	3	T-piece
Total chlorine	1/2	DLGIII
Hydrogen peroxide	1/2	DLGIII
Ozone	1/2	DLGIII
Chlorine dioxide (CDP)	1/2	DLGIII
Temperature	1/2	DLGIII
Temperature	3	T-piece
Fluoride	1/4	DLGIV+magnetic stirrer
Dissolved oxygen (DO1)	1/2/3	Adapter for PVC pipe d75
Conductivity, inductive (ICT1)	1/2	Adapter for PVC pipe DN 40
Conductivity, inductive (ICT1)	3	ICT 1 in T-piece

Hydraulic connection, piping

The "water to be measured" 1, 2, 4 is connected by means of a 8x5 mm hose connection and the "water to be measured" 3 with a DN 25 connector. The hydraulic connection of the sample water is made via a 8x5mm hose connection. Shut-off ball valves are installed upstream and downstream of the bypass sensor fitting. Upstream of the bypass sensor fitting, a sample water filter will be positioned on ordering. The bypass sensor fitting include a sampling tap. A metal pin is integrated in the bypass sample fitting for an equipotential bonding line. For muddy waste water (water to be measured 3), the sensors are, if possible, directly installed in a pipe.

6.3 DULCOTROL® Waste Water

6.4 DULCOTROL® Free Chlorine – pH-independent

6.4.1 DULCOTROL® Free Chlorine – pH-independent

The measuring/control station DULCOTROL® free chlorine - pH independent is used, independently of the application, wherever free chlorine needs to be measured and in applications where pH values are either unstable or higher than 8.0. The pH value can be lowered and stabilised during measuring by metering a pH buffer solution.

Function and design

The water to be measured flows through the modular bypass fitting DGMA.

- A flow monitor measures the flow and triggers an alarm that can also be transmitted to a superordinated control desk via the D1Ca controller should it fall below 20 l/h.
- A module with an overflow tube limits the flow to a level ideal for the subsequent metering of the buffer solution.
- A peristaltic pump meters a pH buffer solution into a mixer module so that the pH level in the downstream measuring chamber is maintained at < pH 6.5. This enables the pH-independent amperometric measurement of the free chlorine.
- The in-line sensor features an amperometric diaphragm-covered sensor for free chlorine connected to the D1Ca controller.
- Depending on the identcode selection, the D1Ca controller can be configured to measure or control free chlorine and either pH or ORP can optionally be selected as a second measurement. In terms of control, feedforward control can be activated via frequency input if the flow rates of the main flow are variable.

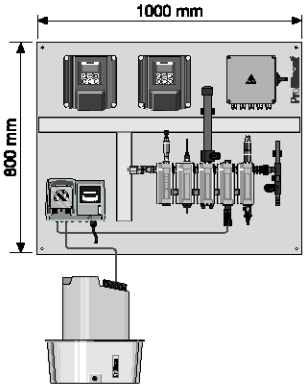

P_DCT_0023_SW

Typical applications

- Drinking water disinfection in water supply utilities with pH > 8.0
- Drinking water disinfection on cruise liners

Customer benefits

- Short response time and precise chlorine measurement thanks to continuous real-time measurements
- Reliable measurement/control without interference

- Metering of the buffer solution prevents disturbance of the chlorine measurement due to pH fluctuations
- The feedforward control prevents disturbance of chlorine control caused by fluctuations in the flow rate of the main process flow
- The amperometric measurement prevents disturbances caused by the influence of colour and turbidity

- Fully automatic operation

- Automatic monitoring of the sample water flow
- Automatic monitoring of the buffer reagent consumption
- Fault alarms

6.4 DULCOTROL® Free Chlorine – pH-independent

6.4.2 Identcode Ordering System

DULCOTROL® free chlorine pH-independent

FCCA	Measured variable										
	C001	1. Measured variable free chlorine									
	CP01	1. Measured variable free chlorine / 2. Measured variable pH									
	CR01	1. Measured variable free chlorine / 2. Measured variable ORP									
		Water to be measured									
		0	Drinking water or similar water								
			Usage category								
			0	All measured variables only measurable							
			1	1st measured variable two way controllable, 2nd measured variable only measurable (not C001)							
			3	Both measured variables one way controllable with two-channel controller D2C (only CP01)							
			9	All measured variables two-way controllable (not CR01)							
				Power supply							
				A	230 V, 50/60 Hz						
				B	115 V, 50/60 Hz						
					Sensor equipment						
					0	with sensors					
					1	without sensors					
						Version					
						0	Panel-mounted with ProMinent logo				
						1	Panel-mounted without ProMinent logo				
							Sample water treatments				
							0	without filter			
							1	with filter			
								Accessories			
								A	with 10 litre tank and level monitoring		
								B	with 35 litre tank and level monitoring		
								C	with 35 litre tank and level monitoring + agitator		
									Language		
									DE	German	
									EN	English	
									FR	French	
									IT	Italian	
									NL	Dutch	
									ES	Spanish	
									PL	Polish	
									SV	Swedish	
									HU	Hungarian	
									PT	Portuguese	
									CS	Czech	
										Certification	
										1	CE

6.4 DULCOTROL® Free Chlorine – pH-independent

6.4.3 Technical Description Of The Delivery Scope DULCOTROL® Free Chlorine, pH-independent

Controller

The identcode specification "measurable" defines the following version of D1CA measuring unit:

- Connection of a correction variable (with pH measured variable)
- Two limit value relays
- "Pause" control input
- Two freely programmable standard signal outputs

The identcode specification "two-way controllable" defines the following version of D1CA controller in addition to the properties listed under "measurable":

- Feedforward control via mA input
- Alarm and two solenoid valve relays
- Activation of two pumps
- PID control

The identcode specification "one-way controllable" defines the D2CA controller as follows:

- Two freely programmable standard signal outputs
- Alarm and two solenoid valve relays
- Control of two pumps
- PID control

The precise identcodes are as follows:

Measured variable	two-way controllable	measurable	one-way controllable
Chlorine	D1CA_W_x_C_1_0_1_1_4_M_2_2_0_x	D1CA_W_x_C_1_0_1_1_4_G_0_0_0_x	
Chlorine/ pH			D2CA_W_0,1_PC_5_2_0_4_M_2_0_x
ORP		D1CA_W_x_R_5_0_1_1_4_G_0_0_0_x	
pH	D1CA_W_x_P_5_2_1_1_4_M_2_2_0_x	D1CA_W_x_P_5_2_1_1_4_G_0_0_0_x	

Sensors

- Measured variable **Free chlorine**: CLE 3-mA-5 ppm (part no. 1033392)
- Measured variable **pH**: PHEP112-SE (part no. 150041)
- Measured variable **ORP**: RHEP PT-SE (part no. 150094)

Fittings

Bypass fitting

- DGMA with flow limitation and mixer chamber for metering of buffer solution, assembly FCCA compl. (part no. 1036144)

Peristaltic pump

DF4A FW004004P0U10000122001

Reagent tank and level monitoring

	Order no.
10 litre canister, labelled	1036354
Suction fitting with filling level monitor	1002513
35 litre metering container, labelled	1036355
Suction fitting with filling level monitor	790365
Manual mixer	741118

Buffer reagent

	Order no.
4.2 kg of citric acid in a 5 litre bucket for the production of 10 litres of ready-to-use solution	1036014

6.4 DULCOTROL® Free Chlorine – pH-independent

7 Sensor Technology DULCOTEST®

Contents Page

7.0 Overview of Sensor Technology DULCOTEST® 1
7.0.1 Product Overview 1
7.0.2 Selection Guide 2

7.1 Sensor Technology DULCOTEST® Measuring principles 5
7.1.1 Three Measurement Priciples For Reliable Water Treatment 5
7.1.2 Potentiometry - Measures An Electrode's Potential In A Sample Solution 5
7.1.3 Amperometry - A Current Measurement Used To Determine The Concentration Of Predetermined Dissolved Solids In Aqueous Solutions 6
7.1.4 Advantages Of Amperometric Sensors DULCOTEST® At A Glance 7
7.1.5 Conductometry – The Measurement Of Electrolytic Conductivity 8

7.2 Sensors DULCOTEST® pH, ORP, fluoride and temperature 9
7.2.1 pH Sensors With SN6 Or Vario Pin 11
7.2.2 pH Sensors With Fixed Cable 17
7.2.3 ORP Sensors With SN6 Connector 19
7.2.4 ORP Sensors With Fixed Cable 23
7.2.5 Fluoride Sensors 24
7.2.6 Temperature Sensors 25

7.3 DULCOTEST® Amperometric Sensors 26
7.3.1 Amperometric Sensors For Chlorine, Bromine, Chlorine Dioxide, Chlorite, Ozone, Dissolved Oxygen, Peracetic Acid And Hydrogen Peroxide 26
7.3.2 Chlorine Sensors 27
7.3.3 Bromine Sensors 37
7.3.4 Chlorine Dioxide Sensors 39
7.3.5 Chlorite Sensors 42
7.3.6 Ozone Sensors 42
7.3.7 Sensors For Dissolved Oxygen 43
7.3.8 Sensor For Peracetic Acid 45
7.3.9 Sensor for hydrogen peroxide 46

7.4 DULCOTEST® Conductivity Sensors 48
7.4.1 Conductivity Sensors 48
7.4.2 2-Electrode Conductivity Sensors 50
7.4.3 Inductive Conductivity Sensors 58

7.5 DULCOTEST® Measuring Points for Turbidity 60
7.5.1 Measuring Points for Turbidity 60

7.6 Sensor Technology Accessories 62
7.6.1 Sensor Accessories 62
7.6.2 Consumable Items For Sensors 65
7.6.3 Probe Fittings 68
7.6.4 Immersion Probe Fittings 71
7.6.5 Immersion Probe Fittings/Adaptors 75

7.7 Application Examples 78

7.0 Overview of Sensor Technology DULCOTEST®

7.0.1 Product Overview

DULCOTEST® Sensors

DULCOTEST® sensors supply exact, reliable and application-specific measured values in real time for the purpose of effectively monitoring or controlling processes. The sensors can be optimally integrated in the ProMinent® control circuit together with controllers and metering pumps. Many different types of fitting are available for optimum integration in specific processes. The measurement methods

- Potentiometry (pH, ORP, fluoride)
- Amperometry (disinfectant)
- Conductivity (salinity, alkalinity, acidity)

cover the most important measurement parameters found in water treatment applications. The sensors are stable in the long term, require minimum maintenance and are easy to install, calibrate and service.



pk_6_095_2

Potentiometric DULCOTEST® Sensors

The DULCOTEST® pH and ORP sensors represent a comprehensive range of sensors for solving all measurement tasks. The range of applications extends from simple use in water treatment systems through to industrial process applications with demanding requirements in terms of temperature, pressure as well as resistance to soiling and chemicals.

- Long service life ensured by premium glass quality and an optimum combination of automated and manual production
- Precise and reliable measurement for efficient processes and maximum process reliability
- Tailored process integration guaranteed by special versions with individual installation lengths, cable lengths and connectors
- Short delivery and storage times ensure optimum electrode life



pk_6_096_2

Amperometric DULCOTEST® Sensors

The amperometric sensors of the DULCOTEST® product line supply measured values for the most diverse range of disinfectants such as e.g. chlorine, bromine, chlorine dioxide, ozone. The selective and exact measured values ensure maximum process reliability and are made available round the clock in real time either for monitoring or controlling applications. ProMinent sets standards with its sensor systems: Innovative sensors such as for chlorite, total chlorine, peracetic acid, hydrogen peroxide and dissolved oxygen enhance the product range. The sensors are available for different measuring ranges, in different connection variants for DULCOMETER® measuring and control devices and as special versions for specific applications.



pk_6_097

DULCOTEST® Sensors for Electrolytic Conductivity

The comprehensive product line of DULCOTEST® conductivity sensors ensures the right sensor is selected with optimum price/performance ratio in applications ranging from simple water treatment through to intricate industrial process waste water processing. 27 different types of sensor tailored to the most diverse range of requirements: Measuring range, temperature, chemical resistance, soiling compatibility and process integration

- From simple conductometric 2-electrodes through to inductive high-end sensors
- Precise and reliable measurement for efficient process control and maximum process reliability
- Long service life and long maintenance intervals reduce downtimes and increase the availability of the measured values
- Completely preassembled fitting and sensor sets for simple, fast and flawless installation

7.0 Overview of Sensor Technology DULCOTEST®

7.0.2 Selection Guide

Selection Guide DULCOTEST® pH Sensors

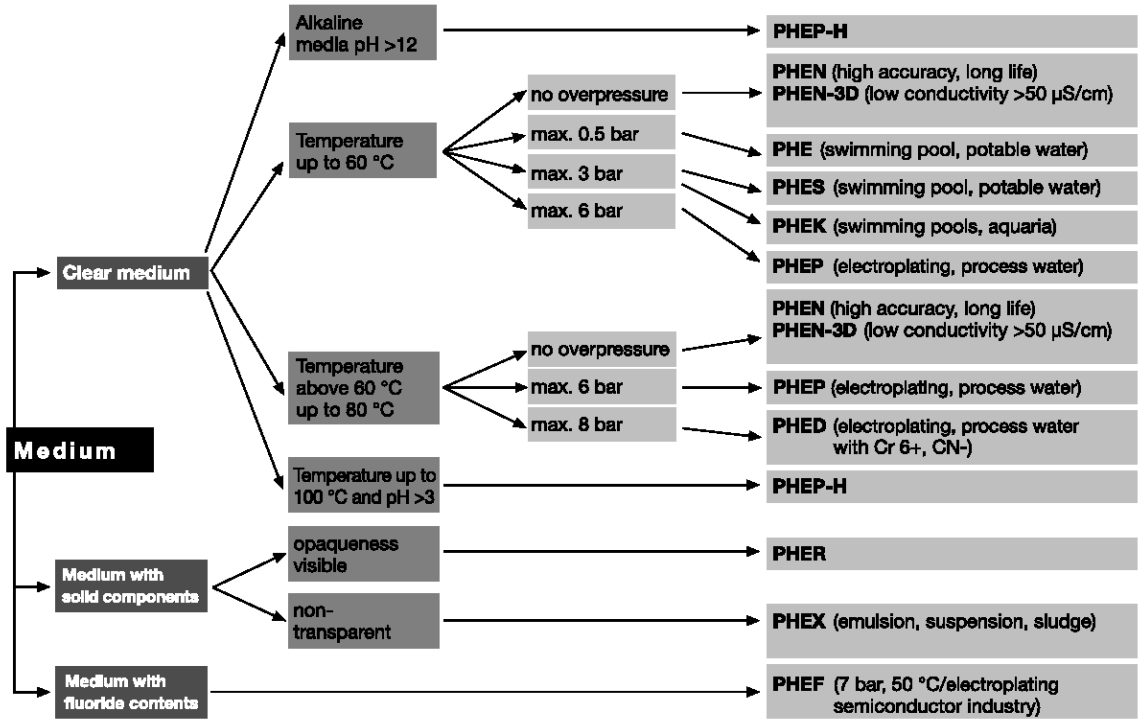

Selection guide - Amperometric sensors

Measured variable	Applications	Graduated measuring range	Connection to DULCOMETER®	Sensor type
Free chlorine	Drinking water, swimming pool	0.01–100 mg/l	D1C, D2C, ProMcon	CLE 3-mA-xppm, CLE 3.1-mA-xppm
Free chlorine	Drinking water, swimming pool water, in situ electrolysis (without diaphragm)	0.02-10 mg/l	D1C, D2C, ProMcon	CLO 1-mA-xppm
Free chlorine	Hot water up to 70 °C (legionella), in situ electrolysis (without diaphragm)	0.02-2 mg/l	D1C, D2C, ProMcon	CLO 2-mA-2ppm
Free chlorine	Drinking water, swimming pool	0.01–50 mg/l	DMT	CLE 3-DMT-xppm
Free chlorine	Drinking water, swimming pool	0.01–10 mg/l	DULCOMARIN® II	CLE 3-CAN-xppm, CLE 3.1-CAN-xppm
Free chlorine	Drinking water, swimming pool	0.05-5 mg/l	COMPACT	CLB 2-µA-xppm
Free chlorine	Cooling water, process water, waste water, water with higher pG values (stable)	0.01-10 mg/l	D1C, D2C, ProMcon	CBR 1-mA-xppm
Total available chlorine	Swimming pool water with chlorine-organic disinfectants	0.02–10 mg/l	D1C, D2C, ProMcon	CGE 2-mA-xppm
Total available chlorine	Swimming pool water with chlorine-organic disinfectants	0.01–10 mg/l	DULCOMARIN® II	CGE 2- CAN-xppm
Total chlorine	Drinking, service, process and cooling water	0.01–10 mg/l	D1C, D2C, ProMcon	CTE 1-mA-xppm
Total chlorine	Drinking, service, process and cooling water	0.01–10 mg/l	DMT	CTE 1-DMT-xppm
Total chlorine	Drinking, service, process and cooling water	0.01–10 mg/l	DULCOMARIN® II	CTE 1-CAN-xppm
Combined chlorine	Swimming pool water	0.02–2 mg/l	D2C	CTE 1-mA-2 ppm + CLE 3.1-mA-2 ppm
Combined chlorine	Swimming pool water	0.01–10 mg/l	DULCOMARIN® II	CTE 1-CAN-xppm + CLE 3.1-CAN-xppm

7.0 Overview of Sensor Technology DULCOTEST®

Measured variable	Applications	Graduated measuring range	Connection to DULCOMETER®	Sensor type
Total available bromine	Cooling water, swimming pool water, whirlpool water, bromine with bromorganic disinfectants (e.g. BCDMH)	0.2–10 mg/l	D1C, ProMcon	BRE 1-mA-xppm
Total available bromine	Cooling water, swimming pool water, whirlpool water, bromine with inorganic bromine compounds (e.g. NaBr/HOCl)	0.2–10 mg/l	D1C, ProMcon	BRE 2-mA-xppm
Total available bromine	Cooling water, swimming pool water, whirlpool water with bromorganic or inorganic bromine compounds	0.02-10 mg/l	DULCOMARIN® II	BRE 3-CAN-10 ppm
Free and bound bromine	Cooling water, process water, waste water, water with higher pH values (stable)	0.02-20 mg/l	D1C, ProMcon	CBR 1-mA-xppm
Chlorine dioxide	Drinking water	0.01–10 mg/l	D1C, D2C, DULCOMARIN® II	CDE 2-mA-xppm
Chlorine dioxide	Bottle washer system	0.02–2 mg/l	D1C, D2C, DULCOMARIN® II	CDP 1-mA
Chlorine dioxide	Hot water up to 60 °C, cooling water, waste water, irrigation water	0.01-10 mg/l	D1C, D2C, DULCOMARIN® II	CDR 1-mA-xppm
Chlorite	Drinking, wash water	0.02–2 mg/l	D1C, DULCOMARIN® II	CLT 1-mA-xppm
Ozone	Drinking, service, process, swimming pool water	0.02–2 mg/l	D1C, ProMcon	OZE 3-mA-xppm
Dissolved oxygen	Drinking, surface water	2–20 mg/l	D1C	DO 1-mA-xppm
Dissolved oxygen	Activated sludge tank, sewage treatment plant	0.1–10 mg/l	D1C	DO 2-mA-xppm
Peracetic acid	CIP, antiseptic food filling process	1–2,000 mg/l	D1C	PAA 1-mA-xppm
Hydrogen peroxide	Clear water, fast control	1–2,000 mg/l	PEROX controller	Perox sensor PEROX-H2.10-P
Hydrogen peroxide	Process, swimming pool water	0.5–2,000 mg/l	D1CA, ProMcon	PER1-mA-xppm

7.0 Overview of Sensor Technology DULCOTEST®

Selection guide - DULCOTEST® ORP Sensors

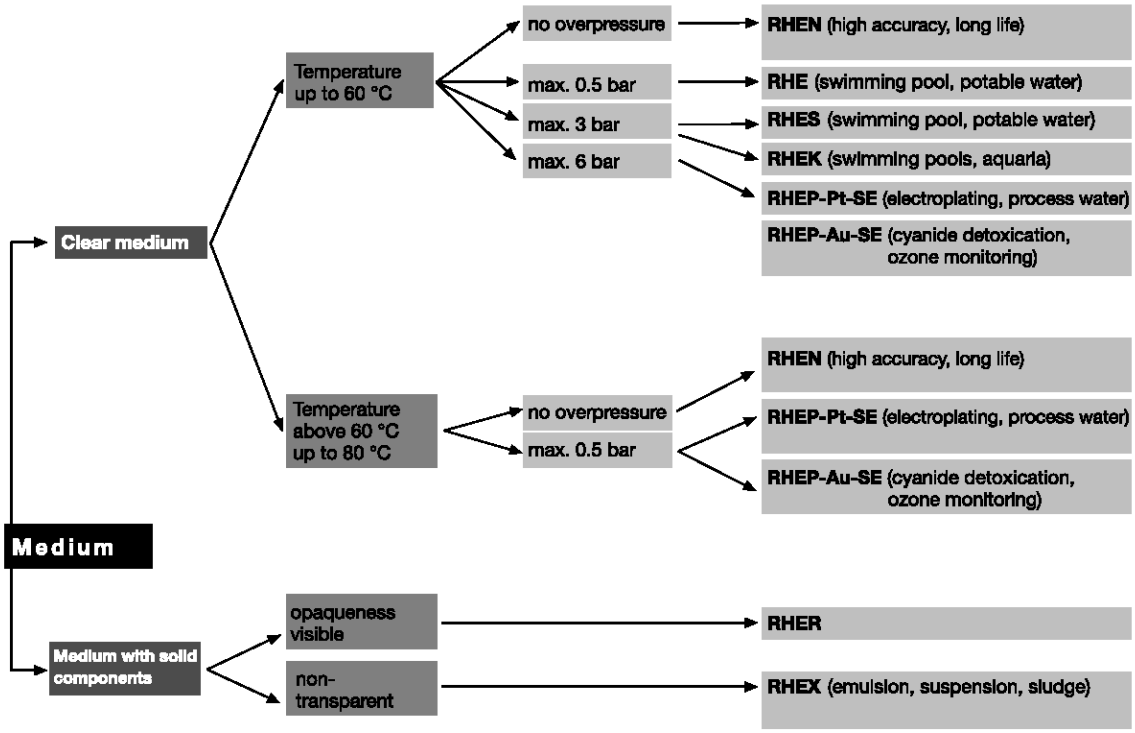

Selection guide - DULCOTEST® Conductivity sensors

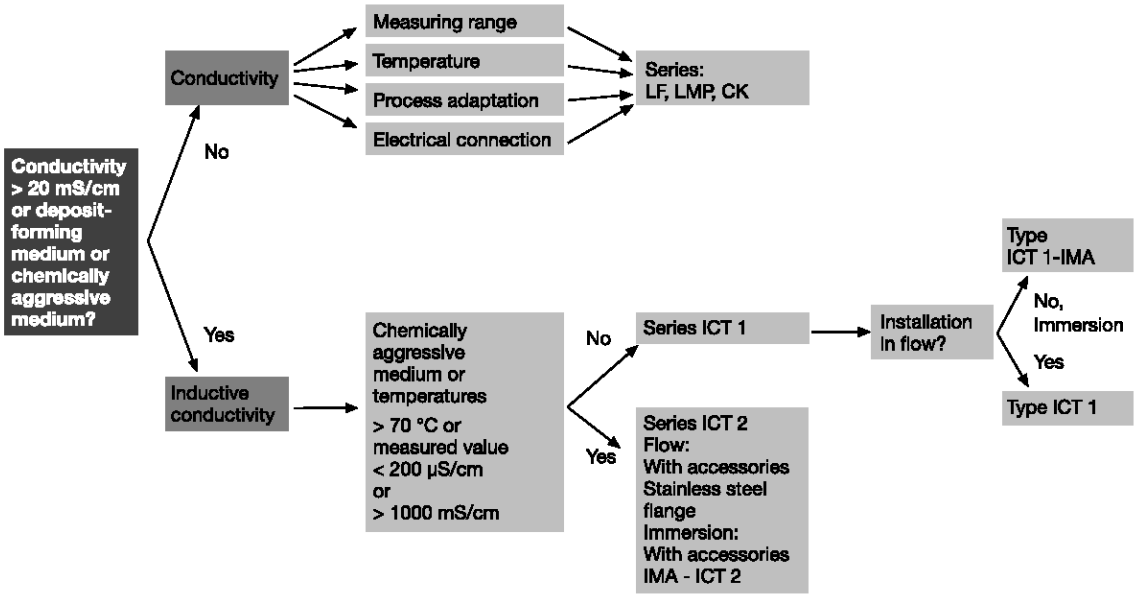

7.1 Sensor Technology DULCOTEST® Measuring principles

7.1.1 Three Measurement Priciples For Reliable Water Treatment

- Potentiometry is used to determine: pH value, ORP and fluoride concentration
- Amperometry is used to determine: chlorine, bromine, chlorine dioxide, ozone, hydrogen peroxide, peracetic acid
- Conductometry is used to determine electrolytic conductivity

7.1.2 Potentiometry - Measures An Electrode's Potential In A Sample Solution

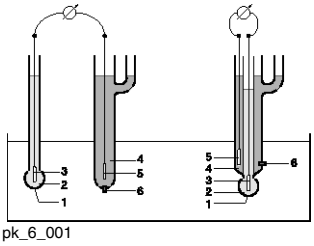

pk_6_001

1 Glass membrane
2 Internal pH buffer
3 Internal derivation
4 Electrolyte
5 External derivation
6 Diaphragms

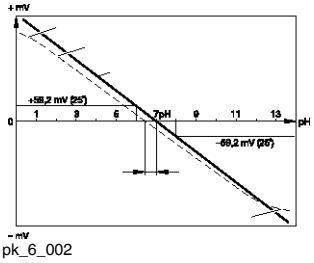

pk_6_002

1 Acid error
2 Exponential (in practice)
3 Theoratical (nominal slope)
4 Zero point deviation (asymmetrical potential)
5 Alkali error
6 Voltage of probe

As the measurement of the potential of a single electrode is impossible (half-cell), an electrode consisting of two half-cells is used. Their potential difference can be measured in the form of a high impedance voltage - i.e. practically current-free.

A sensor always comprises:

A measuring electrode which reacts as specifically as possible to changes in concentration of a predetermined reaction participant and a reference electrode which delivers as constant a voltage as possible (voltage does not depend on the reaction participant)

One example of this kind of measurement system is the pH sensor designed as a separate sensor (fig. 1).

pH is the negative logarithm of the hydrogen-ion activity

Hydrogen-ion concentrations can range over large areas from less than 10^{-14} g/l to more than 10 g/l (or Mol/l) in aqueous solutions and the exponential written form is unwieldy. The pH scale is therefore defined as:

$pH = - \log a_{H^+}$

When the concentration is not too high, activity and concentration can be equated.

Thus a concentration of 10^{-14} equates to a pH value of 14 and a concentration of $10^0 = 1$ a pH value of 0.

The pH value of 7 is described as the neutral point. That means that the active concentrations of H^+ and OH^- ions which are derived from the disassociation of water (H_2O -> H^++ OH^-) are equal.

If the hydrogen ions predominate due to the addition of acid (e.g. HCl), the pH value falls below 7. When alkali is added (e.g. NaOH), values rise above 7 and the solution becomes alkaline

Any change to the pH value by 1 corresponds to a change in concentration by a factor of 10, as determined by the logarithmic relationship.

Fig. pk_6_002 shows the theoretical voltage progression of pH glass sensors. In practice, however, glass sensors deviate more or less from the theoretical progression.

The electrode system generally demonstrates a zero point deviation (asymmetrical potential) of less than ±pH 0.5. The sensor slope (mV/pH) can also deviate from the theoretical value U_N (59.2 mV/pH at 25 °C), particularly with ageing glass sensors.

In the case of very small pH values further deviation can occur in the form of the so-called acid error, while at high pH values the so-called alkaline error (or Na error) should be taken into account.

pH measurement amplifiers must be adjusted to the sensors used by means of zero point and slope calibrations

For this purpose the zero point calibration is carried out using a buffer solution whose value is pH 7 and the slope test with a buffer in the alkaline or acid regions, pH 2 or 3 values removed from the neutral point.

When pH measurements deviate from pH 7, fluctuating temperatures of the liquid sample may require temperature compensation.

In this case there are three questions to answer:

1 By which pH value should measurements be carried out?

2 How great are the temperature fluctuations?

3 What degree of accuracy is required of the measurement?

Temperature influence without compensation:

At pH 10, a temperature increase of 10 °C triggers a reading error of approx. + pH 0.1. This effect is increased the further the reading deviates from pH 7.

7.1 Sensor Technology DULCOTEST® Measuring principles

The measurement of ORP voltage is also a potentiometric measuremt

The term “ORP” (Oxidation/Reduction Potential) stands for the simultaneously occurring reduction and oxidation in aqueous solutions. In general, in the case of oxidation, electrons are extracted, whereby an oxidant functions as an electron acceptor. In the case of reduction, however, electrons are resorbed, whereby a reducing agent is effective as an electron donator.

ORP potential is measured using noble metal electrodes, generally platinum. A positive ORP potential is produced in a liquid containing an oxidant (e.g. chlorine) and a negative ORP potential is produced in a reducing agent (e.g. sodium bisulphite).

The level of the ORP voltage provides an indication of the oxidation or reducing strength of a solution. In the case of disinfection, the ORP voltage provides an indication of the germicidal effect of, for example, chlorine or ozone.

ORP voltage may therefore be taken into consideration as a hygiene parameter in water treatment.

It is important to note the dependence of ORP voltage on the pH value and qualitative assumptions must be based on a constant pH value.

Examples of typical applications for ORP measurement

1 Cyanide removal at high pH values through oxidation using gold electrodes.

2 Chromate removal at low pH values through reduction using platinum electrodes.

3 Monitoring of the disinfecting effect of oxidant metering (chlorine/bromine) using platinum electrodes.

7.1.3 Amperometry - A Current Measurement Used To Determine The Concentration Of Predetermined Dissolved Solids In Aqueous Solutions

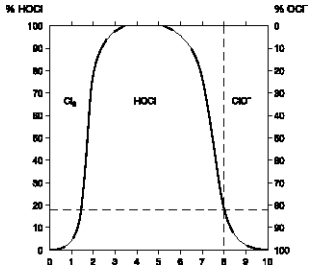

pk_6_003

Disassociation curve of the hypochlorous acid (HOCl)

The type of current measurement is concentrated in the nA range (10^{-9} A) or µA (10^{-6} A). Either open or membrane-capped 2- or 3-electrode cells are used for operational measurements. The amperometric sensor product range allows users to determine con-centrations of chlorine, bromine, chlorine dioxide, chlorite, ozone, hydrogen peroxide, peracetic acid and dissolved oxygen.

Our amperometric DULCOTEST® sensors are highly developed membrane-covered 2-electrode cells.

Separating the electrode chamber from the sample liquid by means of a special membrane allows clear metrological predictions to be made and interference factors to be eliminated.

The ProMinent DULCOTEST® 2-electrode sensors use gold or platinum working electrodes (cathodes). The counter electrodes (anodes) are made of specially coated silver

In contrast to open, interference-prone sensors, membrane-capped sensors are almost totally unaffected by flow rates above a minimum level (approx. 30 l/h). There is therefore no need to maintain constant flow rates.

The pH value has a decisive influence on chlorine measurement

It is important to know the forms in which chlorine occurs in aqueous solutions. Chlorine only occurs as dissolved chlorine gas Cl_2 in water with a very low pH value and above approx. pH 3 it occurs as hypochlorous acid HOCl, which dissociates into hypochlorite if the pH value increases further (see fig. pk_6_003).

Hypochlorite has 100 times less disinfecting power than hypochlorous acid. Detection using a chlorine sensor is therefore impractical. However, both hypochlorous acid and hypochlorite are categorised as "free chlorine” and as such can be detected using the DPD 1 measuring method, which is generally used as a comparison measurement.

Example:

At pH 8 (see fig. pk_6_003) only 20 % of HOCl is present in an effective form, while 80 % occurs in the form of the virtually ineffective OCl^-. If, however, one wants the measuring device to display a value corresponding to the DPD comparison measurement, adjustment can be carried out by means of a sensitivity threshold calibration (slope test).

For the measurement to be valid, the pH value must be kept constant. If not, a new slope test should be carried out. The maximum admissible pH value for sensors is pH 8 for inorganic chlorine and pH 9.5 for organic chlorine.

7.1 Sensor Technology DULCOTEST® Measuring principles

Temperature exerts a considerable influence on a chlorine measurement. For this reason, the DULCOTEST® chlorine sensors incorporate an automatic temperature compensation system

There are no problems in using inorganic chlorine in chlorine measurement (chlorine gas Cl_2, sodium hypochlorite NaOCl or calcium hypochlorite $Ca(OCl)_2$), as long as the pH value is constant. Difficulties can arise when using organic chlorine additives (isocyanuric acid). - These are easily overcome, however, by using the organic chlorine sensor (type CGE).

When organic chlorine stabilisers are added, both hypochlorus acid and chlorine combined with isocyanuric acid are formed. Both species are detected by the organic chlorine sensors (CGE).

Measurements according to the DPD 1 method also detect organic chlorine in precisely the same way as the almost ineffective hypochlorite (which occurs at high pH values). DPD measurement can thereby be deceptive, indicating hygienic safety when this is not actually the case.

Typical applications for DULCOTEST® chlorine sensors are in swimming pool water (including seawater), drinking water and industrial water

Chlorine measurement can be affected by bromine, iodine, ozone and chlorine dioxide but not dissolved oxygen. The action of the diaphragm of the Type CLE free chlorine sensor is blocked by surfactants. The sensor cannot then be used. However, the Type CTE total chlorine sensor can be used in such an application.

A sensor can be used for the measurement of chlorine dioxide according to the same principle as for inorganic chlorine measurement. Chlorine dioxide measurement does not depend on the pH value. Its temperature-dependency is compensated. Dissolved oxygen and chlorite do not affect the measurement results. Surfactants are problematic for the CDE sensor type. The CDP type can, however, be used in liquids containing surfactants.

Amperometric sensors can also be used to measure bromine and ozone in aqueous solutions.

7.1.4 Advantages Of Amperometric Sensors DULCOTEST® At A Glance

Simple to use

- No zero point calibration necessary
- Sample liquid need not be de-chlorinated with active carbon filter
- Installation and calibration is very quick

Reliable measurement in real-time

- No cross-sensitivity because of turbidity and colouration
- The DULCOTEST® chlorine measurement can also be used in seawater and brine bath
- The measured value is largely unaffected by flow rate
- online measurement

Minimum maintenance

- Maintenance is limited to the 6-12 month replacement of the membrane cap and the electrolyte
- Therefore long term operating costs are low

7.1 Sensor Technology DULCOTEST® Measuring principles

7.1.5 Conductometry – The Measurement Of Electrolytic Conductivity

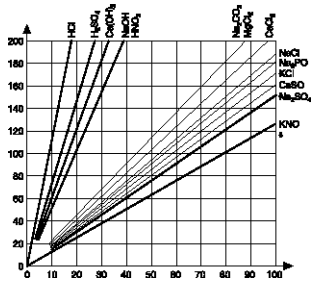

pk_6_004

Dependence of electrolytic conductivity on the concentration of dissolved acids, alkalis and salt solutions

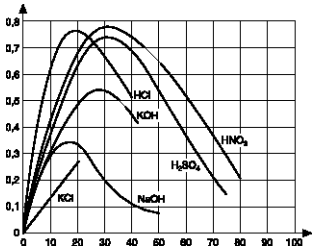

pk_6_005

Dependence of specific conductivity on the concentration in percentage weight of concentrated acids, alkalis and salt solutions

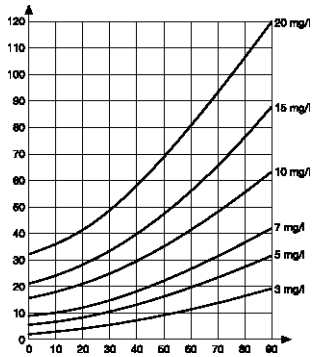

pk_6_006

Conductivity of aqueous solutions of NaCl depending on the temperature of different concentrations

In contrast to metallic conductivity in which electrical charge is transferred through electrons, electrolytic conductivity is caused by ions, i.e. positively or negatively charged atoms or atom groups which occur after dissolving and dissociation in generally aqueous solutions. Conductivity measuring sensors are differentiated according to the following criteria:

- **The cell constant as a differentiating feature**
  An arrangement where the conductivity of an electrolyte is measured in a tube of length l = 1 cm and a cross section q = 1 cm^2, has a cell constant of k = 1 cm^{-1}. If the length were l = 10 cm (or if the area were q = 0.1 cm^2, the cell constant would be k = 10 cm^{-1}. If one increases the cross section, however, to q = 10 cm^2 (decreases l to 0.1 cm), the result would be a cell constant of k = 0.1 cm^{-1}. It is easy to see that to measure low conductivity levels one should use a conductivity sensor with low cell constants and a sensor with high cell constants for high conductivity levels. The sensitivity of the measurement at low conductivity levels (e.g. k = 0.1 cm^{-1}) is thereby increased - or lowered at high conductivity levels (e.g. k = 10 cm^{-1}).
- **The material of the sensors**
  As well as selecting the correct cell constant, it is also important to select the suitable electrode material. Stainless steel has been found to be especially suitable in the lower range up to around 500 µS/cm. In the upper range, however, where stainless steel is less suitable because of the occurrence of polarisation effects, special graphite is above all used. To avoid errors because of polarisation effects when carrying out electrolytic conductivity measurements, alternating current must be used. Frequencies of around 50 Hz are preferred for low conductivity levels while up to approx. 5 kHz are required at higher levels. Long measuring lines can lead to errors both at very low and very high conductivity levels - in the lower range caused by conductivity capacities, in the upper range caused by conductivity resistances. The distance between the sensor and the measurement amplifier should therefore be kept as short as possible.

Each conductivity measurement depends on the temperature

Different dissolved substances in general have different temperature coefficients a (alpha), which leads to a specific temperature progression and which can alter depending on concentration and temperature. (Fig. pk_6_006)

Because conductivity measurements are generally carried out to obtain predictions about substance concentrations, temperature compensation is used to obtain accurate measuring results. It is also used to compensate the measured variable according to an international standard reference temperature of 25 °C. NTC or PT 100 temperature sensors are used as measuring sensors for temperature compensation, whereby the PT 100 is clearly superior because of linearity and thus accuracy.

Inductive conductivity measurement

While errors occur with open conductivity measurements because of polarisation effects and deposits on the electrode surfaces, these errors can be avoided with electrodeless inductive conductivity measurements. These sensors do not require regular cleaning and the measuring accuracy is significantly more reliable.

7.2 Sensors DULCOTEST® pH, ORP, fluoride and temperature

For an optimum functioning of pH and ORP combination sensors, please note the following general guidelines:

- The sensors may never dry out
- The installation angle must be > 15° from the horizontal level (exception type PHEK-L)
- max. flow < 0.8 m/s
- Use suitable measuring lines (see Chapter 6.5.1)
- Measuring lines should be as short as possible
- Use suitable measuring devices/transducers (high-impedances input)
- Calibrate with quality buffer solutions (see Chapter 6.5.2)
- Select the electrode type according to the application
- The storage period should be as short as possible

A 6 months warranty is granted on material and manufacturing from date of delivery for all pH/ ORP sensors.

Selection guide - DULCOTEST® pH sensors

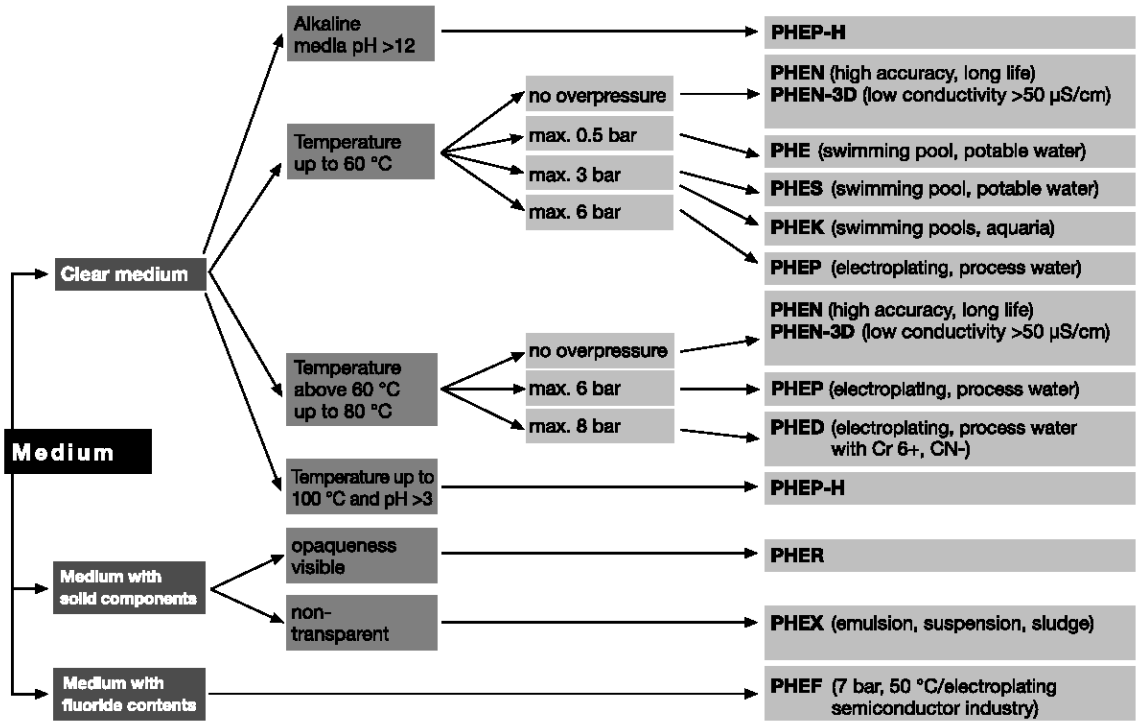

7.2 Sensors DULCOTEST® pH, ORP, fluoride and temperature

Selection guide - DULCOTEST® ORP sensors

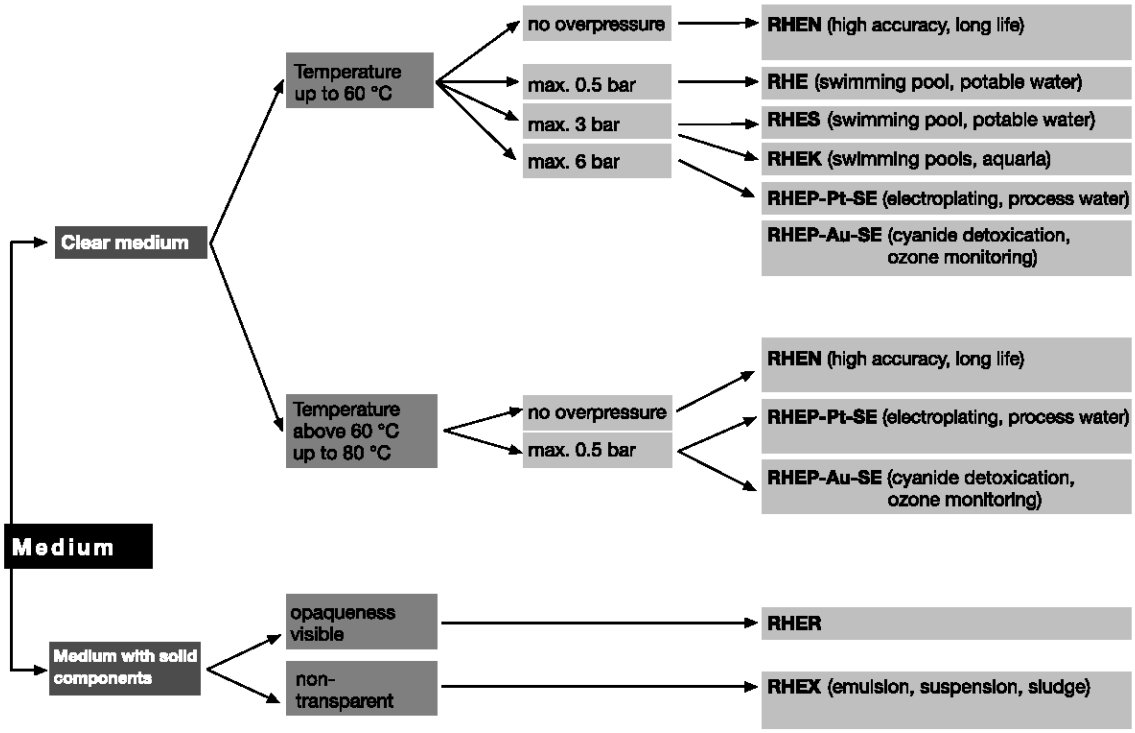

7.2 Sensors DULCOTEST® pH, ORP, fluoride and temperature

7.2.1 pH Sensors With SN6 Or Vario Pin

Series							
PHE	pH sensor						
	Properties						
	X	with solid electrolyte and circular gap diaphragm					
	K	with insensitive plastics shaft					
	N	refillable KCl electrode					
	E	Puncture electrode					
	R	with PTFE circular diaphragm					
	P	pressure tight up to 6 bar					
	D	2 ceramics diaphragms (double junction)					
	S	swimming pool electrode					
	F	resistant to hydrofluoric acid					
		unspecified: standard gel-filled electrode					
		Special equipment					
		T	with inbuilt temperature gauge				
		H	temperature up to 100 °C, alkali-resistant				
		L	vertical to horizontal installation				
			pH measuring range				
			112	pH measuring range: 1 - 12			
				Electrical connection to electrode			
				S	Plug for coax connector SN6		
				V	Vario Pin plug		
					Internal thread		
					E	Internal thread PG 13.5 for installation	
					L	without, laboratory electrode refillable with KCl	
						Diaphragm	
						3D	3 ceramics diaphragms

The PHE types are replaced by higher-value types PHES. PHES sensors are supplied when ordering PHE sensors. The conditions remain unaffected.

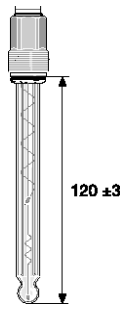

pk_6_016

PHES 112 SE

pH range	1 … 12
Temperature	0 … 60 °C
Max. pressure	3.0 bar
Min. conductivity	150 µS/cm
Membrane	Ceramic
Sensor shaft	Glass
Thread	PG 13.5
Typical applications	Swimming pool during pressurisation, drinking water, slightly contaminated industrial and waste water

	Installation length	Order no.
PHES 112 SE	120 ± 3 mm	150702
PHES 112 SE	225 ± 3 mm	150092

7.2 Sensors DULCOTEST® pH, ORP, fluoride and temperature

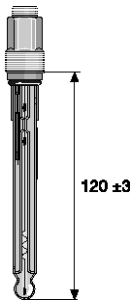

pk_6_019

PHEP 112 SE

pH range	1 … 12
Temperature	0 … 80 °C
Max. pressure	6.0 bar
Min. conductivity	150 µS/cm
Membrane	Ceramic
Sensor shaft	Glass
Installation length	120 ± 3 mm
Thread	PG 13,5
Mounting hole Ø min.	14.5 mm
Typical applications	Swimming pool during pressurisation for higher temperatures and pressures, drinking and industrial water, slightly contaminated waste water, electroplating, chemical industries

	Order no.
PHEP 112 SE	150041

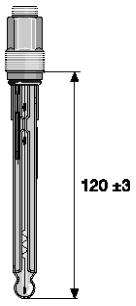

pk_6_019

PHEP-H 314 SE

pH range	3 … 14 (Note: use below pH 3 shortens the service life)
Temperature	0 … 100 °C
Max. pressure	6.0 bar up to 25 °C 3.0 bar up to 100 °C
Min. conductivity	150 µS/cm
Membrane	Ceramic
Sensor shaft	Glass
Installation length	120 ± 3 mm
Thread	PG 13.5
Stem diameter min.	12 mm
Typical applications	monitoring or control of chemical processes with neutral to highly-alkaline media and temperatures up to 100 °C

	Order no.
PHEP-H 314 SE	1024882

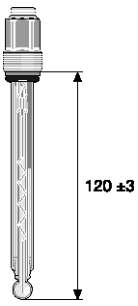

pk_6_018

PHER 112 SE

pH range	1 … 12
Temperature	0 … 80 °C
Max. pressure	6.0 bar
Min. conductivity	50 µS/cm
Electrolyte	with KCl supply (salt rings in the reference electrolyte)
Membrane	PTFE ring diaphragm
Sensor shaft	Glass
Installation length	120 ± 3 mm
Thread	PG 13,5
Typical applications	municipal and industrial waste water, industrial water, water in chemical industry and paper production, general, for water with suspended solid content.

	Order no.
PHER 112 SE	1001586

7.2 Sensors DULCOTEST® pH, ORP, fluoride and temperature

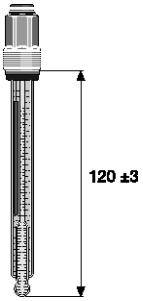

pk_6_017

PHEX 112 SE

pH range	1 … 12
Temperature	0 … 100 °C
Max. pressure	16.0 bar up to 25 °C 6.0 bar up to 100 °C
Min. conductivity	500 µS/cm
Membrane	Circular gap diaphragm (solid electrolyte)
Sensor shaft	Glass
Thread	PG 13,5
Typical applications	waste water, industrial water, process chemistry, emulsions, suspensions, protein-containing media, sulphide-containing media (nor for chlorine-/fluoride-containing media and at temperature fluctuations), in general for water with a high solid fraction, not suitable for use in clear water.

	Installation length	Order no.
PHEX 112 SE	120 ± 3 mm	305096
PHEX 112 SE	225 ± 3 mm	150061

ex HD works

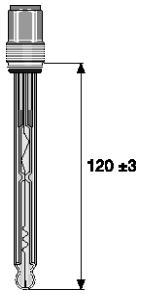

pk_6_022

PHED 112 SE

pH range	1 … 12
Temperature	0 … 80 °C
Max. pressure	8.0 bar
Min. conductivity	150 µS/cm
Membrane	Double Junction
Sensor shaft	Glass
Installation length	120 ± 3 mm
Thread	PG 13,5
Typical applications	drinking water, industrial water, slightly contaminated waste water, cooling tower water

	Order no.
PHED 112 SE	741036

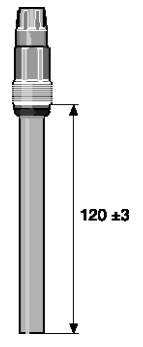

pk_6_007

PHEF 012 SE

pH range	0 … 12
Temperature	0 … 50 °C
Max. pressure	7.0 bar
Min. conductivity	150 µS/cm
Membrane	HDPE ring diaphragm, flat (Double Junction)
Sensor shaft	Epoxy
Installation length	120 ± 3 mm
Thread	PG 13,5
Typical applications	achieves a significantly longer service life in hydrofluoric acidic fluids as compared to standard pH sensors, e.g. in wastewaters from the chip industry or electroplating applications.

The sensor is protected against dirt by the flat glass membrane and the circumferential flat PE diaphragm.

	Order no.
PHEF 012 SE	1010511

7.2 Sensors DULCOTEST® pH, ORP, fluoride and temperature

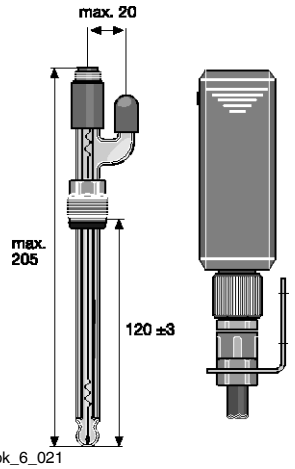

pk_6_021

PHEN 112 SE

pH range	1 … 12
Temperature	0 … 80 °C
Max. pressure	Atmospheric pressure
Min. conductivity	150 µS/cm
Membrane	Ceramic
Sensor shaft	Glass
Installation length	120 ± 3 mm
Thread	PG 13,5
Typical applications	Waste water

Supplied without PE storage container an tubing

	Order no.
PHEN 112 SE	305090

	Order no.
PE storage container with connectors and tubing	305058

We recommend installation approx. 0.5-1 m above sample fluid level

	Capacity ml	Order no.
KCl solution, 3 molar	250	791440
KCl solution, 3 molar	1,000	791441

PHEN 112 SE 3D

pH range	1 … 12
Temperature	0 … 80 °C
Max. pressure	Atmospheric pressure
Min. conductivity	50 µS/cm
Membrane	3 ceramic diaphragms
Sensor shaft	Glass
Installation length	120 ± 3 mm
Thread	PG 13,5
Typical applications	waste water, lower conductivity

	Order no.
PHEN 112 SE 3D	150078

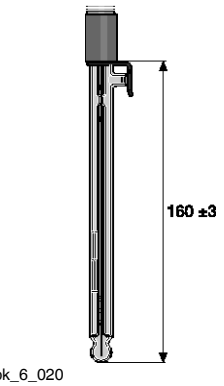

pk_6_020

PHEN 012 SL

pH range	0 … 12
Temperature	0 … 80 °C
Max. pressure	Atmospheric pressure
Min. conductivity	150 µS/cm
Membrane	Ceramic
Sensor shaft	Glass
Installation length	160 ± 3 mm
Thread	–
Typical applications	Manual measurement in laboratory

	Order no.
PHEN 012 SL	305078

7.2 Sensors DULCOTEST® pH, ORP, fluoride and temperature

PHEN 012 SL 3D

pH range	0 … 12
Temperature	0 … 80 °C
Max. pressure	Atmospheric pressure
Min. conductivity	50 µS/cm
Membrane	3 ceramic diaphragms
Sensor shaft	Glass
Installation length	160 ± 3 mm
Thread	–
Typical applications	laboratory, lower conductivity

	Order no.
PHEN 012 SL 3D	791508

PHEK 112 S

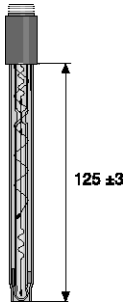

pk_6_023

pH range	1 … 12
Temperature	0 … 60 °C
Max. pressure	3.0 bar
Min. conductivity	150 µS/cm
Membrane	Glass fiber
Sensor shaft	Polycarbonate
Installation length	125 ± 3 mm
Thread	–
Typical applications	Hand-held measurement in swimming pool, potable water

	Order no.
PHEK-112-S	305051

PHEK 112 SE

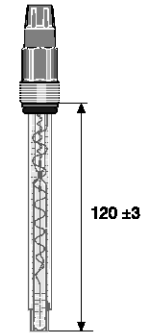

pk_6_090

pH range	1 … 12
Temperature	0 … 60 °C
Max. pressure	3.0 bar
Min. conductivity	150 µS/cm
Membrane	Ceramic
Sensor shaft	Polycarbonate
Installation length	120 ± 3 mm
Thread	PG 13.5
Stem diameter min.	12 mm
Typical applications	swimming pool at elevated sample water pressures, drinking water, slightly contaminated industrial and waste water, aquaria

	Order no.
PHEK 112 SE	1028457

ex HD works

PHEK-L 112 SE

pH range	1 … 12
Temperature	0 … 60 °C
Max. pressure	3.0 bar
Min. conductivity	150 µS/cm
Membrane	Ceramic

7.2 Sensors DULCOTEST® pH, ORP, fluoride and temperature

Sensor shaft	Polycarbonate
Installation length	120 ± 3 mm
Installation position	vertically to horizontally
Thread	PG 13.5
Stem diameter min.	12 mm
Typical applications	swimming pool at elevated sample water pressures, drinking water, slightly contaminated industrial and waste water, aquaria. Horizontal installation possible.

	Order no.
PHEK-L 112 SE	1034918

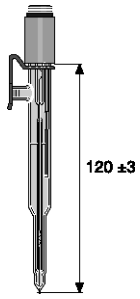

pk_6_025

PHEE 112 S

pH range	1 … 12
Temperature	0 … 60 °C
Max. pressure	Atmospheric pressure
Min. conductivity	–
Membrane	3 ceramic diaphragms
Sensor shaft	Glass
Installation length	120 ± 3 mm
Thread	–
Typical applications	pH measurement in foodstuffs, e.g. meat, cheese, non sterilisable

	Order no.
PHEE 112 S	791094

	Capacity ml	Order no.
Cleaning fluid Pepsin/hydrochloric acid	250	791443

PHEPT 112 VE

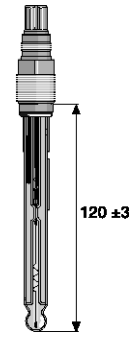

pk_6_068

With integrated Pt 100 enclosed in glass shaft and Vario Pin plug with gold plated contacts.

pH range	1 … 12
Temperature	0 … 80 °C
Max. pressure	6.0 bar
Min. conductivity	150 µS/cm
Membrane	Ceramic
Sensor shaft	Glass
Installation length	120 ± 3 mm
Thread	PG 13.5
Typical applications	swimming pool during pressurisation for higher temperatures and pressures, drinking and industrial water, slightly contaminated waste water, electroplating, chemical industries

	Order no.
PHEPT 112 VE	1004571

Accessory signal leads for electrodes with Vario Pin plug

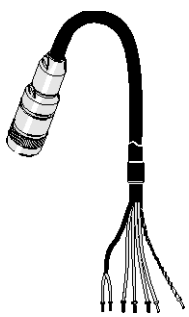
pk_6_069

Pre-assembled 6-core signal leads with Vario Pin plug for connection to electrode type PHEPT 112 VE.

	Length	Order no.
Vario Pin signal lead VP 6-ST/ 2 m	2 m	1004694
Vario Pin signal lead VP 6-ST/ 5 m	5 m	1004695
Vario Pin signal lead VP 6-ST/10 m	10 m	1004696

7.2 Sensors DULCOTEST® pH, ORP, fluoride and temperature

7.2.2 pH Sensors With Fixed Cable

Series									
PHE	pH sensor								
	Properties								
	K	with insensitive plastics shaft							
	N	refillable KCl electrode							
	D	with double diaphragm (double junction)							
		Special equipment							
		T	with inbuilt temperature gauge						
			pH measuring range						
			112	pH measurement range: 1...12					
				Electrical connection to electrode					
				F	fixed cable electrode				
					Internal thread				
					E	Internal thread			
					L	without, laboratory electrode refillable			
						Cable diameter			
						3	cable diameter 3 mm		
						5	cable diameter 5 mm		
							Cable length		
							01	cable length in metres	
								Electrical connection at device	
								S	SN6
								D	DIN
								B	BNC
								O	without connector
								M	SN6 male

The technical data correspond to the pH sensors with SN6 plug (see chap. 7.2.1).

NEW: The fixed cable electrodes with threaded male adapter, type … FE are fitted with a rotating threaded sleeve. This facilitates installation in in-line probe fittings because you rotate only the threaded sleeve and not the whole sensor when installing.

The PHE types are replaced by higher-value types PHES. PHES sensors are supplied when ordering PHE sensors. The conditions remain unaffected.

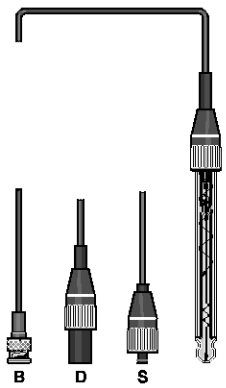

pk_6_024

Type PHES 112 F

pH sensor, gel-filled, with fixed coax cable and device plug, no internal thread.

	Cable length m	Device plug	Order no.
PHES 112 F 301 S	1	SN6	304976
PHES 112 F 501 D	1	DIN	304978
PHES 112 F 301 B	1	BNC	304980
PHES 112 F 303 B	3	BNC	304981

7.2 Sensors DULCOTEST® pH, ORP, fluoride and temperature

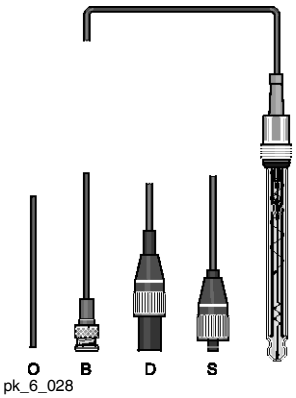

pk_6_028

Type PHES 112 FE

	Cable length m	Device plug	Order no.
PHES 112 FE 303 S	3	SN6	304984
PHES 112 FE 310 S	10	SN6	304985
PHES 112 FE 503 D	3	DIN	304986
PHES 112 FE 303 B	3	BNC	304988
PHES 112 FE 310 O	10	–	304990

Further types on request.

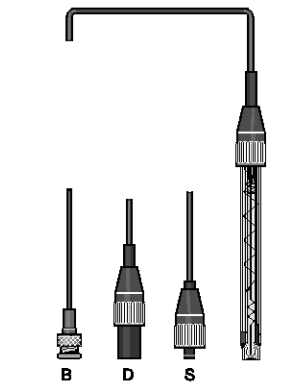

pk_6_027

Type PHEK 112 F

pH sensor with polycarbonate plastic stem, glass diaphragm guard, with fixed coaxial cable and device connector, without internal thread.

	Cable length m	Device plug	Order no.
PHEK 112 F 301 S	1	SN6	304994
PHEK 112 F 501 D	1	DIN	304995
PHEK 112 F 301 B	1	BNC	304996

Further types on request.

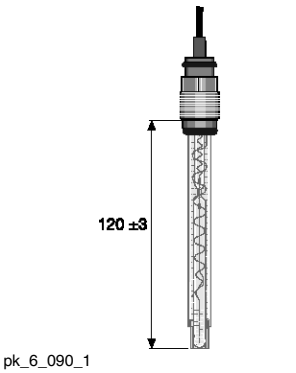

pk_6_090_1

Type PHEK 112 FE

pH sensor with polycarbonate plastic stem, glass diaphragm guard, fixed coaxial cable and device connector and connection thread

	Order no.
PHEK 112 FE 303 B	1028458

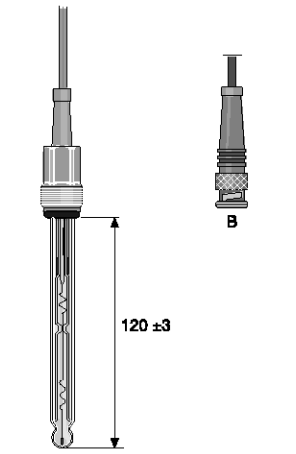

Type PHED 112 FE

	Cable length m	Device plug	Order no.
PHED 112 FE 303 B	3	BNC	741038

Further types on request.

7.2 Sensors DULCOTEST® pH, ORP, fluoride and temperature

7.2.3 ORP Sensors With SN6 Connector

Series						
RHE	ORP sensor					
	Properties					
	X	with solid electrolyte and circular gap diaphragm				
	K	with insensitive plastics shaft				
	P	pressure tight up to 6 bar				
	R	with PTFE circular diaphragm				
	N	refillable KCl electrode				
	S	swimming pool electrode				
		unspecified: standard gel-filled electrode				
		Special equipment				
		L	vertical to horizontal installation			
			Electrode material			
			Pt	Platinum (pin)		
			Au	Gold (pin)		
				Electrical connection to electrode		
				S	Plug for coax connector SN6	
					Internal thread	
					E	PG 13.5

Selection guide - DULCOTEST® ORP sensors see p. → 7-10

The RHE types are replaced by higher-value types RHES. RHES sensors are supplied when ordering RHE sensors. The conditions remain unaffected.

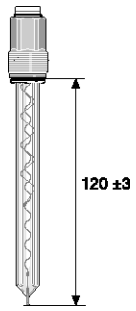

pk_6_031

RHES-Pt-SE

Temperature	0 … 60 °C
Max. pressure	3 bar
Min. conductivity	150 µS/cm
Membrane	Ceramic
Sensor shaft	Glass
Installation length	120 ± 3 mm
Thread	PG 13,5
Typical applications	swimming pool at elevated sample water pressures, drinking water, lightly contaminated service and waste water

	Order no.
RHES-Pt-SE	150703

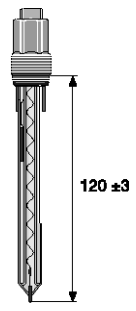

pk_6_035

RHEP-Pt-SE

Temperature	0 … 80 °C
Max. pressure	6.0 bar
Min. conductivity	150 µS/cm
Membrane	Ceramic
Sensor shaft	Glass
Installation length	120 ± 3 mm
Thread	PG 13,5
Mounting hole Ø min.	15 mm
Typical applications	swimming pool during pressurisation for higher temperatures and pressures, drinking and industrial water, slightly contaminated waste water, electroplating, chemical applications, for higher temperatures and pressures. Not suitable for media containing ozone

	Order no.
RHEP-Pt-SE	150094

7.2 Sensors DULCOTEST® pH, ORP, fluoride and temperature

RHEP-Au-SE

with gold pin electrode

Temperature	0 … 80 °C
Max. pressure	6.0 bar
Min. conductivity	150 µS/cm
Membrane	Ceramic
Sensor shaft	Glass
Installation length	120 ± 3 mm
Thread	PG 13,5
Mounting hole Ø min.	15 mm
Typical applications	Cyanide detoxification, ozone monitoring

	Order no.
RHEP-Au-SE	1003875

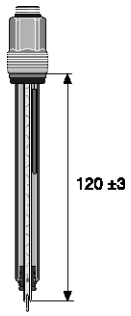

pk_6_034

RHER-Pt-SE

Temperature	0 … 80 °C
Max. pressure	6.0 bar
Min. conductivity	50 µS/cm
Electrolyte	Electrolyte with KCl supplement (salt rings in the reference electrolyte)
Membrane	PTFE ring diaphragm
Installation length	120 ± 3 mm
Typical applications	Municipal and industrial waste water, drinking and industrial water, chemical applications, Paper production, food industry. In general for water with noticeable solid fraction.

	Order no.
RHER-Pt-SE	1002534

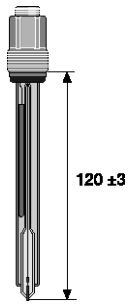

pk_6_033

RHEX-Pt-SE

Temperature	0 … 100 °C
Max. pressure	16 bar up to 25 °C 6 bar up to 100 °C
Min. conductivity	500 µS/cm
Membrane	circular gap (solid electrolyte)
Sensor shaft	Glass
Installation length	120 ± 3 mm
Thread	PG 13,5
Typical applications	Waste water, industrial water, process chemistry, emulsions, suspensions, protein-containing media, sulphide-containing media (nor for chlorine-/fluoride-containing media and at temperature fluctuations). In general for water with a high solid fraction. Not suitable for clear media.

	Order no.
RHEX-Pt-SE	305097

7.2 Sensors DULCOTEST® pH, ORP, fluoride and temperature

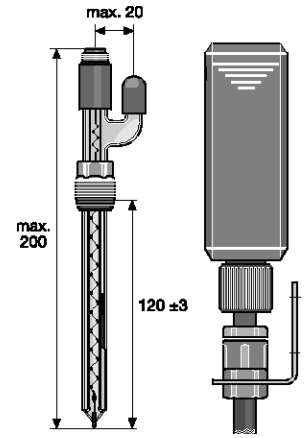

pk_6_032

RHEN-Pt-SE

Temperature	0 … 80 °C
Max. pressure	Operation at atmospheric pressure
Min. conductivity	150 µS/cm
Electrolyte	KCl electrolyte, refillable
Membrane	Ceramic
Sensor shaft	Glass
Installation length	120 ± 3 mm
Thread	PG 13,5
Typical applications	Waste water

	Order no.
RHEN-Pt-SE	305091

Supplied without PE storage container and tubing

Accessories

	Capacity ml	Order no.
PE storage container with connectors and tubing	–	305058
KCl solution, 3 molar	250	791440
KCl solution, 3 molar	1,000	791441

We recommend installation approx. 0.5-1 m above sample fluid level.

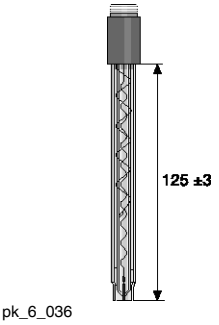

pk_6_036

RHEK-Pt-S

Temperature	0 … 60 °C
Max. pressure	Operation at atmospheric pressure
Min. conductivity	150 µS/cm
Membrane	Glass fibre
Sensor shaft	Polycarbonate
Thread	–
Installation length	125 ± 3 mm
Typical applications	Manual measurements of e.g. swimming pool, potable water etc.

	Order no.
RHEK-Pt-S	305052

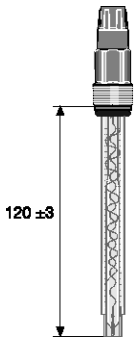

pk_6_091

RHEK-Pt-SE

Temperature	0 … 60 °C
Max. pressure	3.0 bar
Min. conductivity	150 µS/cm
Membrane	Ceramic
Sensor shaft	Polycarbonate
Thread	PG 13,5
Installation length	120 ± 3 mm
Typical applications	swimming pool at elevated sample water pressures, drinking water, lightly contaminated waste water

	Order no.
RHEK-Pt-SE	1028459

7.2 Sensors DULCOTEST® pH, ORP, fluoride and temperature

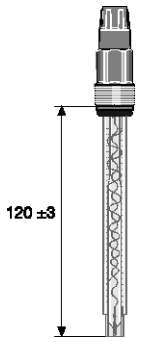

pk_6_091

RHEK-L Pt-SE

Temperature	0 … 60 °C
Max. pressure	3.0 bar
Min. conductivity	150 µS/cm
Membrane	Ceramic
Sensor shaft	Polycarbonate
Installation length	120 ± 3 mm
Installation position	vertically to horizontally
Thread	PG 13.5
Stem diameter min.	12 mm
Typical applications	swimming pool at elevated sample water pressures, drinking water, slightly contaminated waste water

	Order no.
RHEK-L Pt-SE	1034919

7.2 Sensors DULCOTEST® pH, ORP, fluoride and temperature

7.2.4 ORP Sensors With Fixed Cable

Series								
RHE	ORP sensor							
	Properties							
	K	Plastics shaft						
		Electrode material						
		Pt	Platinum					
			Electrical connection to electrode					
			F	Fixed cable electrode				
				Internal thread				
				E	internal thread PG 13.5			
					Cable diameter			
					3	cable diameter 3 mm		
					5	cable diameter 5 mm		
						Cable length		
						01	cable length in metres	
							Electrical connection at device	
							S	SN6
							D	DIN
							B	BNC

NEW: The fixed cable electrodes with threaded male adapter, type … FE ... are fitted with a rotating threaded sleeve. This facilitates installation in in-line probe fittings because you rotate only the threaded sleeve and not the whole sensor when installing.

The RHE types are replaced by higher-value types RHES. RHES sensors are supplied when ordering RHE sensors. The conditions remain unaffected.

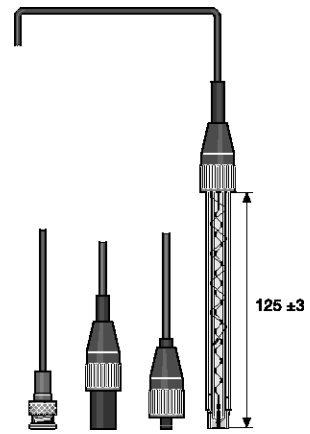

pk_6_037

Type RHES-Pt-FE

ORP sensor with Pt electrode probe gel-filled, with glass shaft, internal mounting thread PG 13.5 with fixed coax cable and device plug.

	Cable length m	Device plug	Order no.
RHES-Pt-FE 310 B	10	BNC	304993

Type RHES-Pt-F

ORP sensor with Pt electrode probe gel-filled, with glass shaft, with fixed coax cable and device plug, without internal mounting thread.

	Cable length m	Device plug	Order no.
RHES-Pt-F 303 B	3	BNC	304983

Type RHEK-Pt-F

ORP sensor with plastic shaft, Pt electrode with cover. Fixed coax cable and device plug, no internal mounting thread.

	Cable length m	Device plug	Order no.
RHEK-Pt-F 301 S	1	SN 6	304997
RHEK-Pt-F 501 D	1	DIN	304998

Further types on request.

7.2 Sensors DULCOTEST® pH, ORP, fluoride and temperature

7.2.5 Fluoride Sensors

DULCOTEST® fluoride sensors are ion-selective electrodes based on the potentiometic measurement principle. They are designed for determining the concentration of fluoride anions in aqueous solutions. These sensors have been optimised for use in monitoring the fluoridation of potable water in waterworks (measuring range up to 10 ppm FLEP 010 SE). For unpolluted clear waste water, the sensor type FLEP 100 SE with a measuring range up to 100 ppm can be used. The corresponding conditions must be observed.

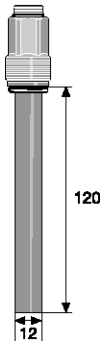

pk_6_095

FLE 010-SE

A 4-20 mA measurement transducer, a reference electrode and a temperature sensor for temperature compensation are required as well as the fluoride sensor.

Measured variable	Fluoride ion concentration
Reference method	photometric, see Chap. 8.9.3: Photometer DT2B
Measurement range	**with measuring transducer FPV1:** 0.05...10 mg/l **with measuring transducer FP100V1:** 0.5...100 mg/l
pH range	5.5 … 9.5
Temperature	1 … 35 °C
Max. pressure	7.0 bar (no pressure surges)
Intake flow	10…200 l/h
Intake flow (recommended)	20 l/h
Min. conductivity	100 µS/cm
Response time T95 max.	30 s (for conc. > 0.5 ppm)
Enclosure rating	IP 65
Shelf life	6 months
Installation length	120 mm
Shaft diameter	12.0 mm
Typical applications	monitoring the fluoridation of potable water in waterworks
Measurement and control equipment	D1C
In-line probe fitting	DLG IV

	Order no.
FLEP 010-SE / FLEP 0100-SE	1028279

Accessories

	Order no.
Measurement transducer 4-20 mA FPV1	1028280
Measurement transducer 4-20 mA FP 100 V1	1031331
Signal lead, sold by the meter 2 x 0.25 mm² Ø 4 mm	725122
Reference electrode, REFP-SE	1018458
Temperature sensor, Pt 100	305063
Polishing paste	559810

Panel-mounted measuring station

The panel-mounted measuring stations that could be ordered to date with part no.1010602 (230 V) and 1010603 (115 V) can now be ordered as measuring stations of the DULCOTROL® product range PWCA.

1 PWCA F000_1_0_A_0_0_0_0_x (230 V)

2 PWCA F000_1_0_C_0_0_0_0_x (115 V)

7.2 Sensors DULCOTEST® pH, ORP, fluoride and temperature

7.2.6 Temperature Sensors

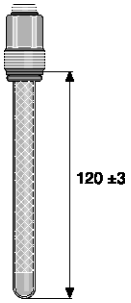

pk_6_026

Temperature	0 … 100 °C
Max. pressure	10.0 bar
Typical applications	Temperature measurement and pH temperature correction

	Order no.
Pt 100 SE	305063
Pt 1000 SE	1002856

7.3 DULCOTEST® Amperometric Sensors

7.3.1 Amperometric Sensors For Chlorine, Bromine, Chlorine Dioxide, Chlorite, Ozone, Dissolved Oxygen, Peracetic Acid And Hydrogen Peroxide

For optimum functioning of chlorine, bromine, chlorine dioxide and ozone sensors please note the following guidelines:

- Use DULCOMETER® measurement and control systems.
- Install only in ProMinent® DGM or DLG III in-line probe fittings.
- Defined flow between 30 and 60 l/h.
- Chlorine measurement must only take place when pH is stable: if not possible, see Chap. 6.5.
- Regular calibration with a Photometer (e.g. Type DT 1).

Important:

Amperometric sensors are not electrically isolated. When installing in external appliances (e.g. PLC), you should electrically isolate the supply voltage and the analogue input signal.

Summary of features:

- High zero point stability
- Compact design
- Integrated temperature correction
- Simple to install
- Simple to maintain
- Short running-in period
- Measurement signal virtually unaffected by flow

Selection guide - Amperometric sensors

Measured variable	Applications	Graduated measuring range	Connection to DULCOMETER®	Sensor type
Free chlorine	Drinking water, swimming pool	0.01–100 mg/l	D1C, D2C, ProMcon	CLE 3-mA-xppm, CLE 3.1-mA-xppm
Free chlorine	Drinking water, swimming pool water, in situ electrolysis (without diaphragm)	0.02-10 mg/l	D1C, D2C, ProMcon	CLO 1-mA-xppm
Free chlorine	Hot water up to 70 °C (legionella), in situ electrolysis (without diaphragm)	0.02-2 mg/l	D1C, D2C, ProMcon	CLO 2-mA-2ppm
Free chlorine	Drinking water, swimming pool	0.01–50 mg/l	DMT	CLE 3-DMT-xppm
Free chlorine	Drinking water, swimming pool	0.01–10 mg/l	DULCOMARIN® II	CLE 3-CAN-xppm, CLE 3.1-CAN-xppm
Free chlorine	Drinking water, swimming pool	0.05-5 mg/l	COMPACT	CLB 2-µA-xppm
Free chlorine	Cooling water, process water, waste water, water with higher pG values (stable)	0.01-10 mg/l	D1C, D2C, ProMcon	CBR 1-mA-xppm
Total available chlorine	Swimming pool water with chlorine-organic disinfectants	0.02–10 mg/l	D1C, D2C, ProMcon	CGE 2-mA-xppm
Total available chlorine	Swimming pool water with chlorine-organic disinfectants	0.01–10 mg/l	DULCOMARIN® II	CGE 2- CAN-xppm
Total chlorine	Drinking, service, process and cooling water	0.01–10 mg/l	D1C, D2C, ProMcon	CTE 1-mA-xppm
Total chlorine	Drinking, service, process and cooling water	0.01–10 mg/l	DMT	CTE 1-DMT-xppm
Total chlorine	Drinking, service, process and cooling water	0.01–10 mg/l	DULCOMARIN® II	CTE 1-CAN-xppm
Combined chlorine	Swimming pool water	0.02–2 mg/l	D2C	CTE 1-mA-2 ppm + CLE 3.1-mA-2 ppm
Combined chlorine	Swimming pool water	0.01–10 mg/l	DULCOMARIN® II	CTE 1-CAN-xppm + CLE 3.1-CAN-xppm
Total available bromine	Cooling water, swimming pool water, whirlpool water, bromine with bromorganic disinfectants (e.g. BCDMH)	0.2–10 mg/l	D1C, ProMcon	BRE 1-mA-xppm
Total available bromine	Cooling water, swimming pool water, whirlpool water, bromine with inorganic bromine compounds (e.g. NaBr/HOCl)	0.2–10 mg/l	D1C, ProMcon	BRE 2-mA-xppm
Total available bromine	Cooling water, swimming pool water, whirlpool water with bromorganic or inorganic bromine compounds	0.02-10 mg/l	DULCOMARIN® II	BRE 3-CAN-10 ppm
Free and bound bromine	Cooling water, process water, waste water, water with higher pH values (stable)	0.02-20 mg/l	D1C, ProMcon	CBR 1-mA-xppm

7.3 DULCOTEST® Amperometric Sensors

Measured variable	Applications	Graduated measuring range	Connection to DULCOMETER®	Sensor type
Chlorine dioxide	Drinking water	0.01–10 mg/l	D1C, D2C, DULCOMARIN® II	CDE 2-mA-xppm
Chlorine dioxide	Bottle washer system	0.02–2 mg/l	D1C, D2C, DULCOMARIN® II	CDP 1-mA
Chlorine dioxide	Hot water up to 60 °C, cooling water, waste water, irrigation water	0.01-10 mg/l	D1C, D2C, DULCOMARIN® II	CDR 1-mA-xppm
Chlorite	Drinking, wash water	0.02–2 mg/l	D1C, DULCOMARIN® II	CLT 1-mA-xppm
Ozone	Drinking, service, process, swimming pool water	0.02–2 mg/l	D1C, ProMcon	OZE 3-mA-xppm
Dissolved oxygen	Drinking, surface water	2–20 mg/l	D1C	DO 1-mA-xppm
Dissolved oxygen	Activated sludge tank, sewage treatment plant	0.1–10 mg/l	D1C	DO 2-mA-xppm
Peracetic acid	CIP, antiseptic food filling process	1–2,000 mg/l	D1C	PAA 1-mA-xppm
Hydrogen peroxide	Clear water, fast control	1–2,000 mg/l	PEROX controller	Perox sensor PEROX-H2.10-P
Hydrogen peroxide	Process, swimming pool water	0.5–2,000 mg/l	D1CA, ProMcon	PER1-mA-xppm

7.3.2 Chlorine Sensors

Chlorine dissolved in water is present in different forms:

Free (active) chlorine: Cl_2, HOCl (hypochlorous acid), OCl^- (hypochlorite) recommended sensors: Type CLE, reference method: DPD1.

Combined chlorine: mono, di, trichloramine. The measuring result of the type CLE is deducted from the measuring result of the type CTE. Reference method: DPD4 minus DPD1.

Organic combined chlorine: Of isocyanuric acid/isocyanurate bound chlorine (total available chlorine) and the resulting free (effective) chlorine; recommended sensor: type CGE, reference method: DPD1.

Total chlorine: Sum of free and combined chlorine; recommended sensor: Type CTE, reference method: DPD 4.

Applications: Chlorine measurement in drinking, swimming pool, process, industrial water and water of similar quality e.g. seawater/brine with up to 15 % chloride content. For chlorine measurements at high pH values (8…9.5), we recommend the chlorine sensors type CGE, CTE or a system for metering of pH buffer solutions in the sample water bypass (see Chap. 6.5).

Guidelines for device usage: The sensors type CLE may not be used in the presence of isocyanuric acid/chlorine stabilisers! In case of chlorination by electrolysis without separation by a diaphragm, the types CLE 3.1, CTE and CGE do not function properly. The sensors with the suffix -mA are used with the measurement and control devices D1C, D2C and DULCOMARIN®. The sensors with the suffix -4P are used with the earlier WS controllers and for metering pumps with integrated chlorine controllers. DMT-type sensors are used for the DMT transducer. CAN-type sensors are used with the DULCOMARIN® II swimming pool controller.

7.3 DULCOTEST® Amperometric Sensors

Selection Guide

		CLE 3	CLE 3.1	CLO 1	CLO 2	CLB 2	CBR 1	CGE 2	CTE 1
Measured variable	Free chlorine	x	x	x	x	x	x		
	Total available chlorine (cyanuric acid derivatives)							x	x
	Total chlorine							x	x
Selectivity of free chlorine	raised		x						
	yes	x		x	x	x	x		
	no							x	x
Application	Public swimming pools	x	x			x		(x)	
	Private swimming pools	x	x	x		x		x	
	Drinking water	x	x		x	x			x
	Cooling water						x		x
	Waste water						x		x
Disinfectant	chlorine gas, hypochlorite, electrolysis with diaphragm	x	x	x	x	x	x		x
	electrolysis without diaphragm			x	x	x			
	chlorine-containing cyanuric acid derivatives							x	
Specifications	Measuring range [ppm]	0.01-100	0.01-10	0.02-2	0.02-2	0.05-5	0.01-10	0.02-10	0.01-10
	pH range	5.5-8	5.5-8	5-9	5-9	5-9	5-9.5	5.5-9.5	5.5-9.5
	Temperature [°C]	5-45	5-45	5-45	5-70	5-45	5-45	5-45	5-45
	Max. pressure [bar]	1	1	8	8	8	1	3	3
Installation	open outlet	x	x	x	x	x	x	x	x
	direct installation in the circuit			x	x	x			

[1] Interference, such as film-forming substances, chemical residue, flow, conductivity

7.3 DULCOTEST® Amperometric Sensors

Measured variable free chlorine

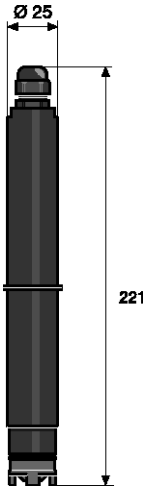

pk_6_039

CLE 3-mA

Measured variable	free chlorine (hypochlorus acid HOCl)
Reference method	DPD1
pH range	5.5 … 8.0
Temperature	5 … 45 °C
Max. pressure	1.0 bar
Intake flow	30…60 l/h (in DGM or DLG III)
Supply voltage	16…24 V DC (two-wire technology)
Output signal	4…20 mA ≈ measuring range, temperature-compensated, uncalibrated, not electrically isolated
Typical applications	CLE 3-mA-0,5 ppm: Drinking water; CLE 3-mA-2.0/10 ppm: Swimming pools (surfactant-free)
Measurement and control equipment	D1C, D2C, ProMcon
In-line probe fitting	DGM, DLG III
Measuring principle	amperometric, 2 electrodes, diaphragm-covered

	Measuring range	Order no.
CLE 3-mA-0.5 ppm	0.01…0.5 mg/l	792927
CLE 3-mA-2 ppm	0.02…2.0 mg/l	792920
CLE 3-mA-5 ppm	0.01…5.0 mg/l	1033392
CLE 3-mA-10 ppm	0.10…10.0 mg/l	792919
CLE 3-mA-20 ppm	0.20…20.0 mg/l	1002964
CLE 3-mA-50 ppm	0.50…50.0 mg/l	1020531
CLE 3-mA-100 ppm	1.00…100.0 mg/l	1022786

Chlorine sensors with 100 ml electrolyte

You require assembly kit (order no. 815079) for the initial installation of the chlorine sensors into the DLG III in-line probe housing.

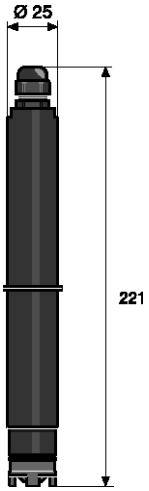

pk_6_039

CLE 3.1-mA

Measured variable	free chlorine (hypochlorous acid HOCl) with large proportions of bound chlorine; to detect bound chlorine using D2CA and Sensor for Total Chlorine type CTE 1-mA
Reference method	DPD1
pH range	5.5 … 8.0
Temperature	5 … 45 °C
Max. pressure	1.0 bar
Intake flow	30…60 l/h (in DGM or DLG III)
Supply voltage	16…24 V DC (two-wire technology)
Output signal	4…20 mA ≈ measuring range, temperature-compensated, uncalibrated, not electrically isolated
Typical applications	swimming pool, drinking water with higher proportions of bound chlorine
Measurement and control equipment	D1C, D2C, ProMcon
In-line probe fitting	DGM, DLG III
Measuring principle	amperometric, 2 electrodes, diaphragm-covered

	Measuring range	Order no.
CLE 3.1-mA-0.5 ppm	0.01…0.5 mg/l	1020530
CLE 3.1-mA-2 ppm	0.02…2.0 mg/l	1018369
CLE 3.1-mA-5 ppm	0.01…5.0 mg/l	1019398
CLE 3.1-mA-10 ppm	0.10…10.0 mg/l	1018368

Chlorine sensors with 100 ml electrolyte

You require assembly kit (order no. 815079) for the initial installation of the chlorine sensors into the DLG III in-line probe housing.

7.3 DULCOTEST® Amperometric Sensors

Signal leads see Sensor Accessories, p. → 7-62

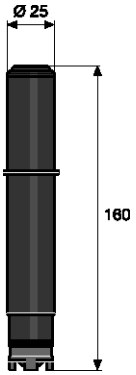

pk_6_042

CLE 2.2-4P

Measured variable	free chlorine, (hypochlorous acid HOCl)
Reference method	DPD1
pH range	5.5 … 8.0
Temperature	5 … 45 °C
Max. pressure	1.0 bar
Intake flow	30…60 l/h (in DGM or DLG III)
Power supply	±7,5 V DC (4 P)
Output signal	4…20 mA , 0...2 V DC ≈ measuring range, temperature-compensated, uncalibrated, not electrically isolated
Typical applications	Swimming pools, drinking water (surfactant-free)
Measurement and control equipment	D_4a (metering pump with integrated controller), CLWS
In-line probe fitting	DGM, DLG III
Measuring principle	amperometric, 2 electrodes, diaphragm-covered

	Measuring range	Order no.
CLE 2.2-4P	0.10…20.0 mg/l	914958

Chlorine sensors with 100 ml electrolyte

You require assembly kit (order no. 815079) for the initial installation of the chlorine sensors into the DLG III in-line probe housing.

Signal leads see Sensor Accessories, p. → 7-62

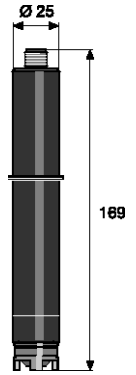

pk_6_038

CLE 3-DMT

Sensor for use with the DMT "chlorine" measurement transducer.

Measured variable	free chlorine (hypochlorous acid HOCl)
Reference method	DPD1
pH range	5.5 … 8.0
Temperature	5 … 45 °C
Max. pressure	1.0 bar
Intake flow	30…60 l/h (in DGM or DLG III)
Supply voltage	3.3 V DC (5 P)
Output signal	0...1 V DC, uncalibrated, not temperature compensated, not electrically isolated
Temperature measurement	about the integrated Pt 1000. The temperature compensation is carried out in DMT.
Typical applications	Swimming pools, drinking water (surfactant-free)
Measurement and control equipment	DMT
In-line probe fitting	DGM, DLG III
Measuring principle	amperometric, 2 electrodes, diaphragm-covered

	Measuring range	Order no.
CLE 3-DMT-5 ppm	0.01…5.0 mg/l	1005511
CLE 3-DMT-50 ppm	0.05…50.0 mg/l	1005512

Chlorine sensors with 100 ml electrolyte

You require assembly kit (order no. 815079) for the initial installation of the chlorine sensors into the DLG III in-line probe housing.

Signal leads see Sensor Accessories, p. → 7-62

7.3 DULCOTEST® Amperometric Sensors

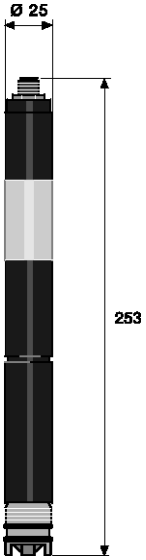

pk_6_096

CLE 3-CAN

Sensor for connection to a CANopen interface (e.g. DULCOMARIN® II swimming pool controller)

Measured variable	free chlorine (hypochlorous acid HOCl)
Reference method	DPD1
pH range	5.5 … 8.0
Temperature	5 … 45 °C
Max. pressure	1.0 bar
Intake flow	30…60 l/h (in DGM or DLG III)
Power supply	Via CAN interface (11 - 30 V)
Output signal	uncalibrated, temperature compensated, electrically isolated
Typical applications	swimming pool, drinking water (surfactant-free)
Measurement and control equipment	DULCOMARIN® II
In-line probe fitting	DGM, DLG III
Compatibility	CANopen bus systems
Measuring principle	amperometric, 2 electrodes, diaphragm-covered

	Measuring range	Order no.
CLE 3-CAN-10 ppm	0.01…100.0 mg/l	1023425

Chlorine sensors with 100 ml electrolyte

You require assembly kit (order no. 815079) for the initial installation of the chlorine sensors into the DLG III in-line probe housing.

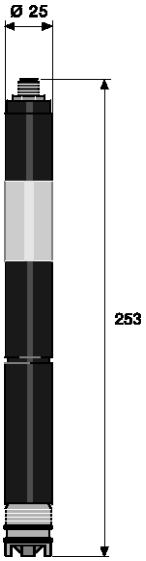

pk_6_096

CLE 3.1-CAN

Sensor for connection to a CANopen interface (e.g. swimming pool controller DULCOMARIN® II)

Measured variable	free chlorine (hypochlorous acid HOCl) with large proportions of bound chlorine; to detect bound chlorine using DULCOMARIN® II and Sensor for Total Chlorine type CTE 1-CAN
Reference method	DPD1
pH range	5.5 … 8.0
Temperature	5 … 45 °C
Max. pressure	1.0 bar
Intake flow	30…60 l/h (in DGMa or DLG III)
Power supply	Via CAN interface (11 – 30 V)
Output signal	uncalibrated, temperature compensated, electrically isolated
Typical applications	swimming pool, drinking water with a higher percentage of bound chlorine (surfactant-free)
Measurement and control equipment	DULCOMARIN® II
In-line probe fitting	DGM, DLG III
Compatibility	CANopen bus systems
Measuring principle	amperometric, 2 electrodes, diaphragm-covered

	Measuring range	Order no.
CLE 3.1-CAN-10 ppm	0.01…10.0 mg/l	1023426

Chlorine sensors with 100 ml electrolyte

You require assembly kit (order no. 815079) for the initial installation of the chlorine sensors into the DLG III in-line probe housing.

7.3 DULCOTEST® Amperometric Sensors

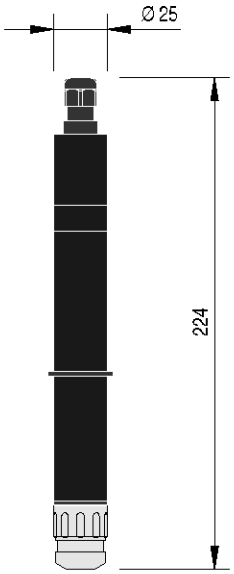

P_DT_0072_SW1

CLO 1-mA

Measured variable	free chlorine (hypochlorus acid HOCl)
Reference method	DPD1
pH range	5.0 … 9.0
Temperature	5 … 45 °C
Max. pressure	8.0 bar
Intake flow	30…60 l/h (in DGM or DLG III), constant flow as flow-dependent signal
Power supply	16...24 V DC (2-wire)
Output signal	4…20 mA = Measuring range, temperature-compensated, uncalibrated, not electrically isolated
Typical applications	Swimming pool, uncontaminated drinking water and industrial service water, and can also be used together with diaphragm-free electrolysis processes
Measurement and control equipment	D1C, D2C, ProMcon
In-line probe fitting	DGM, DLG III to 60 °C, special fitting for 60 -70 °C (on request)
Measuring principle	amperometric, 3 electrodes, no diaphragm

	Measuring range	Order no.
CLO 1-mA-2 ppm	0.02…2.0 mg/l	1033871
CLO 1-mA-10 ppm	0.10…10.0 mg/l	1033870

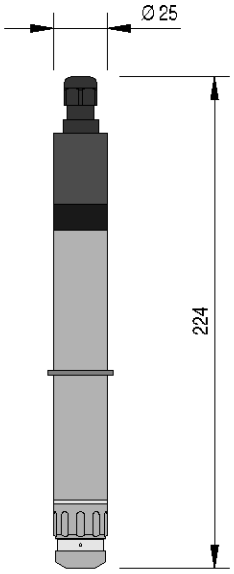

P_DT_0073_SW1

CLO 2-mA

Measured variable	free chlorine (hypochlorus acid HOCl)
Reference method	DPD1
pH range	5.0 … 9.0
Temperature	5 … 70 °C
Max. pressure	8.0 bar
Intake flow	30…60 l/h (in DGM or DLG III), constant flow as flow-dependent signal
Power supply	16...24 V DC (2-wire)
Output signal	4…20 mA = Measuring range, temperature-compensated, uncalibrated, not electrically isolated
Typical applications	Hot water up to 70 °C, combating legionella, uncontaminated drinking water and industrial service water, can also be used together with diaphragm-free electrolysis processes
Measurement and control equipment	D1C, D2C, ProMcon
In-line probe fitting	DGM, DLG III to 60 °C, special fitting for 60 -70 °C (on request)
Measuring principle	amperometric, 3 electrodes, no diaphragm

	Measuring range	Order no.
CLO 2-mA-2 ppm	0.02…2.0 mg/l	1033878

7.3 DULCOTEST® Amperometric Sensors

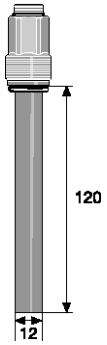

pk_6_095

CLB 2-µA

Measured variable	free chlorine (hypochlorous acid HOCl)
Reference method	DPD1
pH range	5.0 … 9.0
Temperature	5 … 45 °C
Max. pressure	8.0 bar
Intake flow	30…60 l/h (in DGMA), constant flow needed as flow-dependent signal
Power supply	16...24 V DC (2-wire)
Output signal	Non-amplified primary current signal, non-temperature-compensated, uncalibrated, not electrically isolated
Typical applications	Private swimming pool, can also be used together with diaphragm-free electrolysis processes for the generation of chlorine
Measurement and control equipment	Compact controller
In-line probe fitting	DGM, DLG III
Measuring principle	amperometric, 3 electrodes, no diaphragm

	Measuring range	Order no.
CLB 2-µA-5 ppm	0.05…5.0 mg/l	1038902

Available from 2nd quarter of 2011

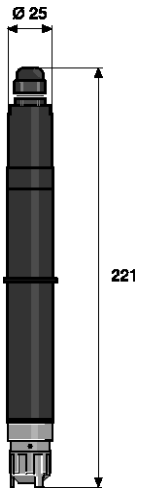

pk_6_040

CBR 1-mA

Measured variable	free chlorine (hypochlorous acid HOCl, OCl^-), free bromine, bound bromine
Reference method	DPD1
pH range	5.0 … 9.5
Temperature	5 … 45 °C
Max. pressure	1.0 bar
Intake flow	30…60 l/h (in DGM, DLG II)
Power supply	16...24 V DC (2-wire)
Output signal	4…20 mA = Measuring range, temperature-compensated, uncalibrated, not electrically isolated
Typical applications	Cooling water, Process water, Waste water, Water with higher pH values (stable pH)
Measurement and control equipment	D1C, ProMcon
In-line probe fitting	DGM, DLG III
Measuring principle	amperometric, 2 electrodes, diaphragm-covered

	Measuring range	Order no.
CBR 1-mA-0,5 ppm	0.01…0.5 mg/l…*	1038016
CBR 1-mA-2 ppm	0.02…2.0 mg/l…*	1038015
CBR 1-mA-10 ppm	0.10…10.0 mg/l…*	1038014

* Measuring range based on chlorine. The upper and lower limits of the measuring range are increased by a factor of 2.25 when measuring bromine, e.g. CBR 1-mA-0.5 ppm: 0.0225 ... 1.125 ppm.

Available from 1st quarter of 2011.

7.3 DULCOTEST® Amperometric Sensors

Measured variable organic combined chlorine and free chlorine (total available chlorine)

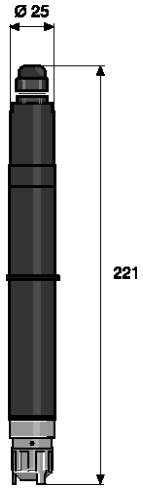

pk_6_040

CGE 2-mA

Measured variable	total available chlorine: sum of organically combined chlorine (e.g. combined in cyanuric acid) and free chlorine
Reference method	DPD1
pH range	5.5 … 9.5
Temperature	5 … 45 °C
Max. pressure	3.0 bar
Intake flow	30…60 l/h (in DGM or DLG III)
Supply voltage	16…24 V DC (two-wire system)
Output signal	4…20 mA ≈ measuring range, temperature-compensated, uncalibrated, not electrically isolated
Typical applications	Swimming pools
Measurement and control equipment	D1C, D2C, ProMcon
In-line probe fitting	DGM, DLG III
Measuring principle	amperometric, 2 electrodes, diaphragm-covered

	Measuring range	Order no.
CGE 2-mA-2 ppm	0.02…2.0 mg/l	792843
CGE 2-mA-10 ppm	0.10…10.0 mg/l	792842

Chlorine sensors with 50 ml electrolyte

You require assembly kit (order no. 815079) for the initial installation of the chlorine sensors into the DLG III in-line probe housing.

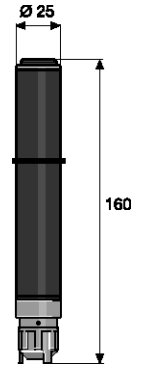

pk_6_041

CGE 2-4P

Measured variable	total available chlorine: sum of organically combined chlorine (e.g. combined in cyanuric acid) and free chlorine
Reference method	DPD1
pH range	5.5 … 9.5
Temperature	5 … 45 °C
Max. pressure	3.0 bar
Intake flow	30…60 l/h (in DGM or DLG III)
Power supply	±7.5 V DC (4 P)
Output signal	4…20 mA ≈ measuring range, temperature-compensated, uncalibrated, not electrically isolated
Typical applications	Swimming pools
Measurement and control equipment	D_4a (metering pump with integrated controller)
In-line probe fitting	DGM, DLG III
Measuring principle	amperometric, 2 electrodes, diaphragm-covered

	Measuring range	Order no.
CGE 2-4P-10 ppm	0.10…10.0 mg/l	792838

Chlorine sensors with 50 ml electrolyte

You require assembly kit (order no. 815079) for the initial installation of the chlorine sensors into the DLG III in-line probe housing.

7.3 DULCOTEST® Amperometric Sensors

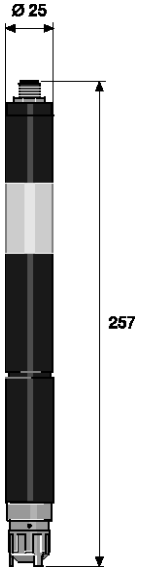

pk_6_084

CGE 2 CAN

Sensor for connection to a CANopen interface (e.g. DULCOMARIN® II swimming pool controller)

Measured variable	organic bound chlorine and free chlorine (e. g. trichlorinated isocyanuric acid)
Reference method	DPD1
pH range	5.5 … 9.5
Temperature	5 … 45 °C
Max. pressure	3.0 bar
Intake flow	30…60 l/h (in DGMa or DLG III)
Supply voltage	Via CAN interface (11 - 30 V)
Output signal	uncalibrated, temperature compensated, electrically isolated
Typical applications	Swimming pools
Measurement and control equipment	D1C, D2C, DULCOMARIN® II
In-line probe fitting	DGM, DLG III
Compatibility	CANopen bus systems
Measuring principle	amperometric, 2 electrodes, diaphragm-covered

	Measuring range	Order no.
CGE 2-CAN-10 ppm	0.01…10.0 mg/l	1024420

Chlorine sensors with 50 ml electrolyte

You require assembly kit (order no. 815079) for the initial installation of the chlorine sensors into the DLG III in-line probe housing.

Measured variable total chlorine

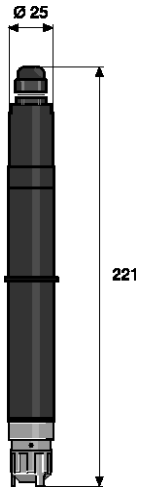

pk_6_040

CTE 1-mA

Measured variable	total chlorine
Reference method	DPD4
pH range	5.5 … 9.5
Temperature	5 … 45 °C
Max. pressure	3.0 bar
Intake flow	30…60 l/h (in DGM or DLG III)
Supply voltage	16…24 V DC (two-wire technology)
Output signal	4…20 mA ≈ measuring range, temperature-compensated, uncalibrated, not electrically isolated
Typical applications	CTE 1-mA-0.5 ppm: Drinking water, cooling water; CTE 1-mA-2/5/10 ppm: drinking water, industrial, process, cooling water in swimming pools in combination with CLE 3.1 to determine combined chlorine
Measurement and control equipment	D1C, D2C, ProMcon
In-line probe fitting	DGM, DLG III
Measuring principle	amperometric, 2 electrodes, diaphragm-covered

	Measuring range	Order no.
CTE 1-mA-0.5 ppm	0.01…0.5 mg/l	740686
CTE 1-mA-2 ppm	0.02…2.0 mg/l	740685
CTE 1-mA-5 ppm	0.05…5.0 mg/l	1003203
CTE 1-mA-10 ppm	0.10…10.0 mg/l	740684

Chlorine sensors with 50 ml electrolyte

An assembly set 815079 is required for DLG III for initial installation of chlorine sensors.

7.3 DULCOTEST® Amperometric Sensors

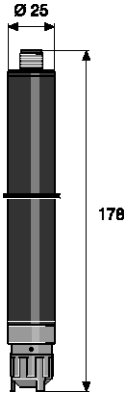

pk_6_015

CTE 1-DMT

Sensors for use with the DMT „chlorine“ measurement transducer.

Measured variable	total chlorine
Reference method	DPD4
pH range	5.5 … 9.5
Temperature	5 … 45 °C
Max. pressure	3.0 bar
Intake flow	30…60 l/h (in DGM or DLG III)
Power supply	3.3 V DC (5 P)
Output signal	uncalibrated, not temperature-compensated, not electrically isolated
Typical applications	CTE 1-mA-0.5 ppm: drinking water, cooling water; CTE 1-mA-2/5/10 ppm: drinking water, industrial, process, cooling water in swimming pools in combination with CLE 3.1 to determine combined chlorine.
Measurement and control equipment	DMT
In-line probe fitting	DGM, DLG III
Measuring principle	amperometric, 2 electrodes, diaphragm-covered

	Measuring range	Order no.
CTE 1-DMT-10 ppm	0.01…10.0 mg/l	1007540

Chlorine sensors with 50 ml electrolyte

An assembly set 815079 is required for DLG III for initial installation of chlorine sensors.

Signal leads see Sensor Accessories, p. → 7-62

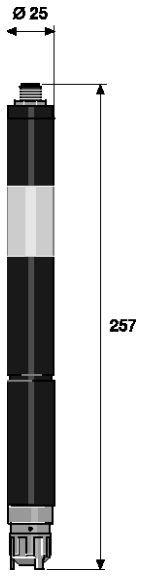

pk_6_084

CTE 1-CAN

Sensor for connection to a CANopen interface (e.g. DULCOMARIN® II swimming pool controller)

Measured variable	total chlorine
Reference method	DPD4
pH range	5.5 … 9.5 (up to pH 8.5 with D1C pH correction)
Temperature	5 … 45 °C
Max. pressure	3.0 bar
Intake flow	30…60 l/h (in DGMa or DLG III)
Supply voltage	Via CAN interface (11 - 30 V)
Output signal	uncalibrated, temperature-compensated, electrically isolated
Typical applications	CTE 1-mA-0.5 ppm: drinking water, cooling water; CTE 1-mA-2/5/10 ppm: drinking water, industrial, process, cooling water in swimming pools in combination with CLE 3.1 to determine combined chlorine.
Measurement and control equipment	DULCOMARIN® II, only for use together with another type CLE 3 sensor to detect bound chlorine
In-line probe fitting	DGM, DLG III
Compatibility	CANopen bus systems
Measuring principle	amperometric, 2 electrodes, diaphragm-covered

	Measuring range	Order no.
CTE 1-CAN-10 ppm	0.01…10.0 mg/l	1023427

Chlorine sensors with 100 ml electrolyte

An assembly set 815079 is required for DLG III for initial installation of chlorine sensors.

7.3 DULCOTEST® Amperometric Sensors

7.3.3 Bromine Sensors

The following bromating agents are used as disinfectants:

Organic bromating agent

- a) DBDMH (1.3-**Di**-**B**rom-5.5-**Di**-**M**ethyl-**H**ydantoin) e. g. sold as Albrom 100®
- b) BCDMH (1-**B**romine-3-**C**hlorine-5.5-**Di**-**M**ethyl-**H**ydantoin) e.g. sold as Brom-Sticks®

These bromating agents are solid and are metered as saturated solutions via brominators.

Inorganic free bromine

Free bromine is produced via the so-called Acti-Brom process® (Nalco) chlorine bleach + acid +sodium bromide.

For measuring DBDMH or free bromine as a bromating agent in the measurement range: 0.2 -10 ppm bromine the BRE 2-mA-10 ppm sensor is recommended along with DPD1-method calibration.

Alternatively, to measure BCDMH in the same measurement range, the BRE 1-mA-10 ppm sensor is recommended along with DPD4-method calibration.

Typical applications are in swimming pools, jacuzzis and cooling systems. Particularly in cooling systems the quality of the sample water must be tested and, where applicable, compatibility with other chemicals employed (e.g. corrosion inhibitors).

Photometric DPD measurement is the recommended method for calibrating the bromine sensor (e.g. with DT 1), calculated and displayed as bromine. If the photometric DPD measurement is used for "chlorine", the measuring value is to be multiplied by the factor 2.25 for conversion into "bromine".

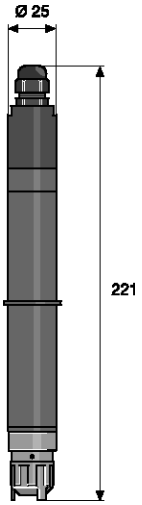

pk_6_074

Measured variable: Total available bromine

Free and bound bromine (as bromamine) and organic bromination agent.

Measured variable	Total available bromine
Bromine chemicals	DBDMH (1.3-dibromine 5.5 dimethyl-hydantoin) BCDMH (1-bromine-3-chlorine-5.5-dimethyl-hydantoin) free bromine (HOBr, OBr^-)
Reference method	DBDMH: free bromine: DPD1 BCDMH: DPD4
pH dependence	if pH changes from pH 7 to pH 8, the sensor sensitivity is reduced a) in the case of DBDMH and free bromine by approx. 10 % b) in the case of BCDMH by approx. 25 %
Temperature	5 … 45 °C
Max. pressure	3.0 bar
Intake flow	30…60 l/h (in DGM or DLG III)
Supply voltage	16…24 V DC (two-wire technology)
Output signal	4…20 mA ≈ measuring range, temperature-compensated, uncalibrated, not electrically isolated
Typical applications	swimming pools/whirlpools and cooling water;can also be used in seawater
Measurement and control equipment	D1C, ProMcon
In-line probe fitting	DGM, DLG III
Measuring principle	amperometric, 2 electrodes, diaphragm-covered

Bromine sensors with 50 ml electrolyte

	Measuring range	Order no.
BRE 1-mA-10 ppm	0.20…10.0 mg/l (BCDMH)	1006895
BRE 1-mA-2 ppm	0.04…2.0 mg/l (BCDMH)	1006894
BRE 1-mA-0,5 ppm	0.01…0.5 mg/l (BCDMH)	1033390
BRE 2-mA-10 ppm	0.20…10.0 mg/l (DBDMH, HOBr)	1020529

Bromine sensors with 50 ml electrolyte

You require assembly kit (order no. 815079) for the initial installation of the bromine sensors into the DLG III in-line probe housing.

Signal leads see Sensor Accessories, p. → 7-62

7.3 DULCOTEST® Amperometric Sensors

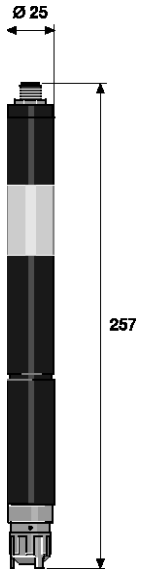

pk_6_084

BRE 3-CAN

Sensor for connection to CAN interface (e.g. swimming pool controller DULCOMARIN® II)

Measured variable	Total available bromine
Bromine chemicals	DBDMH (1.3-dibromine 5.5 dimethyl hydantoin) BCDMH (1-bromine-3-chlorine-5.5-dimethyl hydantoin) free bromine (HOBr, OBr^-)
Reference method	DBDMH, free bromine: DPD1 BCDMH: DPD4
pH dependence	if pH changes from pH 7 to pH 8, the sensor sensitivity is reduced a) in the case of DBDMH and free bromine by approx. 10 % b) in the case of BCDMH by approx. 25 %
Temperature	5 … 45 °C
Max. pressure	3.0 bar
Intake flow	30…60 l/h (in DGM or DLG III)
Supply voltage	Via CAN interface (11 – 30 V)
Output signal	uncalibrated, temperature-compensated, electrically isolated
Typical applications	Swimming pools/whirlpools and cooling water; can also be used in seawater
Measurement and control equipment	DULCOMARIN® II
In-line probe fitting	DGM, DLG III
Measuring principle	amperometric, 2 electrodes, diaphragm-covered

	Measuring range	Order no.
BRE 3-CAN-10 ppm	0.02…10.0 mg/l	1029660

Note: You require an assembly kit (order no. 815079) for the initial installation of the bromine sensors into the in-line probe housing DLG III.

Signal leads see Sensor Accessories, p. → 7-62

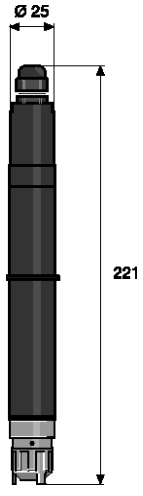

pk_6_040

CBR 1-mA

Measured variable	free chlorine (hypochlorous acid HOCl, OCl^-), free bromine, bound bromine
Reference method	DPD1
pH range	5.0 … 9.5
Temperature	5 … 45 °C
Max. pressure	1.0 bar
Intake flow	30…60 l/h (in DGM, DLG II)
Power supply	16...24 V DC (2-wire)
Output signal	4…20 mA = Measuring range, temperature-compensated, uncalibrated, not electrically isolated
Typical applications	Cooling water, Process water, Waste water, Water with higher pH values (stable pH)
Measurement and control equipment	D1C, ProMcon
In-line probe fitting	DGM, DLG III
Measuring principle	amperometric, 2 electrodes, diaphragm-covered

	Measuring range	Order no.
CBR 1-mA-0,5 ppm	0.01…0.5 mg/l…*	1038016
CBR 1-mA-2 ppm	0.02…2.0 mg/l…*	1038015
CBR 1-mA-10 ppm	0.10…10.0 mg/l…*	1038014

* Measuring range based on chlorine. The upper and lower limits of the measuring range are increased by a factor of 2.25 when measuring bromine, e.g. CBR 1-mA-0.5 ppm: 0.0225 ... 1.125 ppm.

Available from 1st quarter of 2011.

7.3 DULCOTEST® Amperometric Sensors

7.3.4 Chlorine Dioxide Sensors

Sensor type		CDE 2-mA	CDE 3-mA	CDP 1-mA	CDR 1-mA
Application		Drinking water	Hot water circuits	Bottle washer system	Cooling water, waste water, Agriculture
Measurement range		0.01-10.0	0.01-0.50	0.02-2.00	0.01-10.0
Temperature	°C	5 … 45	5 … 60	10 … 45	1 … 55
Temperature compensation		internal	internal	external	internal
Max. pressure	bar	1.0	1.0	3.0	3.0
pH range		4.0 … 11.0	4.0 … 11.0	5.5 … 10.5	1.0 … 10.0
Response time	s	120	120	60	180
Run-in time	h	2-6	2-6	4-12	2-6
Surfactant-resistance		no	no	yes	yes
Contamination resistance		no	no	under certain conditions	yes
Cross sensibility		Ozone, compared with chlorine < 2 %	Ozone, compared with chlorine < 2 %	Ozone, chlorine	Ozone

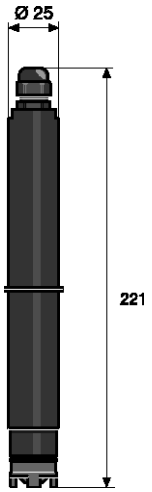

pk_6_039

CDE 2-mA

Measured variable	Chlorine dioxide (ClO_2)
Reference method	DPD1
pH range	4.0 … 11.0 ClO_2 stability range
Cross sensibility	Ozone, compared with chlorine < 2 %
Temperature	5 … 45 °C
Max. pressure	1.0 bar
Intake flow	30…60 l/h (in DGM or DLG III)
Supply voltage	16…24 V DC (two-wire technology)
Output signal	4…20 mA ≈ measuring range, temperature-compensated, uncalibrated, not electrically isolated
Typical applications	uncontaminated drinking water (surfactant-free)
Measurement and control equipment	D1C
In-line probe fitting	DGM, DLG III
Measuring principle	amperometric, 2 electrodes, diaphragm-covered

	Measuring range	Order no.
CDE 2-mA-0.5 ppm	0.01…0.5 mg/l	792930
CDE 2-mA-2 ppm	0.02…2.0 mg/l	792929
CDE 2-mA-10 ppm	0.10…10.0 mg/l	792928

Chlorine dioxide sensors with 100 ml electrolyte

Note: A mounting kit (Order No. 815079) is required for the initial installation of the chlorine sensor in the DLG III in-line probe housing.

7.3 DULCOTEST® Amperometric Sensors

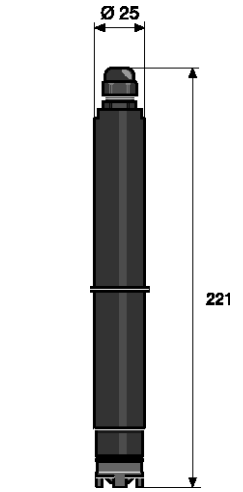

pk_6_039

CDE 3-mA

Measured variable	Chlorine dioxide (ClO_2)
Reference method	DPD1
pH range	4.0 … 11.0 ClO_2 stability range
Cross sensibility	Ozone, compared with chlorine < 2 %
Temperature	5 … 60 °C
Max. pressure	1.0 bar
Intake flow	30…60 l/h (in DGM or DLG III)
Supply voltage	16…24 V DC (two-wire technology)
Output signal	4…20 mA ≈ measuring range, temperature-compensated, uncalibrated, not electrically isolated
Typical applications	chlorine dioxide treatment of uncontaminated warm water to combat legionellae
Measurement and control equipment	D1C
In-line probe fitting	DGM, DLG III
Measuring principle	amperometric, 2 electrodes, diaphragm-covered

	Measuring range	Order no.
CDE 3-mA-0.5 ppm	0.01…0.5 mg/l	1026154

Chlorine dioxide sensors complete with electrolyte, 100 ml.

Note: A mounting kit (Order No. 815079) is required for the initial installation of the chlorine sensor in the DLG III in-line probe housing.

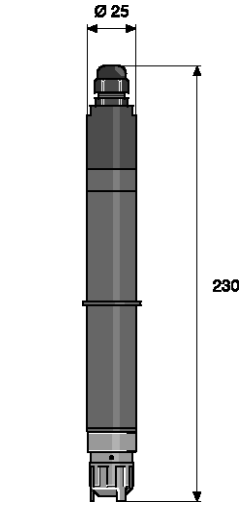

pk_6_047

CDP 1-mA

Measured variable	Chlorine dioxide (ClO_2)
Reference method	DPD1
pH range	5.5 … 10.5
Temperature	10 … 45 °C (short-term periods 55 °C) with external temperature correction via Pt 100 (no internal temperature correction!)
Max. pressure	3.0 bar no surges
Intake flow	30…60 l/h
Supply voltage	16…24 V DC (two-wire technology)
Output signal	4…20 mA ≈ measuring range, not temperature-compensated, uncalibrated, not electrically isolated
Typical applications	Process water containing surfactants (bottle washing machines)
Measurement and control equipment	only D1C with automatic temperature correction
In-line probe fitting	it is recommended to install the sensor in the in-line probe fitting DLG II with upstream flow monitoring together with a Pt 100 temperature sensor
Measuring principle	amperometric, 2 electrodes, diaphragm-covered

	Measuring range	Order no.
CDP 1-mA-2 ppm	0.02…2.0 mg/l	1002149

Chlorine dioxide sensors with 100 ml electrolyte

Note: A mounting kit (Order No. 815079) is required for the initial installation of the chlorine sensor in the DLG III in-line probe housing.

7.3 DULCOTEST® Amperometric Sensors

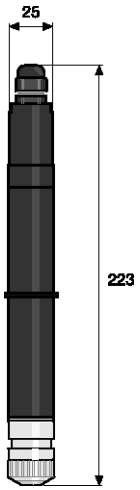

pk_6_083

CDR 1-mA

Measured variable	Chlorine dioxide (ClO_2)
Reference method	DPD1
pH range	1.0 … 10.0
Temperature	1 … 55 °C (short-term period 60 °C)
Max. pressure	3.0 bar (30 °C, in DGMA)
Response time sensor	t_{90}~ 3 min.
Intake flow	30…60 l/h (in DGM or DLG III)
Supply voltage	16…24 V DC
Output signal	4…20 mA temperature-compensated, uncalibrated, not electrically isolated
Typical applications	contaminated industrial, process water, containing surfactants, cooling water, irrigation water,slightly contaminated waste water, warm water
Measurement and control equipment	D1C
In-line probe fitting	DGMa / DLGIII
Measuring principle	amperometric, 2 electrodes, diaphragm-covered

	Measuring range	Order no.
CDR 1-mA-0.5 ppm	0.01…0.5 mg/l	1033762
CDR 1-mA-2 ppm	0.02…2.0 mg/l	1033393
CDR 1-mA-10 ppm	0.10…10.0 mg/l	1033404

Note: A mounting kit (Order No. 815079) is required for the initial installation of the chlorine sensor in the DLG III in-line probe housing.

7.3 DULCOTEST® Amperometric Sensors

7.3.5 Chlorite Sensors

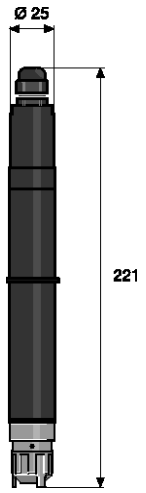

pk_6_040

DVGW recommended

CLT 1-mA

Measured variable	Chlorite anion (ClO_2^-)
Reference method	DPD method Chlorite in presence of chlorine dioxide
pH range	6.5 … 9.5
Temperature	1 … 40 °C
Max. pressure	1.0 bar
Intake flow	30…60 l/h (in DGM or DLG III)
Supply voltage	16…24 V DC (two-wire technology)
Output signal	4…20 mA ≈ measuring range, temperature-compensated, uncalibrated, not electrically isolated
Typical applications	Monitoring of drinking water or similar waters treated with chlorine dioxide. Selective measurement of chlorite and chlorine dioxide, chlorine and chlorate is also possible.
Measurement and control equipment	D1C
In-line probe fitting	DGM, DLG III
Measuring principle	amperometric, 2 electrodes, diaphragm-covered

	Measuring range	Order no.
CLT 1-mA-0.5 ppm	0.02…0.50 mg/l	1021596
CLT 1-mA-2 ppm	0.10…2.00 mg/l	1021595

Chlorite sensors complete with electrolyte, 50 ml.

Note: You require assembly kit (order no. 815079) for the initial installation of the chlorite sensors into the DLG III in-line sensor housing.

We recommend the DT4 photometer for calibration of the chlorite sensor.

Panel-mounted measuring station

The panel-mounted measuring stations that could be ordered to date with part no. 1023062 (230 V) can now be ordered as measuring stations of the DULCOTROL® product range PWCA.

PWCA I000_1_9_A_0_0_0_0_x (230 V)_1

7.3.6 Ozone Sensors

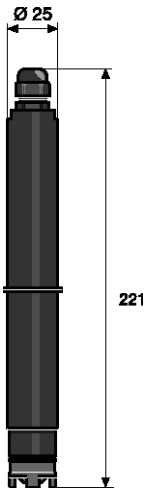

pk_6_039

OZE 3-mA

Measured variable	Ozone (O_3)
Reference method	DPD4
pH range	Ozone stability range
Temperature	5 … 40 °C
Max. pressure	1.0 bar
Intake flow	30…60 l/h (in DGM or DLG III)
Supply voltage	16…24 V DC (two-wire technology)
Output signal	4…20 mA ≈ measuring range, temperature-compensated, uncalibrated, not electrically isolated
Typical applications	Swimming pool, drinking water, industrial, process water (surfactant-free)
Measurement and control equipment	D1C, ProMcon
In-line probe fitting	DGM, DLG III
Measuring principle	amperometric, 2 electrodes, diaphragm-covered

	Measuring range	Order no.
OZE 3-mA-2 ppm	0.02…2.00 mg/l	792957

Ozone sensor complete with electrolyte, 100 ml.

You require assembly kit order no. 815079 for the initial installation of the ozone sensors into the DLG III in-line probe housing.

7.3 DULCOTEST® Amperometric Sensors

7.3.7 Sensors For Dissolved Oxygen

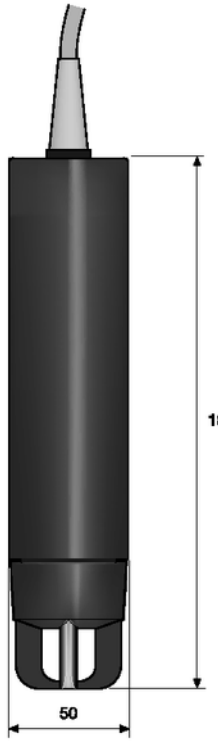

pk_6_050_1

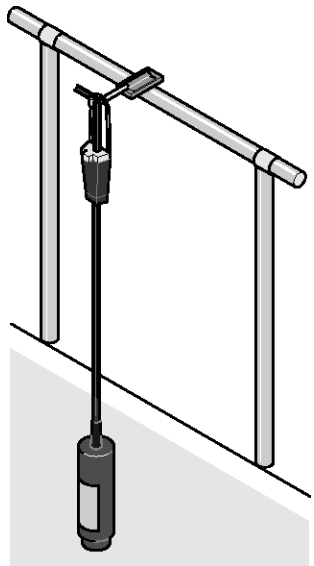

pk_6_011

The measured variable “dissolved oxygen” gives the quantity of the gaseous physical dissolved oxygen in its aqueous phase in mg/l (ppm).

The “dissolved oxygen” is thereby an important parameter for controlling the quality of surface water and water which needs to be oxygenated for use in aqua culture and aqua zoos. The dissolved oxygen is also used to control processes in sewage plants and waterworks.

The following sensors are assigned to the different applications and can be supplied separately as 4-20 mA-transmitters to central controllers or together with the D1C as a stand alone solution (measured variable: “dissolved oxygen”: X).

DO 1-mA

Measured variable	Dissolved oxygen
Calibration	of oxygen in air
Measurement accuracy	±0,5 % referred to final value of measuring range
Temperature	0 … 50 °C
Max. pressure	1.0 bar
Intake flow	minimum: 0.05 m/s
Enclosure rating	IP 68
Supply voltage	12…30 V DC
Electrical connection	Fixed lead, 10 m
Output signal	4…20 mA ≈ measuring range, calibrated, temperature-compensated, and electrically isolated
Process integration	a) Immersion, suspended on cable with or without cable bracket (see accessories) b) Immersion with immersion pipe 1. Immersion pipe with 50 mm outside diameter and 1-1/4 inch internal thread (provided by the customer). The connection is possible via immersion pipe adapter (see accessories). 2. PVC immersion pipe with 50 mm outside diameter (provided by the customer). The connection is made by adhesion via standard PVC union (provided by the customer). c) In-flow operation on request
Typical applications	fish and shrimp farming, conditioning of waters of large aquaria in zoological parks, control of the oxygen input in waterworks, appraisal of the biological status of surface waters.
Measuring principle	amperometric, 2 electrodes, diaphragm-covered

	Measuring range	Order no.
DO 1-mA-20 ppm	2.00…20.0 mg/l	1020532

for further informations: Measured Variables Chlorine, Chlorine Dioxide, Chlorite, Bromine, Ozone, Dissolved Oxygen, Single-Channel Controller, Type D1Ca see page → 8-15; Immersion Probe Fittings/Adaptors see page → 7-75

7.3 DULCOTEST® Amperometric Sensors

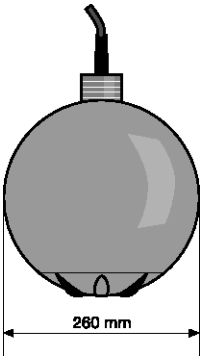

pk_6_051

DO 2-mA

Measured variable	Dissolved oxygen
Calibration	of oxygen in air
Measurement accuracy	±0,5 % referred to final value of measuring range
Temperature	0 … 50 °C
Max. pressure	1.0 bar
Intake flow	minimum: 0.05 m/s
Enclosure rating	IP 68
Supply voltage	12…30 V DC
Electrical connection	Fixed lead, 10 m
Output signal	4…20 mA Measuring range calibrated, temperature-corrected, and electrically isolated
Process integration	as float with venturi grooves to increase the flow of sample water for the self-cleaning of the sensor part. Supplied with adapter for connection to PVC-pipes with outside diameter: 50 mm and railing bracket, also for PVC pipes with outside diameter: 50 mm (see accessories). The customer must provide the straight PVC tube and a 45 ° standard elbow for gluing to PVC pipes (outside diameter 50 mm).
Typical applications	Control of the oxygen input in activated sludge pools (sewage plant) for the purpose of energy conservation.
Measuring principle	amperometric, 2 electrodes, diaphragm-covered

	Measuring range	Order no.
DO 2-mA-10 ppm	0.10…10.0 mg/l	1020533

for further informations: Immersion Probe Fittings/Adaptors see page → 7-75

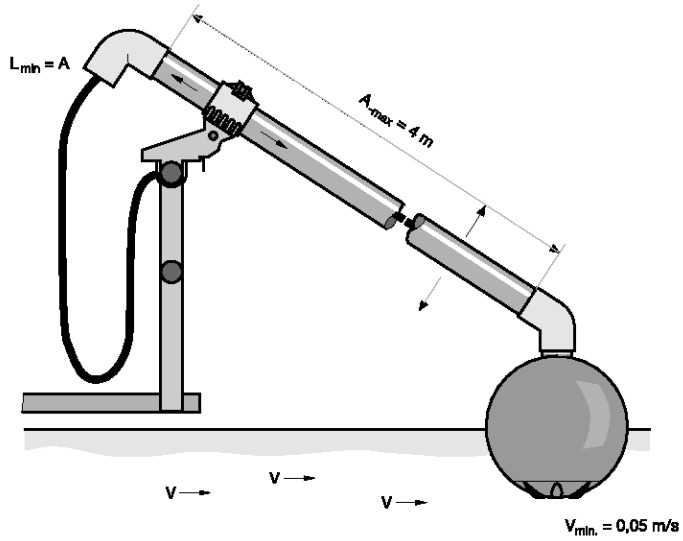

pk_6_012

7.3 DULCOTEST® Amperometric Sensors

7.3.8 Sensor For Peracetic Acid

The DULCOTEST® PAA 1 sensors are membrane-covered amperometric 2-electrode sensors for the selective measurement of peracetic acid. Peracetic acid is used as a disinfectant particularly in the food and beverage industries as well as in the cosmetic, pharmaceutical and medical industries. The continuous measurement and control of the peracetic acid is essential to comply with demanding disinfection requirements and for quality control. Unlike with the sensors in the earlier Perox PES system the PAA 1-mA can be used with the D1Ca controller. Commissioning and maintenance is greatly simplified. The sensors can even be used in the presence of surfactants (tensides).

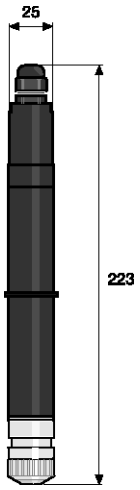

pk_6_083

PAA 1-mA

Measured variable	Peracetic acid
Reference method	titration
pH range	1.0 … 9.0 (peracetic acid stability range)
Temperature	1 … 45 °C
Admissible temperature fluctuation	0.3 °C/min
Response time sensor	$t_{90} \approx 3$ min
Max. pressure	3.0 bar (30 °C, in DGM)
Intake flow	30…60 l/h (in in-line probe housing DGM or DLG III)
Supply voltage	16…24 V DC (two-wire technology)
Output signal	4…20 mA ≈ measuring range, temperature-compensated, uncalibrated, not electrically isolated
Typical applications	Scouring in Cleaning in Place (CIP), rinser, also suitable in the presence of cationic and anionic tensides. The selective measurement of peracetic acid and hydrogen peroxide is possible.
Measurement and control equipment	D1C
In-line probe fitting	DGM, DLG
Measuring principle	amperometric, 2 electrodes, diaphragm-covered

	Measuring range	Order no.
PAA 1-mA-200 ppm	1…200 mg/l	1022506
PAA 1-mA-2000 ppm	10…2,000 mg/l	1022507

Note: A mounting kit (Order No. 815079) is required for the initial installation of the sensor in the DLG III in-line probe housing.

7.3 DULCOTEST® Amperometric Sensors

7.3.9 Sensor for hydrogen peroxide

The DULCOTEST® PEROX and PER1 sensors are membrane-covered amperometric sensors for online determination of hydrogen peroxide concentration. Because it is totally biologically degradable, hydrogen peroxide is frequently used as a disinfectant and oxidant in water treatment and production:

- Chemical bleaching in the timber, paper, textile and mineral salt industries
- Organic synthesis in the chemical, pharmaceutical and cosmetics industries
- Oxidation of drinking water, landfill seepage water, contaminated ground water
- Disinfection of cooling water, service water and production water in the pharmaceutical and food and beverages industries, and in swimming pools
- Deodorisation (gas scrubber) in municipal and industrial wastewater purification plants
- Dechlorination in chemical processes

The sensors are selected using the following decision table:

Requirement	Type	
	PER1	PEROX
Sensor matrix contaminated by dirt and chemicals	Suitable due to impermeable diaphragm *	More susceptible due to impermeable diaphragm
Electrical interference due to interference potentials in the sample medium	Immune as counter electrode is separated from process	More susceptible as counter electrode is in the medium
Temperature range	Up to 50 °C	Up to 40 °C
Ease of handling during installation and maintenance	Suitable because temperature compensation and measuring transducer are integrated in the sensor	Separate temperature sensor and measuring transducer
Response time for H_2O_2 for fast controlling	Inert T_{90}= 6-8 min	Fast: T_{90}= 20 s
Fast temperature changes	Inert because of integrated temperature sensor	Fast because of separate temperature sensor
Measuring intervals in the absence of H_2O_2	unsuitable	Suitable because of pulsed polarisation technology
Measuring range can vary from time to time because of size arrangements or is not clear at time of ordering	Selection of a suitable sensor necessary	Suitable because measuring range can be selected manually at the sensor transducer

* susceptible to interference with regard to hydrogen sulphide (H_2S)

PER1

Measured variable	hydrogen peroxide
Calibration	photometrically with hand-held photometer DT3, see Chap. 5.4.4
pH range	2.5 … 11.0
Temperature	0 … 50 °C
Admissible temperature fluctuation	< 0.3 °C/min
Response time sensor	T_{90} approx. 480 sec
Measurement accuracy	≥ 1 ppm or better than ± 5 % of measured value
Min. conductivity	0.05 … 5.00 mS/cm
Max. pressure	1.0 bar
Intake flow	20…100 l/h
Supply voltage	16…24 V DC (two-wire system)
Output signal	4…20 mA temperature-compensated, uncalibrated, not electrically isolated
Typical applications	swimming pool,treatment of contaminated waste waters,treatment of process media from production
Measurement and control equipment	D1Ca … H7, ProMcon
In-line probe fitting	DGM, DLG
Measuring principle	amperometric, 2 electrodes, diaphragm-covered

	Measuring range	Order no.
PER 1-mA-50 ppm	0.50…50.0 mg/l	1030511
PER 1-mA-200 ppm	2.00…200.0 mg/l	1022509
PER 1-mA-2000 ppm	20.00…2,000.0 mg/l	1022510

		Order no.
Photometer DT3	(for calibration)	1023143

Note: A mounting kit (Order No. 815079) is required for the initial installation of the sensor in the DLG III in-line probe housing.

7.3 DULCOTEST® Amperometric Sensors

PEROX

Measured variable	hydrogen peroxide
Calibration	photometrically with hand-held photometer DT3, see Chap. 5.4.4
Measurement range	1… 20/10 … 200/100 … 2,000 mg/l switchable
pH range	2.5 … 10.0
Temperature	0 … 40 °C
Admissible temperature fluctuation	< 1 °K/min (for external temp. measurement) see operating instructions
Response time sensor	T_{90} approx. 20 sec
Measurement accuracy	better than 2 % referred to range full scale value
Min. conductivity	with 20 mg/l range: 5 µS/cm with 200 mg/l range: 200 µS/cm up to 1,000 mg/l: 500 µS/cm up to 2,000 mg/l: 1 mS/cm
Max. pressure	2.0 bar
Intake flow	30…60 l/h
Supply voltage	16…24 V DC (3-wire system)
Output signal	4…20 mA not temperature-compensated, uncalibrated, not electrically isolated
Typical applications	treatment of clear and chemically uncontaminated waters, Controls with necessary short response times
Measurement and control equipment	D1Ca … H1
In-line probe fitting	DGM, DLG
Measuring principle	amperometric, 2 electrodes, diaphragm-covered

	Order no.
Perox sensor PEROX-H2.10-P	792976
Perox transducer V1	741129

		Order no.
Photometer DT3	(for calibration)	1023143

7.4 DULCOTEST® Conductivity Sensors

7.4.1 Conductivity Sensors

For optimised functioning of conductivity sensors, please note the following guidelines:

- The sensors should be installed with the electrode totally immersed in the sample fluid
- The signal leads should be kept as short as possible
- Temperature compensation is necessary when subject to fluctuating temperatures
- Clean electrodes regularly depending on application
- Cell constant and measurement range must correspond

Summary of features:

- Simple to install
- Reliable measuring
- Simple to maintain

Selection guide - DULCOTEST® Conductivity sensors

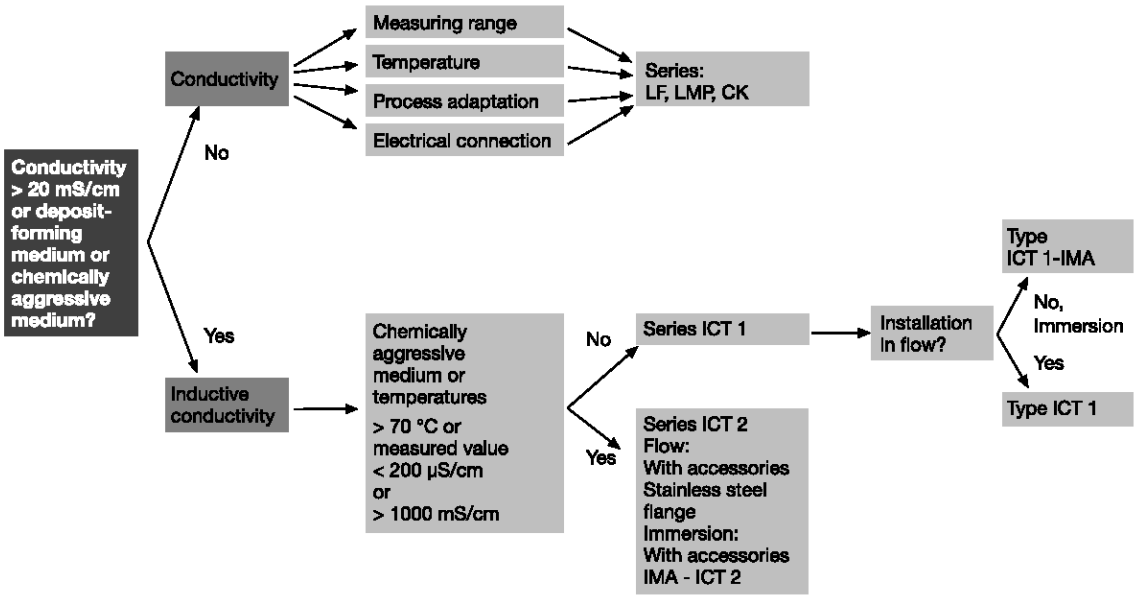

Overview table, conductivity sensors

Type	Measurement range	Cell constant k cm^{-1}	Medium temperature max. °C	Max. pressure bar	Shaft material	Temperature compensation	Process integration	Electrical connection
LMP 001 → 7-50	0.01…50 µS/cm	0.01 ±5 %	70	16	PP	Pt 100	Flow, 3/4" outer thread	DIN 4 pin angle plug
LMP 001-HT → 7-50	0.01…50 µS/cm	0.01 ±5 %	120	16	PVDF	Pt 100	Flow, 3/4" outer thread	DIN 4 pin angle plug
LMP 01 → 7-51	0.10…500 µS/cm	0.10 ±5 %	70	16	PP	Pt 100	Flow, 3/4" outer thread	DIN 4 pin angle plug
LMP 01-HT → 7-52	0.10…500 µS/cm	0.10 ±5 %	120	16	PVDF	Pt 100	Flow, 3/4" outer thread	DIN 4 pin angle plug
LMP 01-TA → 7-51	0.10…500 µS/cm	0.10 ±5 %	70	16	PP	Pt 100	Immersion, including immersible in-line probe fitting, 1 m + 5 m cable	5 m fixed cable
LF 1 FE → 7-52	0.01…20 mS/cm	1.00 ±5 %	80	16	Epoxy	–	PG 13.5, flow (length: 120 mm) or immersion	5 m fixed cable (2 x 0.5 mm^2)

7.4 DULCOTEST® Conductivity Sensors

Type	Measurement range	Cell constant k cm^{-1}	Medium temperature max. °C	Max. pressure bar	Shaft material	Temperature compensation	Process integration	Electrical connection
LFT 1FE → 7-52	0.01…20 mS/cm	1.00 ±5 %	80	16	Epoxy	Pt 100	PG 13.5, flow (length: 120 mm) or immersion	5 m fixed cable (2 x 0.5 mm^2)
LFTK 1 FE → 7-53	0.01…20 mS/cm	1.00 ±5 %	80	16	Epoxy	Pt 1000	PG 13.5, flow (length: 120 mm) or immersion	5 m fixed cable (2 x 0.5 mm^2)
LF 1 DE → 7-53	0.01…20 mS/cm	1.00 ±5 %	80	16	Epoxy	–	PG 13.5, flow (length: 120 mm) or immersion	DIN 4 pin angle plug
LFT 1 DE → 7-53	0.01…20 mS/cm	1.00 ±5 %	80	16	Epoxy	Pt 100	PG 13.5, flow (length: 120 mm) or immersion	DIN 4 pin angle plug
LFTK 1 DE → 7-54	0.01…20 mS/cm	1.00 ±5 %	80	16	Epoxy	Pt 1000	PG 13.5, flow (length: 120 mm) or immersion	DIN 4 pin angle plug
LF 1 1/2" → 7-54	0.01…20 mS/cm	1.00 ±5 %	80	16	Epoxy	–	1/2 inch male thread, flow (length: 120 mm) or immersion	DIN 4 pin angle plug
LFT 1 1/2" → 7-54	0.01…20 mS/cm	1.00 ±5 %	80	16	Epoxy	Pt 100	1/2 inch male thread, flow (length: 120 mm) or immersion	DIN 4 pin angle plug
LFTK 1 1/2" → 7-55	0.01…20 mS/cm	1.00 ±5 %	80	16	Epoxy	Pt 1000	1/2 inch male thread, flow (length: 120 mm) or immersion	DIN 4 pin angle plug
CK 1 → 7-55	0.01…20 mS/cm	1.00 ±5 %	150	16	PES	–	Flow, 1” outer thread	DIN 4 pin angle plug
CKPt 1 → 7-55	0.01…20 mS/cm	1.00 ±5 %	150	16	PES	Pt 100	Flow, 1” outer thread	DIN 4 pin angle plug
LM 1 → 7-56	0.1…20 mS/cm	1.00 ±5 %	70	16	PP	–	Flow, 3/4” outer thread	DIN 4 pin angle plug
LM 1-TA → 7-56	0.1…20 mS/cm	1.00 ±5 %	70	16	PP	–	Immersion, including immersible in-line probe fitting, 1 m + 5 m cable	5 m fixed cable
LMP 1 → 7-56	0.1…20 mS/cm	1.00 ±5 %	70	16	PP	Pt 100	Flow, 3/4” outer thread	DIN 4 pin angle plug
LMP 1-HT → 7-57	0.1…20 mS/cm	1.00 ±5 %	120	16	PVDF	Pt 100	Flow, 3/4” outer thread	DIN 4 pin angle plug
LMP 1-TA → 7-57	0.1…20 mS/cm	1.00 ±5 %	70	16	PP	Pt 100	Immersion, including immersible in-line probe fitting 1 m + 5 m cable	5 m fixed cable
LF 204 → 8-82	1 µS/cm…500 mS/cm	0.47 ±1.5 %	–	2	–	–	Manual immersion	–
ICT 1 → 7-58	0.2…1000 mS/cm	8.50 ±5 %	70	8	PP	Pt 100	Flow DN 50	7 m fixed cable
ICT 1-IMA → 7-59	0.2…1000 mS/cm	8.50 ±5 %	70	8	PP	Pt 100	Immersion including in-line probe fitting 1 m	7 m fixed cable
ICT 2 → 7-59	0.02…2000 mS/cm	1.98	125	16	PFA	Pt 100, class A, completely extrusion-coated	Installation with SS flange, immersion with immersion pipe fixed cable (Accessories)	5 m fixed cable

General information:

1 We offer the DMT transducer to convert the measuring signal into a temperature-compensated 4-20 mA signal (see Chap. 8).

2 Connection configuration for DIN 4P angle plug:
- Electrodes: earth and 2
- Pt 100/1000: 1 and 3

3 A PG 13.5 / 1" adapter set (order no. 1002190) is required when installing into in-line probe housing DLG III (1" aperture).

7.4 DULCOTEST® Conductivity Sensors

7.4.2 2-Electrode Conductivity Sensors

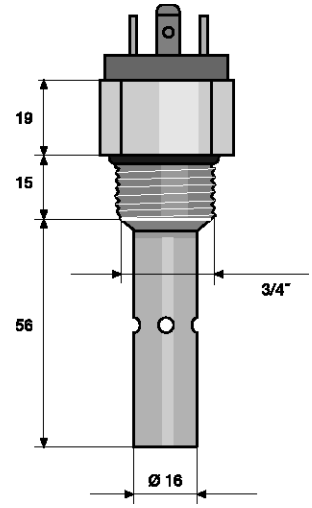

pk_6_048

LMP 001

Conductivity sensor with Pt 100 temperature compensation and 0.01 cm-1 cell constant

Measurement range	0.01…50 µS/cm
Cell constant k	0.01 cm^{-1} ±5 %
Temperature compensation	Pt 100
Fluid temperature	70 °C
Max. pressure	16.0 bar up to 50 °C
Electrode material	stainless steel 1.4571
Shaft material	PP
Thread	3/4"
Installation length	71 mm
Electrical connection	DIN 4 pin angle plug
Typical applications	Clean water applications, monitoring ion exchangers and reverse osmosis systems

	Order no.
LMP 001	1020508

Please observe the general notes on p. → 7-48 (Overview table, conductivity sensors)

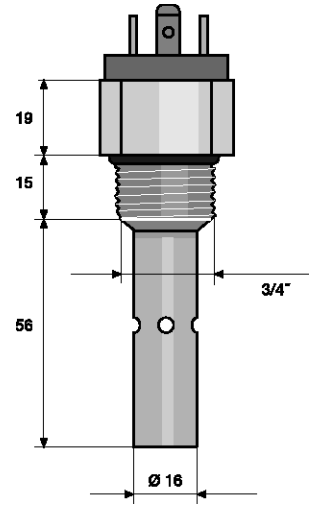

pk_6_048

LMP 001-HT

Conductivity sensor with Pt 100 temperature compensation and 0.01 cm^{-1} cell constant for higher temperatures

Measurement range	0.01…50 µS/cm
Cell constant k	0.01 cm^{-1} ±5 %
Temperature compensation	Pt 100
Fluid temperature	120 °C
Max. pressure	16.0 bar up to 100 °C
Electrode material	stainless steel 1.4571
Shaft material	PVDF
Thread	3/4"
Installation length	71 mm
Electrical connection	DIN 4 pin angle plug
Typical applications	General applications at higher temperatures, clean water applications, condensate.

	Order no.
LMP 001-HT	1020509

Please observe the general notes on p. → 7-48 (Overview table, conductivity sensors)

7.4 DULCOTEST® Conductivity Sensors

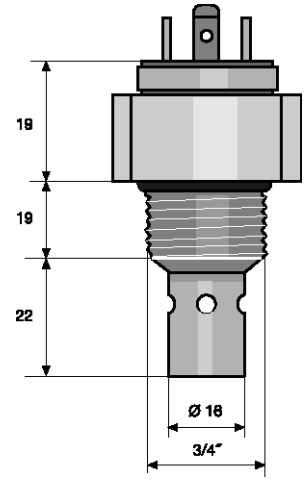

pk_6_049

LMP 01

Conductivity sensor with Pt 100 temperature compensation and 0.1 cm^{-1} cell constant. LMP 01 is fitted with a 4 pin plug and a 3/4 inch male thread.

Measurement range	0.1…500 µS/cm
Cell constant k	0.1 cm^{-1} ±5 %
Temperature compensation	Pt 100
Fluid temperature	70 °C
Max. pressure	16.0 bar up to 50 °C
Electrode material	stainless steel 1.4571
Shaft material	PP
Thread	3/4″
Installation length	46 mm
Electrical connection	DIN 4 pin angle plug
Typical applications	Monitoring ion exchangers, reverse osmosis systems and desalination systems.

	Order no.
LMP 01	1020510

Please observe the general notes on p. → 7-48 (Overview table, conductivity sensors)

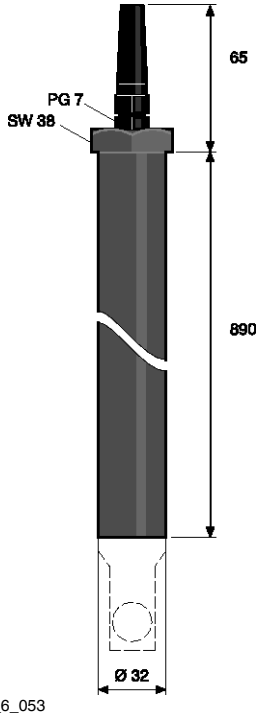

pk_6_053

LMP 01-TA

Conductivity sensor with Pt 100 temperature compensation and 0.1 cm^{-1} cell constant. LMP 01-TA is fitted with 5 m fixed cable and integrated into the immersion assembly TA-LM via a M 28 thread (see Chap. 6.5).

Measurement range	0.1…500 µS/cm
Cell constant k	0.1 cm^{-1} ±5 %
Temperature compensation	Pt 100
Fluid temperature	70 °C
Max. pressure	16.0 bar up to 50 °C
Electrode material	stainless steel 1.4571
Shaft material	PP
Thread	M 28 x 1.5 for immersion assembly TA-LM
Installation length	
Electrical connection	5 m fixed cable
Typical applications	Monitoring ion exchangers, reverse osmosis systems and desalination systems.

		Order no.
LMP 01-TA	–	1020512
LMP 01-FE	spare sensor for LMP 01-TA with 5 m fixed cable	1020626

Please observe the general notes on p. → 7-48 (Overview table, conductivity sensors)

7.4 DULCOTEST® Conductivity Sensors

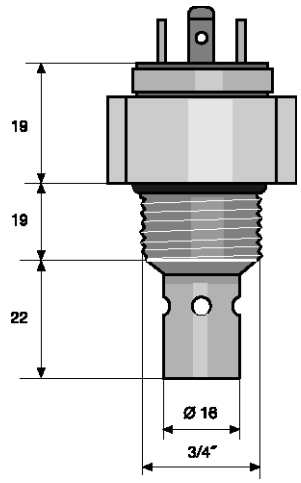

pk_6_049

LMP 01-HT

Conductivity sensor with Pt 100 temperature compensation and 0.1 cm^{-1} cell constant for higher temperatures

Measurement range	0.1…500 µS/cm
Cell constant k	0.1 cm^{-1} ±5 %
Temperature compensation	Pt 100
Fluid temperature	120 °C
Max. pressure	16.0 bar up to 100 °C
Electrode material	stainless steel 1.4571
Shaft material	PVDF
Thread	3/4"
Installation length	46 mm
Electrical connection	DIN 4 pin angle plug
Typical applications	General applications at higher temperatures: industrial, process water, condensate

	Order no.
LMP 01-HT	1020511

Please observe the general notes on p. → 7-48 (Overview table, conductivity sensors)

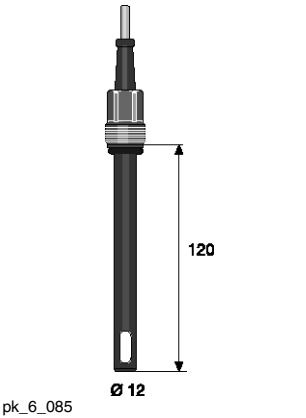

pk_6_085

LF 1 FE

Measurement range	0.01…20 mS/cm
Cell constant k	1 cm^{-1} ±5 %
Temperature compensation	–
Fluid temperature	0…80 °C
Max. pressure	16.0 bar
Electrode material	special graphite
Shaft material	Epoxy
Thread	PG 13.5
Installation length	120 ± 3 mm
Electrical connection	5 m fixed cable (2 x 0.5 mm^2)
Typical applications	Drinking, cooling, industrial water.The sensors in the LF series are not wholly suitable for the measurement of cleaning solutions containing surfactants or liquids containing solvents.

	Order no.
LF 1 FE	741152

Please observe the general notes on p. → 7-48 (Overview table, conductivity sensors)

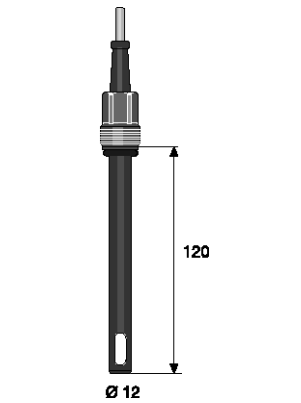

pk_6_085

LFT 1FE

Measurement range	0.01…20 mS/cm
Cell constant k	1 cm^{-1} ±5 %
Temperature compensation	Pt 100
Fluid temperature	0…80 °C
Max. pressure	16.0 bar
Electrode material	special graphite
Shaft material	Epoxy
Thread	PG 13.5
Installation length	120 ± 3 mm
Electrical connection	5 m fixed cable (2 x 0.5 mm^2)
Typical applications	Drinking, cooling, industrial water.The sensors in the LF… series are not wholly suitable for taking measurements in cleaning solutions containing surfactants or liquids containing solvents

	Order no.
LFT 1 FE	1001374

Please observe the general notes on p. → 7-48 (Overview table, conductivity sensors)

7.4 DULCOTEST® Conductivity Sensors

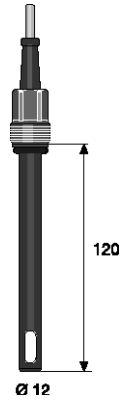

pk_6_085

LFTK 1 FE

Measurement range	0.01…20 mS/cm
Cell constant k	1 cm^{-1} ±5 %
Temperature compensation	Pt 1000
Fluid temperature	0…80 °C
Max. pressure	16.0 bar
Electrode material	special graphite
Shaft material	Epoxy
Thread	PG 13.5
Installation length	120 ± 3 mm
Electrical connection	5 m fixed cable (2 x 0.5 mm^2)
Typical applications	Potable, cooling, industrial water. The sensors in the LF… series are not wholly suitable for taking measurements in cleaning solutions containing surfactants or liquids containing solvents

	Order no.
LFTK 1 FE	1002821

Please observe the general notes on p. → 7-48 (Overview table, conductivity sensors)

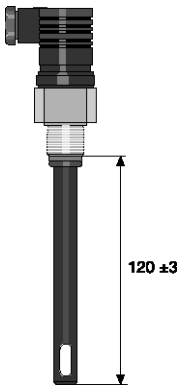

pk_6_086

LF 1 DE

Measurement range	0.01…20 mS/cm
Cell constant k	1 cm^{-1} ±5 %
Temperature compensation	–
Fluid temperature	0…80 °C
Max. pressure	16.0 bar
Electrode material	special graphite
Shaft material	Epoxy
Thread	PG 13.5
Installation length	120 ± 3 mm
Electrical connection	DIN 4 pin angle plug
Typical applications	Drinking, cooling, industrial water.The sensors in the LF… series are not wholly suitable for taking measurements in cleaning solutions containing surfactants or liquids containing solvents.

	Order no.
LF 1 DE	1001375

Please observe the general notes on p. → 7-48 (Overview table, conductivity sensors)

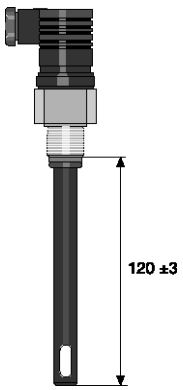

pk_6_086

LFT 1 DE

Measurement range	0.01…20 mS/cm
Cell constant k	1 cm^{-1} ±5 %
Temperature compensation	Pt 100
Fluid temperature	0…80 °C
Max. pressure	16.0 bar
Electrode material	special graphite
Shaft material	Epoxy
Thread	PG 13.5
Installation length	120 ± 3 mm
Electrical connection	DIN 4 pin angle plug
Typical applications	Drinking, cooling, industrial water.The sensors in the LF… series are not wholly suitable for taking measurements in cleaning solutions containing surfactants or liquids containing solvents.

	Order no.
LFT 1 DE	1001376

Please observe the general notes on p. → 7-48 (Overview table, conductivity sensors)

7.4 DULCOTEST® Conductivity Sensors

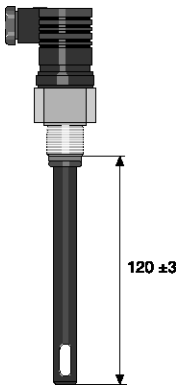

pk_6_086

LFTK 1 DE

Measurement range	0.01…20 mS/cm
Cell constant k	1 cm^{-1} ±5 %
Temperature compensation	Pt 1000
Fluid temperature	0…80 °C
Max. pressure	16.0 bar
Electrode material	special graphite
Shaft material	Epoxy
Thread	PG 13.5
Installation length	120 ± 3 mm
Electrical connection	DIN 4 pin angle plug
Typical applications	Drinking, cooling, industrial water.The sensors in the LF… series are not wholly suitable for taking measurements in cleaning solutions containing surfactants or liquids containing solvents.

	Order no.
LFTK 1 DE	1002822

Please observe the general notes on p. → 7-48 (Overview table, conductivity sensors)

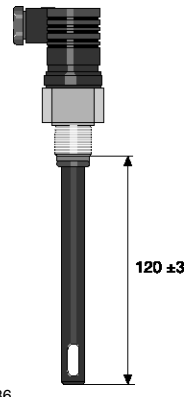

pk_6_086

LF 1 1/2"

Measurement range	0.01…20 mS/cm
Cell constant k	1 cm^{-1} ±5 %
Temperature compensation	–
Fluid temperature	0…80 °C
Max. pressure	16.0 bar
Electrode material	special graphite
Shaft material	Epoxy
Thread	1/2"
Installation length	120 ± 3 mm
Electrical connection	DIN 4 pin angle plug
Typical applications	Drinking, cooling, industrial water.The sensors in the LF… series are not wholly suitable for taking measurements in cleaning solutions containing surfactants or liquids containing solvents.

	Order no.
LF 1 1/2"	1001377

Please observe the general notes on p. → 7-48 (Overview table, conductivity sensors)

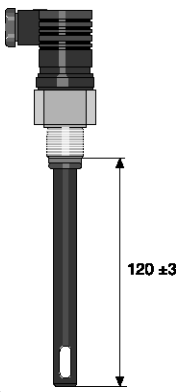

pk_6_086

LFT 1 1/2"

Measurement range	0.01…20 mS/cm
Cell constant k	1 cm^{-1} ±5 %
Temperature compensation	Pt 100
Fluid temperature	0…80 °C
Max. pressure	16.0 bar
Electrode material	special graphite
Shaft material	Epoxy
Thread	1/2"
Installation length	120 ± 3 mm
Electrical connection	DIN 4 pin angle plug
Typical applications	Drinking, cooling, industrial water.The sensors in the LF… series are not wholly suitable for taking measurements in cleaning solutions containing surfactants or liquids containing solvents.

	Order no.
LFT 1 1/2"	1001378

Please observe the general notes on p. → 7-48 (Overview table, conductivity sensors)

7.4 DULCOTEST® Conductivity Sensors

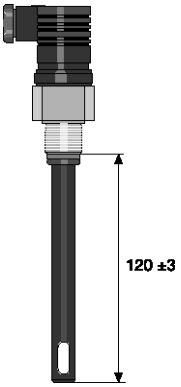

pk_6_086

LFTK 1 1/2"

Measurement range	0.01…20 mS/cm
Cell constant k	1 cm^{-1} ±5 %
Temperature compensation	Pt 1000
Fluid temperature	0…80 °C
Max. pressure	16.0 bar
Electrode material	special graphite
Shaft material	Epoxy
Thread	1/2"
Installation length	120 ± 3 mm
Electrical connection	DIN 4 pin angle plug
Typical applications	Drinking, cooling, industrial water.The sensors in the LF… series are not wholly suitable for taking measurements in cleaning solutions containing surfactants or liquids containing solvents.

	Order no.
LFTK 1 1/2"	1002823

Please observe the general notes on p. → 7-48 (Overview table, conductivity sensors)

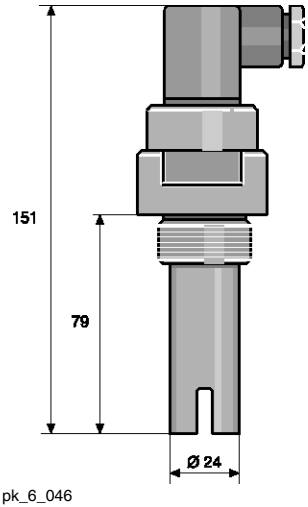

pk_6_046

CK 1

Measurement range	0.01…20 mS/cm
Cell constant k	1 cm^{-1} ±5 %
Temperature compensation	–
Fluid temperature	0…150 °C
Max. pressure	16.0 bar up to 20 °C
Electrode material	special graphite
Shaft material	PES
Thread	R 1"
Installation length	79 mm
Electrical connection	DIN 4 pin angle plug
Typical applications	Cooling, industrial, process water, tank and pipe, cleaning systems in breweries, dairies, media separation.

	Order no.
CK 1	305605

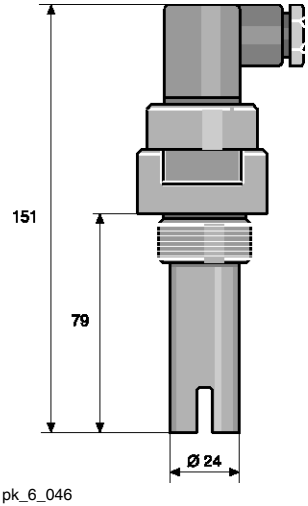

pk_6_046

CKPt 1

Measurement range	0.01…20 mS/cm
Cell constant k	1 cm^{-1} ±5 %
Temperature compensation	Pt 100
Fluid temperature	0…150 °C
Max. pressure	16.0 bar up to 20 °C
Electrode material	special graphite
Shaft material	PES
Thread	R 1"
Installation length	79 mm
Electrical connection	DIN 4 pin angle plug
Typical applications	Cooling, industrial, process water, tank and pipe cleaning systems in breweries and dairies, separation of media.

	Order no.
CKPt 1	305606

7.4 DULCOTEST® Conductivity Sensors

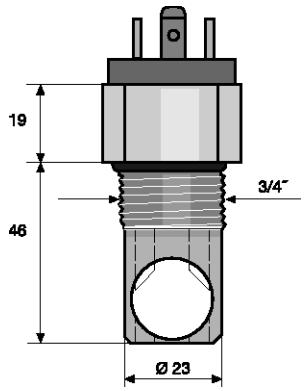

pk_6_052

LM 1

Conductivity sensor is fitted with a DIN 4 pin angle plug.

Measurement range	0.1…20 mS/cm
Cell constant k	1 cm^{-1} ±5 %
Temperature compensation	–
Fluid temperature	70 °C
Max. pressure	16.0 bar up to 50 °C
Electrode material	graphite
Shaft material	PP
Thread	3/4"
Installation length	46 mm
Electrical connection	DIN 4 pin angle plug
Typical applications	Drinking, cooling, industrial, process water, media separation

		Order no.
LM 1		740433

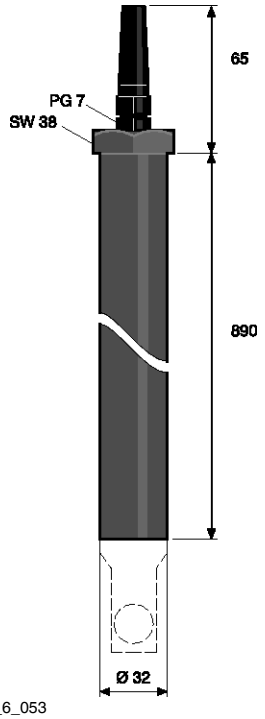

pk_6_053

LM 1-TA

Conductivity sensor has a 5 m fixed cable and fits inside the immersion assembly TA-LM (see Chap. 8.5).

Measurement range	0.1…20 mS/cm
Cell constant k	1 cm^{-1} ±5 %
Temperature compensation	–
Fluid temperature	70 °C
Max. pressure	16.0 bar up to 50 °C
Electrode material	graphite
Shaft material	PP
Thread	M 28 x 1.5 for TA-LM in-line probe fitting
Installation length	
Electrical connection	5 m fixed cable
Typical applications	Drinking, cooling, industrial, process water, media separation

		Order no.
LM 1-TA	–	1020528
LM 1-FE	spare sensor for LM 1-TA	1020627

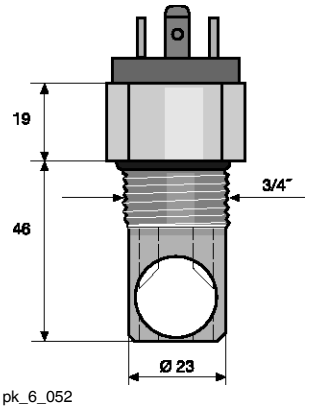

pk_6_052

LMP 1

Conductivity sensor with DIN 4 pin plug and Pt 100 for temperature compensation.

Measurement range	0.1…20 mS/cm
Cell constant k	1 cm^{-1} ±5 %
Temperature compensation	Pt 100
Fluid temperature	70 °C
Max. pressure	16.0 bar up to 50 °C
Electrode material	graphite
Shaft material	PP
Thread	3/4"
Installation length	46 mm
Electrical connection	DIN 4 pin angle plug
Typical applications	Drinking, cooling, industrial, process water, media separation

		Order no.
LMP 1		1020513

Please observe the general notes on p. → 7-48 (Overview table, conductivity sensors)

7.4 DULCOTEST® Conductivity Sensors

LMP 1-TA

The conductivity sensor has a 5 m fixed cable and Pt 100 for temperature compensation fits inside the immersion assembly TA-LM (see Chap. 8.5).

Measurement range	0.1…20 mS/cm
Cell constant k	1 cm^{-1} ±5 %
Temperature compensation	Pt 100
Fluid temperature	70 °C
Max. pressure	16.0 bar up to 50 °C
Electrode material	graphite
Shaft material	PP
Thread	M 28 x 1.5 for TA-LM in-line probe fitting
Installation length	
Electrical connection	5 m fixed cable
Typical applications	Drinking, cooling, industrial, process water, media separation

		Order no.
LMP 1-TA	–	1020525
LMP 1-FE	Spare sensor for LMP 1-TA	1020727

Please observe the general notes on p. → 7-48 (Overview table, conductivity sensors)

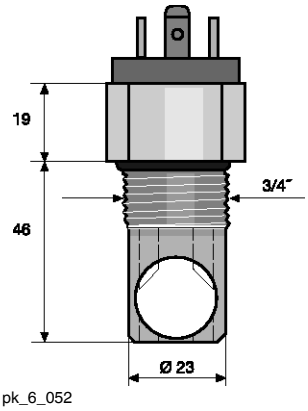

pk_6_052

LMP 1-HT

Conductivity sensor for higher temperatures is fitted with a DIN 4 pin plug.

Measurement range	0.1…20 mS/cm
Cell constant k	1 cm^{-1} ±5 %
Temperature compensation	Pt 100
Fluid temperature	120 °C
Max. pressure	16.0 bar up to 100 °C
Electrode material	graphite
Shaft material	PVDF
Thread	3/4"
Installation length	46 mm
Electrical connection	DIN 4 pin angle plug
Typical applications	General applications at higher temperatures industrial, process water, media separation, CIP in breweries and dairies

	Order no.
LMP 1-HT	1020524

Please observe the general notes on p. → 7-48 (Overview table, conductivity sensors)

7.4 DULCOTEST® Conductivity Sensors

7.4.3 Inductive Conductivity Sensors

Electrode-free inductive conductivity sensors are used to measure the electrolytic conductivity over a wide measurement range in heavily soiled and/or aggressive media and offer a particularly low maintenance operating method. The sensors are particularly suitable for the measurement of high conductivity levels since there is no electrode polarisation. The inductive conductivity sensors are operated with the D1Ca xx L6 ... controller. The controller includes the test and calibration kit (1026958).

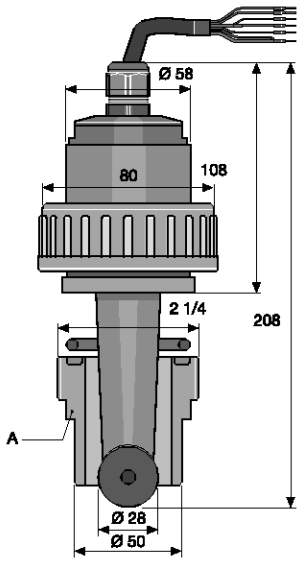

pk_6_087
Adhesive joints PVC
Fusion joints
PP
DN 40

ICT 1

Economical inductive conductivity sensors for all soiled water types and for high conductivity levels. The ICT 1 sensor is designed for in-flow measurement and is installed in DN40 pipes (optionally PVC or PP).

Measurement range	0.2…1,000 mS/cm
Cell constant k	8.5 cm^{-1} ±5 %
Measuring accuracy	< 1 % referred to final value of measuring range
Temperature compensation	Pt 100
Process chemical temperature	0…70 °C
Max. pressure	8.0 bar up to 40 °C 1.0 bar up to 70 °C
Material	Sensor: PP, Seals: FPM
Electrical connection	7 m fixed cable
Enclosure rating	IP 65
Measurement and control equipment	D1C for inductive conductivity (see section 7.1.6)
Typical applications	All types of soiled water, desalination control in cooling towers, control of electroplating baths, Cleaning in Place (CIP), product monitoring
Assembly	With union nut, 2 1/4 imperial internal thread, DN 40, PVC incl. DN40. Adhesive joints with 2 1/4 imperial external thread for installation in DN 40 standard PVC pipes (included in delivery scope).The corresponding fusion joints for installation in standard PP pipes are available as accessories (see Chap. 8.5.5)

		Order no.
ICT 1	–	1023244

7.4 DULCOTEST® Conductivity Sensors

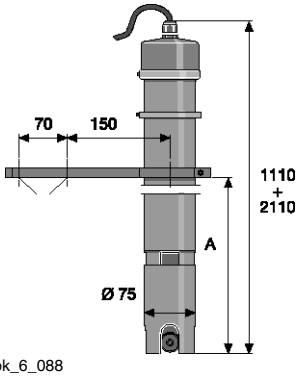

pk_6_088

A = min. 155 mm / max. 1 m or 2 m

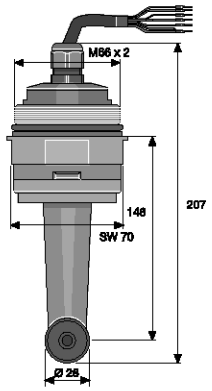

pk_6_089

ICT 1-IMA

Economical inductive conductivity sensors for all soiled water types and high conductivity levels. The immersion sensors ICT 1-IMA-1 m and ICT 1-IMA-2 m comprise the ICT 1-IM sensor and the ready-fitted IMA-ICT 1 immersion pipe in the length 1 m or 2 m.

Measurement range	0.2…1,000 mS/cm
Cell constant k	8.5 cm^{-1} ±5 %
Measuring accuracy	< 1 % referred to final value of measuring range
Temperature compensation	Pt 100
Process chemical temperature	0…70 °C
Max. pressure	8.0 bar up to 40 °C 1.0 bar up to 70 °C
Material	Sensor: PP, Seals: FPM
Electrical connection	7 m fixed cable
Enclosure rating	IP 65
Measurement and control equipment	D1C for inductive conductivity (see section 7.1.6)
Typical applications	All types of soiled water, desalination control in cooling towers, control of electroplating baths, Cleaning in Place (CIP), product monitoring
Assembly	Complete immersion sensor with immersion pipe 1 m or immersion pipe 2 m. The assembly accessories for the immersion assembly IPHa 3-PP (see Chap. 8.5.4) can also be used for the immersion sensor.

		Order no.
ICT 1-IMA 1 m	–	1023349
ICT 1-IMA 2 m	–	1023351
ICT 1-IM	Spare sensor for ICT 1-IMA-1 m and ICT-IMA-2 m	1023245

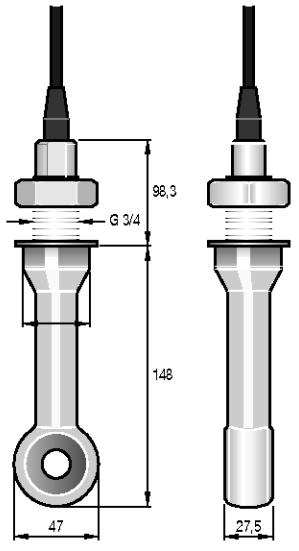

pk_6_082

ICT 2

High-performance sensor for aggressive media, maximum conductivity and high temperatures. Available for installation in tanks, pipes or the immersion assembly IMA-ICT 2.

Measurement range	0.02…2,000 mS/cm
Cell constant k	1.98 cm^{-1}
Measuring accuracy	± (5 µS/cm + 0.5 % of the measured value) at T < 100 °C) ± (10 µS/cm + 0.5 % of the measured value) at T > 100 °C)
Temperature compensation	Pt 100, class A, completely extrusion-coated
Process chemical temperature	0…125 °C for use together with D1C, temperature compensation is limited to 100 °C
Max. pressure	16.0 bar
Material	PFA, completely extrusion-coated
Electrical connection	5 m fixed cable
Enclosure rating	IP 67
Measurement and control equipment	D1C
Typical applications	Production processes in the chemical industry, phase separation of product mixtures, determination of concentrations of aggressive chemicals.
Assembly	Installation in pipes, tanks (on the side): G 3/4 stainless steel thread (1.4571). or flange-mounted: with accessories: stainless steel flange ANSI 2 imperial 300 lbs, SS 316L (can be adapted to DIN counter-flange DN 50 PN 16) (see Chap. 8.5.5).

		Order no.
ICT 2	–	1023352

7.5 DULCOTEST® Measuring Points for Turbidity

7.5.1 Measuring Points for Turbidity

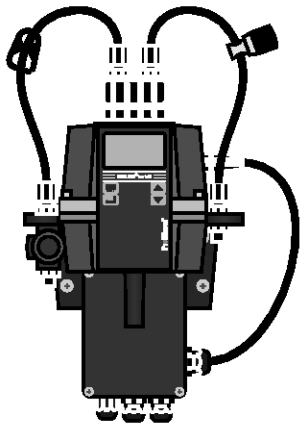

P_DMZ_0002_SW

The new DULCOTEST® measuring points for turbidity in the DULCO® turb C range with versions TUC1, TUC2, TUC3 and TUC4, are compact online turbidity measuring points, consisting of a sensor, inline flow fitting and measuring device. The measuring device permits the measured value to be displayed, calibration, transmission of the measured value via a 4-20 mA signal and the indication of limit value transgressions and device faults. The measuring cuvette integrated in the measuring device enable the device to operate in the bypass of the process line. The visual measuring unit does not come into contact with the sampel medium.

The intended application is the treatment of drinking water, whereby the DULCO® turb C can be used in all treatment stages of raw water, from filter monitoring to measurement of fine turbidity in dispensed drinking water. It is also possible to monitor the turbidity of slightly contaminated process water and waste water, as well as treated water from the food and beverage industry up to a turbidity value of 1,000 NTU. Compared with the TUC 1 / TUC 2, the measuring stations TUC 3 / TUC 4 include an ultrasound-based self-cleaning function. This helps in particular to extend the service intervals particularly when used with the types of water that form films.

The measuring principle is identical to light scatter measurements. The light beam that is beamed into the measuring cuvette filled with sample water is dispersed on turbidity particles and the scattered light is measured at right angles (90°) to the beamed in light (Nephelometric measurement). The measuring unit for the turbidity measurement can be given as NTU (Nephelometric Turbidity Unit) or as FNU (Formazin Nephelometric Unit). The measuring process of types TUC1/TUC3 (infrared light) corresponds to the globally applicable standard ISO 7027 and the European Standard DIN EN 27027. The measuring process of types TUC3/TUC4 (achromatic light) corresponds to the US American standard USEPA 180.1.

Technical Data

Measurement range	0 … 1,000.0 NTU
Accuracy	± 2 % of the displayed value or ± 0.02 NTU below 40 NTU, depending on which value is the greater ± 5 % of the displayed value above 40 NTU
Resolution	0.0001 NTU below 10 NTU
Response time	configurable
Display	Multiple row LCD display with background lighting
Alarm relay	Two programmable alarms, 120-240 VAC, 2 A Form C relay
Output signal	4 ... 20 mA, 600 Ω, not electrically isolated: dual-isolated, degree of interference, overvoltage category II
Communication interface	Bi-directional RS-485, Modbus
Max. pressure	Integrated pressure regulating valve regulates 1380 kPa (200 psi), based on the flow rate
Flow	6 – 60 l/h
Temperature	1 … 50 °C
Material that comes into contact with the media	Polyamide (PA), silicone, polypropylene (PP), stainless steel, borosilicate glass
Voltage supply	100 - 240 VAC, 47-63 Hz, 80 VA
Ambient conditions	Nicht geeignet für den Gebrauch im Freien. Einsatzhöhe maximal 2000 m ü NN. Maximal 95 % relative Luftfeuchtigkeit (nicht kondensierend).
Enclosure rating	IP 66
Standard	USEPA 180.1 with the "Infrared" version, ISO 7027 or DIN EN 27027 with the "Achromatic light" version
Dimensions H x W x D	35 x 30 x 30 cm
Shipping weight	2.5 kg

	Standard	Ultraschallreinigung	Order no.
TUC 1	Infrared: ISO 7027, DIN EN 27027	No	1037696
TUC 2	Achromatic light: US EPA 180.1	No	1037695
TUC 3	Infrared: ISO 7027, DIN EN 27027	Yes	1037698
TUC 4	Achromatic light: US EPA 180.1	Yes	1037697

7.5 DULCOTEST® Measuring Points for Turbidity

Spare parts

	Order no.
Drying agent	1037701
Cuvette TUC 1 / TUC 2	1037877
Cuvette TUC 3 / TUC 4	1037878
Infrared lamp TUC 1 / TUC 3	1037702
Achromatic light lamp TUC 2 / TUC 4	1037703
Hose kit	1037879
Pressure regulating valve	1037885

Accessories

	Order no.
Calibration set	1037699
Flow control	1037880
Air bubble trap	1037790

7.6 Sensor Technology Accessories

7.6.1 Sensor Accessories

General guidelines:

- Ensure that signal leads are as short as possible.
- Ensure signal leads are separated from power cables running parallel to them.
- Use pre-assembled combined signal leads wherever possible.

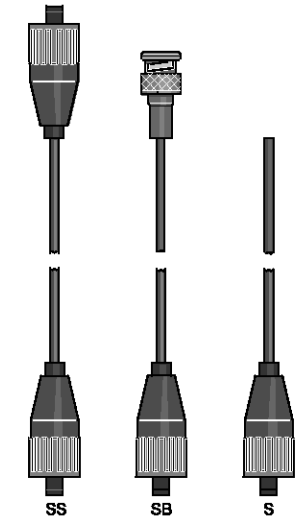

pk_6_054

Signal leads for pH/ORP measurement

- Pre-assembled to facilitate installation
- Factory tested to ensure function reliability
- IP 65

Type	Description	Order no.
2 x SN6	Coaxial cable Ø 5 mm, 0.8 m - SS	305077
–	Coaxial cable Ø 5 mm, 2.0 m - SS	304955
–	Coaxial cable Ø 5 mm, 5.0 m - SS	304956
–	Coaxial cable Ø 5 mm, 10.0 m - SS	304957
SN6 - open end	Coaxial cable Ø 5 mm, 2.0 m - S	305030
–	Coaxial cable Ø 5 mm, 5.0 m - S	305039
–	Coaxial cable Ø 5 mm, 10.0 m - S	305040
–	Coaxial cable Ø 5 mm, 20.0 m - S	304952
SN6 - BNC	Coaxial cable Ø 3 mm, 10.0 m - SB	305099
SN6 - DIN	Coaxial cable Ø 5 mm, 0.8 m - SD	305098
SN6 - DIN	Coaxial cable Ø 5 mm, 2.0 m - SD	304810
SN6 - open end d5 (DSR)	Cable combination coax 2.0 m - S	1005672

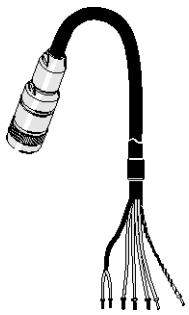
pk_6_069

Signal leads for sensors with Vario Pin plug

Pre-assembled 6-core signal lead with Vario Pin plug for connection to sensor PHEPT 112 VE.

	Length m	Order no.
Vario Pin signal lead VP 6-ST/ 2 m	2	1004694
Vario Pin signal lead VP 6-ST/ 5 m	5	1004695
Vario Pin signal lead VP 6-ST/10 m	10	1004696

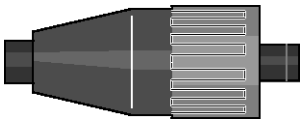
pk_6_056

SN6 coax connector

K 74 crimping pliers and a soldering iron are required for connecting coax connectors to cables.

	Order no.
SN6 coaxial plug for 5 mm Ø coaxial signal lead	304974
SN6 coaxial plug for 3 mm Ø coaxial signal lead	304975


pk_6_055

LK coax signal cable

For pH and ORP measurements.

	Order no.
Coax low noise Ø 5 mm, black	723717
Coax low noise Ø 3 mm, black	723718

Please specify length with order.

7.6 Sensor Technology Accessories

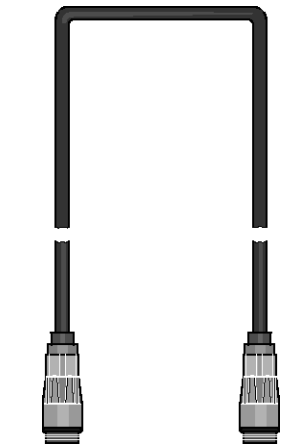

pk_6_057



pk_1_085

Signal leads for -4P type chlorine sensors

The signal lead is required for connecting sensors ...-4P to the measuring device/controller D_4a..

- Pre-assembled to facilitate installation
- Factory tested to ensure function reliability
- IP 65

	Length m	Order no.
Signal leads for -4P type chlorine sensors	2	818455
Signal leads for -4P type chlorine sensors	5	818456
Signal leads for -4P type chlorine sensors	10	818470

Signal leads for DMT type chlorine sensors

The signal lead is required for connection of DMT type sensors to the DMT transducer.

	Length m	Order no.
5 core universal cable, 5 pin round plug	2	1001300
5 core universal cable, 5 pin round plug	5	1001301
5 core universal cable, 5 pin round plug	10	1001302

Cable accessories for CAN-type chlorine sensors

	Order no.
T-distributor M12 5 pole CAN	1022155
Termination resistance M12 coupling	1022154
Termination resistance M12 plug	1022592
Connecting cable - CAN M12 5 pole 0.5 m	1022137
Connecting cable - CAN M12 5 pole 1 m	1022139
Connecting cable - CAN M12 5 pole 2 m	1022140
Connecting cable - CAN M12 5 pole 5 m	1022141
Connecting cable - CAN (by the metre)	1022160
Plug-CAN M12 5 pole Screw terminal	1022156
Coupling-CAN M12 5 pole Screw terminal	1022157

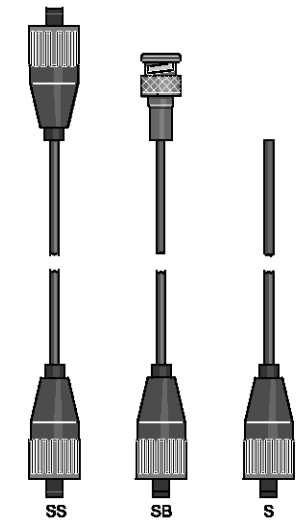

pk_6_054

Signal leads for Pt 100/Pt 1000 (2 x 0.5 mm²)

	Length m	Order no.
SN6 - open ended	5	1003208
SN6 - open ended	10	1003209
SN6 - open ended	20	1003210

7.6 Sensor Technology Accessories


pk_6_055_2

LKT signal lead for conductivity sensors

4-core, shielded, Ø 6.2 mm

	Order no.
Please specify length with order.	723712

Two-wire signal lead (2 x 0,25 mm²; Ø 4 mm)

For -mA type chlorine/bromine/chlorine dioxide/ozone sensors and pH, ORP, Pt 100, conductivity transducers.

	Order no.
Please specify length with order.	725122

Connector cable

For fluid voltage comparison in-line probe housing DLG III and DGMA with connector, 5 m.

	Length m	Order no.
Connector cable	5	818438

Test and calibration kit for inductive conductivity

	Order no.
Test and calibration kit	1026958

7.6 Sensor Technology Accessories

7.6.2 Consumable Items For Sensors

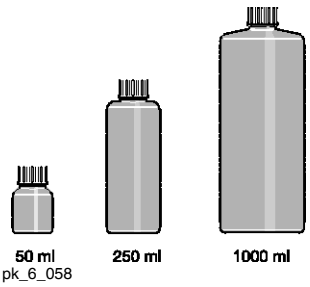

pH quality buffer solutions

Accuracy ±pH 0.02 (±0.05 at pH 10). The shelf life depends upon frequency of use and the amount of chemical drag-in.

Alkaline buffer solutions can react with CO_2 if left open. This will affect their values, therefore close after use. Buffer solutions should be replaced after a maximum of three months after opening. The solution contains a biocide to prevent bacteria forming.

	Capacity ml	Order no.
Buffer pH 4.0 – red	50	506251
Buffer pH 4.0 – red	250	791436
Buffer pH 4.0 – red	1,000	506256
Buffer pH 5.0 – red	50	506252
Buffer pH 7.0 – green	50	506253
Buffer pH 7.0 – green	250	791437
Buffer pH 7.0 – green	1,000	506258
Buffer pH 9.0	50	506254
Buffer pH 9.0	1,000	506259
Buffer pH 10.0 – blue	50	506255
Buffer pH 10.0 – blue	250	791438
Buffer pH 10.0 – blue	1,000	506260

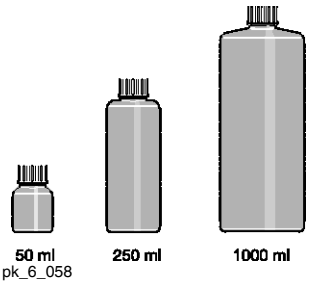

ORP quality buffer solutions

Accuracy to ±5 mV. Shelf life depends upon frequency of use and the strength of the chemicals in sample solutions.

Buffer solutions should be replaced after a maximum of three months after opening.

Warning: The 465 mV ORP buffer solution is an irritant!

	Capacity ml	Order no.
ORP buffer 465 mV	50	506240
ORP buffer 465 mV	250	791439
ORP buffer 465 mV	1,000	506241
ORP buffer 220 mV	50	506244
ORP buffer 220 mV	1,000	506245

DPD-reagents for calibration of amperometric sensors s. p. → 8-79

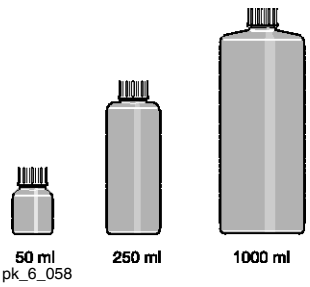

3 molar KCl solutions

3 molar KCl solution is ideally suited to the protection of pH and ORP sensors (e.g. in electrode case) and as an electrolyte for refillable electrodes (e.g. PHEN, RHEN). However, for earlier version refillable electrodes with reference electrodes without the larger AgCl reservoir we recommend the AgCl saturated KCl solution.

	Capacity ml	Order no.
KCl solution, 3 molar	50	505533
KCl solution, 3 molar	250	791440
KCl solution, 3 molar	1,000	791441
KCl solution, 3 molar, AgCl saturated	250	791442
KCl solution, 3 molar, AgCl saturated	1,000	505534

7.6 Sensor Technology Accessories

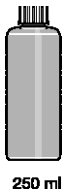

pk_6_058_2

Cleaning solutions

Pepsin/hydrochloric acid cleaning solutions:

For cleaning pH electrode diaphragms contaminated with protein.

Capacity	Order no.
250 ml	791443

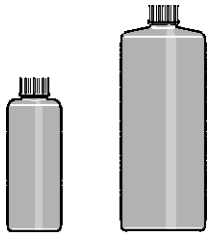

pk_6_058_3

Conductivity calibration solution

For the accurate calibration of conductivity sensors.

	Capacity ml	Order no.
Conductivity calibration 1413 µS/cm	250	1027655
Conductivity calibration 1413 µS/cm	1,000	1027656
Conductivity calibration 12.88 mS/cm	250	1027657
Conductivity calibration 12.88 mS/cm	1,000	1027658


pk_6_061

Electrolyte for amperometric sensors

	Capa-city ml	Order no.
CLE all chlorine sensors electrolyte	100	506270
CDM 1 and CDE 3 type chlorine dioxide sensors electrolyte	100	506271
CDE 2; CDR 1 chlorine dioxide sensors electrolyte	100	506272
OZE ozone sensors electrolyte	100	506273
Electrolyte for sensors types CGE/CTE/BRE	50	792892
Electrolyte for chlorine dioxide sensors type CDP	100	1002712
Electrolyte for peracetic acid sensors type PAA 1	100	1023896
Electrolyte for chlorine sensors type CLT 1	50	1022015
Electrolyte for hydrogen peroxide sensors type PER 1	50	1025774
Electrolyte for chlorine sensor type CLO 1	100	1035191
Electrolyte for chlorine sensor type CLO 2	100	1035480
Electrolyte for chlorine/bromine measuring cell type CBR 1	100	1038017

7.6 Sensor Technology Accessories

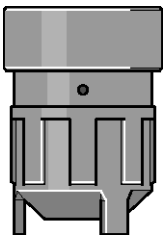

pk_6_075

Spare membrane caps, accessory sets for amperometric sensors

	Capacity ml	Order no.
Membrane cap for types CLE II T, CDM 1 and OZE 1	–	790486
Membrane cap for types: CLE 2.2, CLE 3, CDE 1.2, CDE 2, OZE 2 and OZE 3	–	790488
Sensor cap for CLO 1	–	1035197
Sensor cap for CLO 2	–	1035198
Membrane cap for CGE/CTE 1 (2/5/10 ppm) and BRE 1	–	792862
Membrane cap CTE 1 (0.5 ppm), CBR 1	–	741274
Membrane cap for CDP 1	–	1002710
Membrane cap for CDE 3	–	1026578
Membrane cap for PAA 1, CDR 1	–	1023895
Membrane cap for CLT 1	–	1021824
Membrane cap for PER 1	–	1025776
Membrane cap for H2.10 P	–	792978
Accessory set for CGE 2/CTE 1 (2/5/10 ppm) and BRE 1 (2 membrane caps + electrolyte)	50	740048
Accessory set for CTE 1 (0.5 ppm) (2 membrane caps + electrolyte)	50	741277
Accessory set for CLE (2 membrane caps + electrolyte)	100	1024611
Accessory set for CDP 1 (2 membrane caps + electrolyte)	100	1002744
Accessory kit CLT 1 (2 membrane caps + electrolyte)	100	1022100
Accessory kit PAA 1 (2 membrane caps + electrolyte)	100	1024022
Accessory kit PER 1 (2 membrane cap + electrolyte)	50	1025881
Accessory set for CDE 3 (2 membrane caps + electrolyte)	100	1026361
Accessory set for CLO 1 (electrolyte, grinding disc, plug)	100	1035482
Accessory set for CLO 2 (electrolyte, grinding disc, plug)	100	1035483

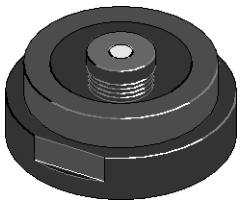

pk_6_062

Spare parts for dissolved oxygen sensors

	Measuring range	Order no.
Sensor insert for DO 1-mA-20 ppm: Membrane thickness 125 µm	2.00…20.0 mg/l	1020534
Sensor insert for DO 2-mA-10 ppm: Membrane thickness 50 µm	0.10…10.0 mg/l	1020535
Bracket for the sensor insert for DO 1-mA-20 ppm (with membrane protection for fish farming)		1020540
Bracket for the sensor insert for DO 2-mA-10 ppm		1020541

7.6 Sensor Technology Accessories

7.6.3 Probe Fittings

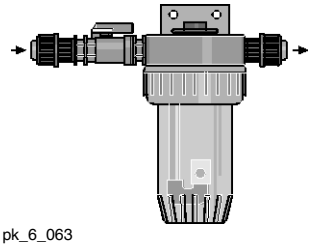

pk_6_063

DLG III type in-line probe housing

To accept 2 sensors (conductivity, Pt 100, pH or ORP sensors) with PG 13.5 screw-in thread, as well as a sensor with R 1" thread (amperometric sensors) with integrated stainless steel pin as liquid reference potential.

The DLG III is fitted with a plastic ball valve on the input side for stopping and adjusting the sample water flow.

Material	Material: Rigid PVC Transparent housing cup: Polyamide Ball valve material: Rigid PVC
Max. pressure	1.0 bar
Max. temperature	55 °C

	Type	Max. temperature °C	Order no.
DLG III A with PVC hose connectors	for PE line Ø 8/5 mm	55	914955
DLG III A with flushing connector and PVC hose connection	for PE line Ø 8/5 mm	55	1029096
DLG III B with PVC adhesive connectors	for pipe connection Ø 16 DN 10	55	914956
Assembly kit for fitting amperometric sensors	–	55	815079

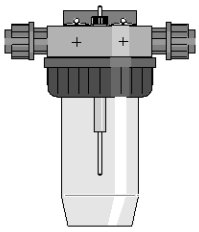

pk_6_070

DLG IV type in-line probe housing

To take 4 sensors (pH, ORP, Pt 100, conductivity) with PG 13.5 threaded connector, with integrated stainless steel pin as liquid reference potential. Bracket for wall mounting.

Material	Material: Hard PVC or PP Transparent housing cup: Polyamide
Max. pressure	1.0 bar
Connection for sample water line	Union with d 16/DN 10 insert

	Type	Max. temperature °C	Order no.
DLG IV PP	for Ø 16/DN 10 pipe work connector	80	1005331
DLG IV PVC	for Ø 16/DN 10 pipe work connector	55	1005332

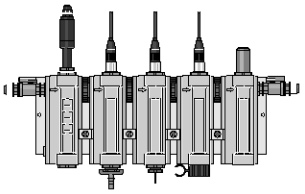

pk_6_066

DGM modular in-line probe housing

To accept conductivity, Pt 100, pH or ORP sensors with PG 13.5 screw-in thread, or amperometric sensors with R 1" screw-in thread.

Advantages:

- Simple to assemble (already mounted on panel up to max. 7 units)
- Simple retrofit expansion possibility (see expansion modules)
- Module for monitoring flow of sampled water
- Simple to calibrate measured variables due to low sample water volume
- Ball valve on either end for adjusting and impeding flow

Each fully-assembled DGM is equipped with a single sampling cock.

Material	All modules: Transparent PVC Seals: FPM Calibration cup: PP Mounting panel: PVC white
Max. temperature	60 °C

7.6 Sensor Technology Accessories

Max. pressure	6.0 bar up to 30 °C 1.0 bar up to 60 °C
Max. flow rate	80 l/h
Recommended Flow volume	40 l/h
Flow sensor	Reed contact max. switch power 3 W max. switch voltage 175 V max. switch current 0.25 A max. operating current 1.2 A max. contact resistance 150 mΩ
Switch hysteresis	20 %
Enclosure rating	IP 65
Typical applications	Potable, swimming pool water or water of similar quality with no suspended solids
Assembly	Max. 5 modules pre-assembled onto baseboard: more than 5 modules, pre-assembled onto baseboard as custom version, priced accordingly.

FPM = fluororubber

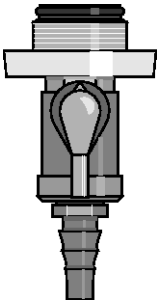

pk_6_071

Sampling tap for DGM

for PG 13.5 and 25 mm modules designed as a convenient ball valve.

	Order no.
PG 13.5 sampling tap	1004737
25 mm sampling tap	1004739

Expansion modules for DGM

For simple retrofit to an existing DGM.

	Order no.
Flow expansion module with scale in l/h	1023923
Flow expansion module with scale in gph	1023973
Flow sensor for flow expansion module (optional)	791635
Expansion module for PG 13.5 sensors	1023975
Expansion module for 25 mm sensors	1023976

Connecting lead

For fluid voltage comparison in-line probe housing DLG III and DGMA with connector, 5 m.

	Order no.
Connector cable	818438

Isolation ball valve for DGM

to isolate the bypass from the process flow

	Order no.
Stopcock	1010380

Mounting kit for sensor/DGM

for mounting amperometric sensors with R 10 connection

	Order no.
Mounting kit for sensor/DGM	791818

7.6 Sensor Technology Accessories

Identcode Ordering System For In-Line Probe Housing Modules

DGM	Series								
	A	Series Version							
		Flow monitor module							
		1	with l/h scale						
		2	with gph scale (US)						
		3	With flow monitor, l/h scale						
		4	with flow monitor, gph scale (US)						
			Number of PG 13.5 modules						
			0	No PG 13.5 modules					
			1	One PG 13.5 modules					
			2	Two PG 13.5 modules					
			3	Three PG 13.5 modules					
			4	Four PG 13.5 modules					
				Number of 25 mm modules					
				0	No 25 mm modules				
				1	One 25 mm module				
				2	Two 25 mm modules				
					Main material				
					T	Transparent PVC			
						Sealing material			
						0	FPM A		
							Hydraulic connectors		
							0	8 x 5 hose	
							1	PVC DN 10 threaded connector	
							4	Hose 12 x 6	
								Version	
								0	With ProMinent® logo
								1	Without ProMinent® logo
								2	With ProMinent® logo, without mounting plate
								3	Without ProMinent® logo, without mounting plate

Accessories included:

- Wall mounting for Pg 13.5 module: calibration cup, Pg 13.5 sensor assembly set

The Identcode DGM A 3 2 1 T 0 0 0 describes a fully assembled combination of flow monitor with sensor, two Pg 13.5 modules (e.g. for pH and ORP sensors) and a 25 mm module (e.g. for chlorine sensor CLE 3). Fitted with 8 x 5 hose connector.

Recommended accessories

		Order no.
for potential equalizer plug	–	791663
Flow sensor for flow expansion module (optional)	–	791635
additional calibration cup	–	791229
PG 13.5 sampling tap	for 13.5 module	1004737
25 mm sampling tap	for 25 mm module	1004739

- max. 7 modules possible on a mounting plate
- more on request

FPM = fluororubber

7.6 Sensor Technology Accessories

7.6.4 Immersion Probe Fittings

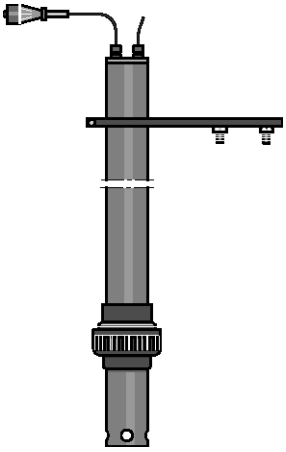

pk_6_064

PVC immersion assembly, type ETS 1 P

To take **one** conductivity, Pt 100, pH or ORP sensor, with SN6 plug and PG 13.5 threaded connector (with integrated stainless steel pin as liquid reference potential).

Sensor connector (inner)	SN6 connector
Signal lead connector (outer)	Coax SN6 male connector
Material	Rigid PVC
Type of fitting	Clamping flange with mounting plate
Immersion depth	Variable
Max. temperature	55 °C

	Order no.
ETS 1 P	914950

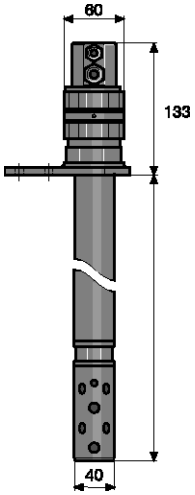

pk_6_080

PP immersion assembly type IPHa 1-PP

To hold **one** sensor (e.g. pH, ORP) with PG 13.5 internal thread, standard length 120 mm. The inside diameter is designed to accept pH or ORP transducer. Also incorporates a stainless steel pin for fluid reference potential. The outside diameter is 40 mm. Immersion depths 1 or 2 m available but the customer can shorten the immersion lance/cut to length on site. The assembly head contains two threaded cable connectors. 3-7 mm signal leads can be connected to the probe fitting. Signal leads are not included in the delivery

Material	Probe housing material: PP Seal material: FPM
Max. temperature	80 °C
Pressure	Installation at atmospheric pressure
Immersion depth	max. 1, or 2 m; variable
Immersion lance diameter	40 mm

	Length when fitted m	Order no.
IPHa 1-PP	1	1008600
IPHa 1-PP	2	1008601

Other materials available on request.

FPM = fluororubber

7.6 Sensor Technology Accessories

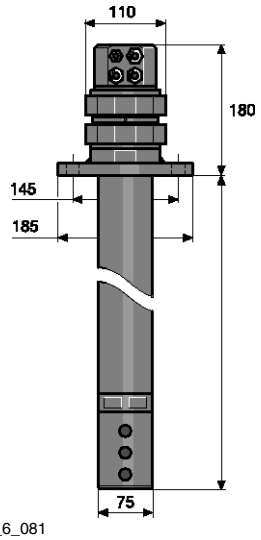

pk_6_081

Fixed flange	DN 40	DN65
Pitch circle	110 mm	145 mm
Screws	4 x M16	4 x M16
Thickness d_2	18 mm	18 mm
Diameter	150 mm	185 mm

PP immersion assembly type IPHa 3 -PP

To accept a max. **three** sensors (e.g. pH, ORP, temperature) with PG 13.5 internal thread, standard length 120 mm. The inside diameter is designed to accept up to three pH, temperature and ORP transducers at the same time. Also incorporates a stainless steel pin for fluid reference potential. The outside diameter is 75 mm. Immersion depths 1 or 2 m available but the customer can shorten the immersion lance on site. The probe fitting head contains four threaded cable connectors. 3-7 mm signal leads can be connected to the probe fitting. Signal leads are not included in the delivery. Technical specification as for IPHa 1 but immersion lance diameter is 75 mm.

	Length when fitted m	Order no.
IPHa 3-PP	1	1008602
IPHa 3-PP	2	1008603

Other materials available on request.

Accessories for fittings type IPHa

	Order no.
Immersion pipe mounting for IPHa 1-PP	1008624
Immersion pipe mounting for IPHa 3-PP	1008625
Clamped threaded connector with fixed flange DN 40 according to DIN 2642 for IPHa 1-PP	1008626
Clamped threaded connector with fixed flange DN 65 according to DIN 2642 for IPHa 3-PP	1008627
Clamped threaded connector for welding connection for IPHa 1-PP	1008628
Clamped threaded connector for welding connection for IPHa 3-PP	1008629
Protective (weatherproofed) cover for assembly head for IPHa 1-PP	1008630
Protective (weatherproofed) cover for assembly head for IPHa 3-PP	1008631
Water-retaining basin for IPHa 1-PP	1008632
Water-retaining basin for IPHa 3-PP	1008633
Weatherproof cover PP	1023368

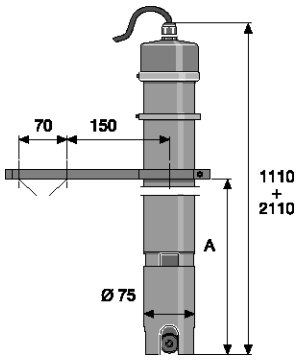

pk_6_088

A = min. 155 mm / max. 1 m or 2 m

Immersion assembly type IMA-ICT 1

To hold an inductive conductivity sensor, type ICT 1.

Material	Fittings: PP Seal: FPM
Max. temperature	70 °C
Pressure	Installation at atmospheric pressure
Immersion lance diameter	75 mm

	Order no.
IMA-ICT 1 - 1 m	1023366
IMA-ICT 1 - 2 m	1023367

Weatherproof cover for in-line probe fitting type IMA-ICT 1

For use in immersion assembly, type IMA-ICT 1.

	Order no.
Weatherproof cover PP	1023368

7.6 Sensor Technology Accessories

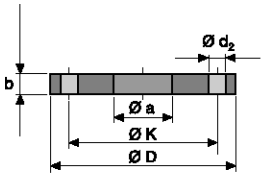

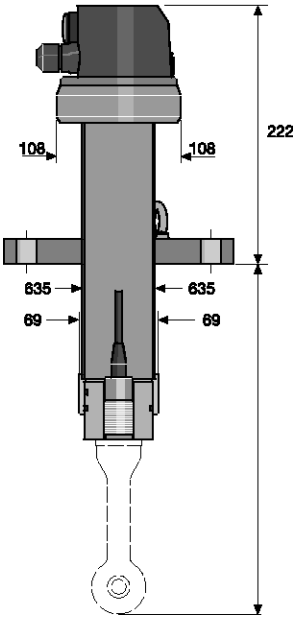

pk_6_094

Flange:	DN 80/PN 16
Ø D	200
Ø K	160
Ø d_2	8 x 18
b	20
Ø a	63.5
Screws	M 16

Immersion assembly Type IMA-ICT 2

To hold an inductive conductivity sensor, type ICT 2.

Material	Fittings: Stainless steel 1.4404 Seal: FPM
Max. temperature	125 °C
Max. pressure	10 bar
Length when fitted	1 m
Immersion lance diameter	70 mm
Flange	Stainless steel flange DN 80 PN 16

	Order no.
IMA-ICT 2	1023353

Adaptation to processes through flange installation in tank from top.

7.6 Sensor Technology Accessories

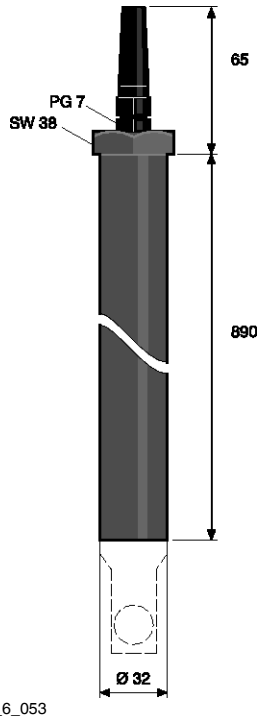

pk_6_053

Immersion assembly Type TA-LM

to hold **one** conductivity sensor type LM and LMP with M 28-thread for side fixture with circlips (2 x included as standard) or with union nut/headed bush/male screw gland in a tank cover from the top.

Union nut and male screw gland are provided by the customer (standard parts).

Material	PP
Max. temperature	70 °C
Enclosure rating	IP 68
Max. pressure	5.0
Immersion lance diameter	32 mm
Pipe length	890

	Length mm	Order no.
TA-LM	890	1020632
Headed bush d50	–	1020634
Extension tube 1000	910	1020633

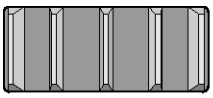

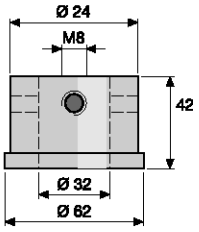

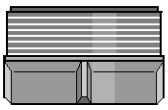

pk_6_078

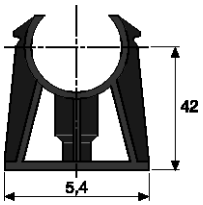

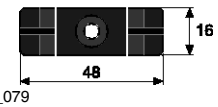

pk_6_079

7.6 Sensor Technology Accessories

7.6.5 Immersion Probe Fittings/Adaptors

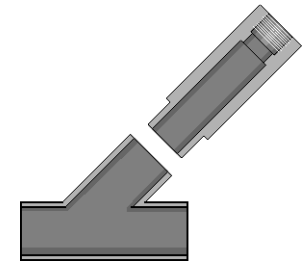

pk_6_059

Adapter set (T-piece and adapter)

For direct installation of conductivity, Pt 100, pH and ORP sensors into pipework with PG 13.5 thread:

	Material	Order no.
90° T-piece DN 20	PVC	1001493
90° T-piece DN 25	PVC	1001494
45° T-piece DN 20	PVC	1001491
45° T-piece DN 25	PVC	1001492

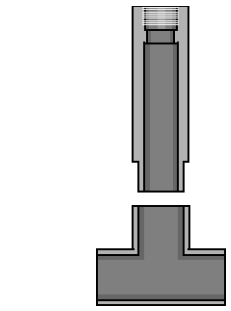

pk_6_060

PVC adapter kit for sensor types LM...

For direct installation of LM ... conductivity sensors with male thread 3/4“ for in-flow measurement.

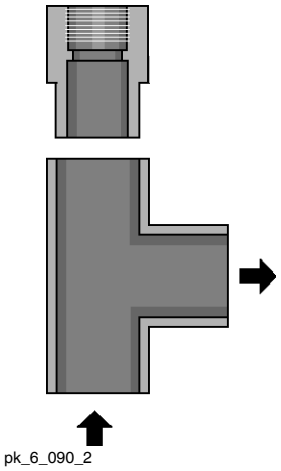

pk_6_090_2

For LM(P) 001 conductivity sensors

The sensors are in fitted into the insert of the T-joint.

	Material	Order no.
90° T-joint DN 25	PVC	356410
Adapter DN 25 with 3/4" thread	PVC	356923
90° T-joint DN 25	PP	358674
Adapter with 3/4" thread	PP	356953

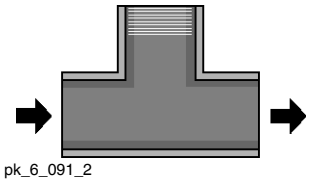

pk_6_091_2

For LM(P) 01 conductivity sensors

The sensors are in fitted in the outlet of the T-joint.

	Material	Order no.
90° T-piece DN 20 - 3/4"	PVC	356455
90° T-piece DN 20 - 3/4"	PP	356471

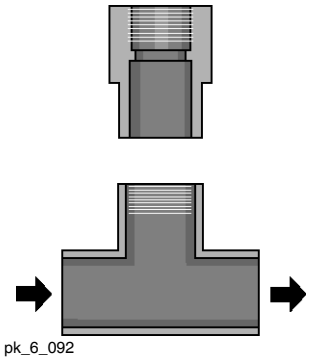

pk_6_092

For LM(P) 1 conductivity sensors

The sensors are in fitted in the outlet of the T-joint.

	Material	Order no.
90° T-joint DN 25	PVC	356410
Inline fitting DN 25 - 3/4"	PVC	1020616

7.6 Sensor Technology Accessories

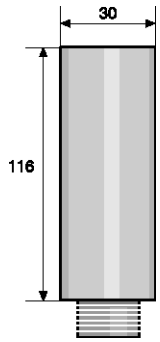

pk_6_065

Adapter PP, PG 13.5

For direct installation of conductivity, Pt 100, pH, ORP sensors with PG 13.5 male thread in e.g. pipes, tanks:

max. temp: 80 °C (no pressure)

Sealing ring, EPDM

	Material	Outer thread	Order no.
Adapter DN 20	PP	R 1/2"	1001834
Adapter DN 25	PP	R 3/4"	1001835

Adapter, stainless steel, PG 13.5

For direct installation of conductivity, Pt 100, pH, ORP sensors with PG 13.5 male thread in e.g. pipes, tanks:

max. temp: 180 °C (no pressure)

Sealing ring, FPM

	Material	Outer thread	Order no.
Adapter DN 20	SS	R 1/2"	1020737
Adapter DN 25	SS	R 3/4"	1020738

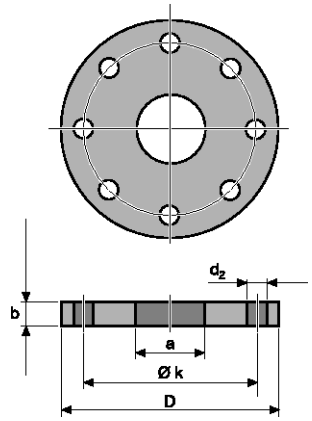

pk_6_093

Fixed flange SS 316L	ANSI 2" 300 lbs	DN 50 PN 16
Pitch circle	127	125
Screws	M 16	M 16
Thickness	22.2	18
Diameter	165.1	165

Fitting kit for Type ICT 2 sensors

For direct installation of the inductive conductivity sensor ICT 2 in pipes and tanks.

	Order no.
Fitting kit for type ICT 2 sensor	1023364

Kit consists of

- stainless steel flange ANSI 2" 300 lbs, SS 316L (adaptable to DIN counterflange, DN 50 PN 16)
- 3/4" nut, stainless steel

process wetted parts:

- 2" sealing washer, PTFE
- spacer, PTFE
- seal

Welding socket for T-piece (PP) Type ICT 1

For connection of the inductive conductivity sensor ICT 1 in T-piece PP.

	Order no.
Welding socket G 2 1/4 inch DN40 PP incl. O-ring FPM	1023371

7.6 Sensor Technology Accessories

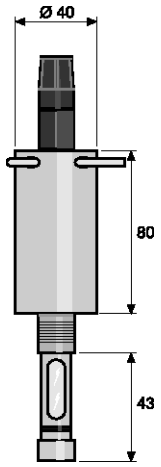

pk_6_013

Sliding retractable sensor holder for pH, ORP sensors WA-PH 1

To hold **one** pH sensor with PG 13.5 male thread and length between 110-125 mm for installation in tanks or pipe work (Fig. 2). The sensor can be removed for calibration and cleaning without draining the tanks and/or interrupting the process flow.

Material	PP
Max. temperature	70 °C
Max. pressure	5.0 bar
Thread	3/4"

	Order no.
WA-PH 1	1020631

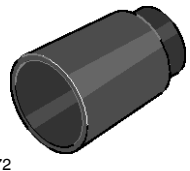
pk_6_072

Immersion pipe adapter for dissolved oxygen sensor DO 1-mA-20 ppm

PVC adapter for connection of the DO 1-mA-20 ppm dissolved oxygen sensor to an immersion pipe with 1-1/4 inch internal thread (see chap. 8.3.7).

	Order no.
Immersion pipe adapter for DO 1-mA-20 ppm	1020537

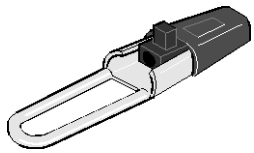
pk_6_073

Mounting bracket for cable of dissolved oxygen sensor DO 1-mA-20 ppm

The stainless steel and polyamide cable bracket is used to guide and fix the sensor cable inside the DO 1-mA-20 ppm dissolved oxygen sensor.

	Order no.
Cable bracket for DO 1-mA-20 ppm	1020539

Pipe adapter for dissolved oxygen sensor DO 2-mA-10 ppm

The PVC adapter is a spare part for the DO 2-mA-10 ppm dissolved oxygen sensor (see chap. 8.3.7). The DO 2-mA-10 dissolved oxygen sensor can be adapted to fit metric or an imperial tubing by fitting half of the adapter with 1-1/2 inch outside diameter, the other half with 50 mm outside diameter and at both ends with 1-1/4 inch internally threaded tube attached by means of a corresponding 45° standard angle piece (provided by the customer).

	Order no.
Pipe adapter for DO 2-mA-10 ppm	1020538

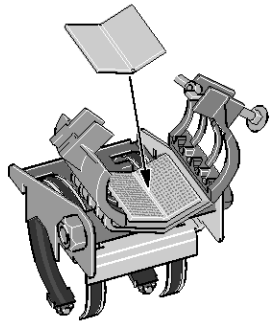
pk_6_010

Railing bracket for plastic pipes

Stainless steel and plastic bracket for fixing of plastic tubes with 50 mm outside diameter to rails (e.g. on pools in sewage plants). Spare part for "dissolved oxygen" sensor: DO 2-mA-10 ppm (see Chap. 8.3.7).

	Order no.
Railing bracket for DO 2-mA-10 ppm	1020536

7.7 Application Examples

For application examples for measuring and control systems, see Chapter 8.13.

8 Measuring And Control Technology

Contents **Page**

8.0 Overview Measuring And Control Technology 1
8.0.1 Product Overview Measuring And Control Technology 1
8.0.2 Selection Guide DULCOMETER® 3

8.1 DULCOMETER® Measuring And Control Technology 6
8.1.1 DULCOMETER® Measuring And Control Units 6

8.2 DULCOMETER® Single-channel Measuring and Control Unit, Compact for pH, Redox and Chlorine 8
8.2.1 DULCOMETER® Compact 8

8.3 DULCOMETER® Single-channel Measuring and Control Unit, Type D1Cb/D1Cc, for all Measured Variables 9
8.3.1 Single-channel Controller, Type D1Cb/D1Cc, for all Measured Variables 9
8.3.2 Identcode Ordering System D1Cb/D1Cc, for all Measured Variables 11
8.3.3 Identcode Ordering System for D1Ub, Subsequent Function Extension For D1Cb/D1Cc 12

8.4 DULCOMETER® Single-Channel Measuring And Control Unit, Type D1Ca 13
8.4.1 Measured Variables, pH And ORP Single Channel Controller, Type D1Ca 13
8.4.2 Identcode Ordering System For pH And ORP Single Channel Controller 14
8.4.3 Measured Variables Chlorine, Chlorine Dioxide, Chlorite, Bromine, Ozone, Dissolved Oxygen, Single-Channel Controller, Type D1Ca 15
8.4.4 Identcode Ordering System Cl_2, ClO_2, O_3, Br_2, Dissolved Oxygen Single Channel Controller 17
8.4.5 Measured Variable, Conductivity Single Channel Controller, Type D1Ca 18
8.4.6 Identcode Ordering System For Conductivity Single Channel Controller 20
8.4.7 Measured Variable, Temperature, Standard Signal Single Channel Controller, Type D1Ca 21
8.4.8 Identcode Ordering System For Temperature, Standard Signal Single Channel Controller 22
8.4.9 Measured Variable H_2O_2 And Peracetic Acid Single-Channel Controller, Type D1Ca 23
8.4.10 Identcode Ordering System For H_2O_2 And Peracetic Acid Single Channel Controller 25
8.4.11 Sensors For Hydrogen Peroxide 26

8.5 DULCOMETER® Two-channel measuring and control unit for the treatment of pool water, type DSRa 28
8.5.1 DULCOMETER® DSRa two-channel controller 28
8.5.2 Identcode Ordering System Two Channel Controller 29

8.6 DULCOMETER® Two-Channel Measuring And Control Unit, Type D2Ca 30
8.6.1 Combined Controller for pH/Chlorine, pH/ORP, Chlorine/Chlorine, pH/Chlorine Dioxide and pH/pH, Two-Channel Controller, Type D2Ca 30
8.6.2 Identcode Ordering System Two Channel Controller 32

8.7 Multi-Channel Measuring And Control System For Drinking Water And Swimming Pool Water Treatment 33
8.7.1 Multi-Channel Measuring And Control System DULCOMARIN®II compact 35
8.7.2 Identcode Ordering System DULCOMARIN®II compact 38
8.7.3 Multi-Channel Measuring And Control System DULCOMARIN®II DULCO®-Net 39
8.7.4 The Central Unit 41
8.7.5 The Combination Module 42

8 Measuring And Control Technology

Contents **Page**

8.7.6 Identcode Ordering System Multi-Channel Measuring And Control System DULCOMARIN® II DULCO®-Net (Central Unit And Combination Module) 43
8.7.7 M Module (Measuring Module) 44
8.7.8 I Module (Current Input Module) 45
8.7.9 A Module (Control Module) 46
8.7.10 N Module (Power Supply Module) 47
8.7.11 R Module (Control Module For Chlorine Gas Metering Units) 48
8.7.12 G-Module (Limit Value and Alarm Module) 49
8.7.13 Identcode Ordering System CANopen Modules 50
8.7.14 Spare parts and upgrade sets 51
8.7.15 Diaphragm Metering Pumps With CANopen Bus Interface 52
8.7.16 Multi-Channel Measuring And Control System DULCOMARIN®II DULCO®-Net Module Combinations 53
8.7.17 Configuration Example 1 54
8.7.18 Configuration Example 2 56
8.7.19 Accessories For The Measuring And Control System DULCOMARIN® II compact And DULCOMARIN® II DULCO®-Net 58
8.7.20 Technical Data For The Multi-Channel Measuring And Control System DULCOMARIN®II compact And DULCO®-Net 61

8.8 Controller with integral metering pump 62
8.8.1 Controller with integral metering pump 62

8.9 Cooling Tower And Boiler Controller 63
8.9.1 Cooling Water Treatment 63
8.9.2 Cooling Tower Control ProMcon 65
8.9.3 Technical Data 66
8.9.4 Cooling Tower Controller Cool-Control, Type D1Ca 67
8.9.5 Identcode Ordering System, Cool-Control, Type D1Ca 67
8.9.6 Technical Data 68
8.9.7 Cooling Tower/Boiler Controller MultiFlex M10 69

8.10 DULCOMETER® Transmitters 71
8.10.1 Measured Variables pH, ORP, Chlorine, Temperature, Conductivity, Measuring Transducer DMTa 71
8.10.2 Identcode Ordering System Measuring Transducer DMTa 73
8.10.3 DULCOMETER® DULCOPAC 74
8.10.4 Application examples for DULCOPAC 75

8.11 Measuring And Test Systems 76
8.11.1 Portamess Portable Meters, Measured Variable pH 76
8.11.2 Portamess Portable Meters Measured Variable, Conductivity 77
8.11.3 Photometer 78
8.11.4 DULCOMETER® Simulator (pH/mV/mA/Pt 100/Pt 1000) 80

8.12 Accessories For Measurement And Control Devices 81
8.12.1 Measurement Transducer 4...20 mA (Two Wire) 81
8.12.2 Accessories For Portamess® Portable Meters 82

8.13 Application Examples 83
8.13.1 Introduction 83
8.13.2 Measuring And Control Systems Consist Of 83
8.13.3 Disinfection Of Drinking Water 84
8.13.4 Cooling Water Treatment 89
8.13.5 Neutralisation Of Industrial Waste Water 91
8.13.6 Treatment of swimming pool water 93

8.0 Overview Measuring And Control Technology

8.0.1 Product Overview Measuring And Control Technology

DULCOMETER® Compact



P_DM_0026_C

The Measuring Transducer/Controller DULCOMETER® Compact for pH, redox and chlorine provides basic functions for applications in water treatment.

- pH and redox measured variables can be selected in the controller
- Measured variable chlorine
- Operation is independent of the operating language
- Compact universal housing

DULCOMETER® D1C and DULCOMETER® D2C



pk_5_055

The DULCOMETER® D1C and D2C measurement transducers/controllers form the core of the comprehensive range of ProMinent controllers and measurement transducers. They are reliable, are used in universal applications and can control many different measured variables.

DULCOMETER® D1Cb/D1Cc

- Equipped to meet the most important requirements in water treatment applications
- All measured variable and languages resident in the controller as standard
- Subsequent function enabling options simplify storage

DULCOMETER® D1Ca

- Used universally for 14 different measured variables
- Optimised process flows ensured by special functions such as disturbance variable compensation, pH compensation for chlorine, base load metering and many limit value functions
- Special “Cool-Control” version tailored to the specific requirements of cooling tower conditioning applications

DULCOMETER® D2Ca

- Efficient solution for simultaneous control/measurement of: pH/ORP, pH/chlorine, pH/pH, chlorine/chlorine and pH/chlorine dioxide
- Optimised process flows ensured by special functions such as base load metering and many limit value functionsas

8.0 Overview Measuring And Control Technology



pk_5_056

Measuring transducer DULCOMETER® DMT, DULCOPAC, Measuring transducer DULCOTEST®

DULCOMETER® transducers of type DMT are compact 2-wire transducers for use with the measured variables pH, redox, chlorine, conductive conductivity and temperature. They convert the primary sensor signal into a standard 4-20 mA signal and provide for the disturbance-free connection of the sensor to remote controllers (e.g. PLC) or DULCOMETER® controllers.

Measuring transmitter DULCOMETER® DMTa

- With display of the measured value to control it at the location of the sensor
- With a function to calibrate the sensor in its proximity
- Version for connection to PROFIBUS® DP



P_DM_0023_C1

Measuring transmitter/controller DULCOMETER® DULCOPAC

DULCOPAC transmitters are ideal for installation on top hat rails in control cabinets. DULCOPAC measures and controls the following measured variables: pH, redox, chlorine, bromine, peracetic acid, hydrogen peroxide and conductivity in aqueous solutions. Typical applications include the treatment of general water and liquid waste.

- Compact housing for installation on top hat rails
- Up to 10 measuring and control modules per power supply module

Measuring transmitter DULCOTEST® PHV1, RH V1, Pt 100 V1

- For pH, ORP and temperature
- Space-saving installation on the sensor
- Cost-effective measuring transducer without display and calibration function

Multi-Channel Measuring And Control System For Drinking Water And Swimming Pool Water Treatment



pk_5_057

The multi-channel measuring and control system DULCOMARIN® II provides overall control. It is the first bus system to provide effective networking of drinking water treatment and swimming pool facilities. A key feature of this system is its simple operation via a large illuminated colour display and it can also control up to 16 water systems or filtration circuits.

- Cost-effective thanks to standard integral screen writer/data logger
- An optional web server provides visualisation via a PC without the need for special software or it can be simply integrated into a visualisation program by means of an optional OPC®server
- Measurement and control of up to any three measured variables via a current input module for each water system/filtration circuit

8.0.2 Selection Guide DULCOMETER®

Single-channel controller Compact



P_DM_0025_SW1

Application	Measured variables	Functions
■ Waste water treatment ■ Treatment of drinking water	■ pH and redox (selectable) ■ Chlorine	■ Operation is language-independent ■ 1-way control ■ Metering pump control ■ 1 analog output (measured value/actuating variable) ■ Sensor monitoring for pH ■ Remote control input (Pause)

See page → 8-8

D1Cb single-channel controller



P_DM_0016_SW

Application	Measured variables	Functions
■ Waste water treatment ■ Cooling water treatment ■ Treatment of drinking water ■ Neutralisation	■ pH, redox, conductivity ■ chlorine, chlorine dioxide, chlorite, bromine ■ ozone, hydrogen peroxide, dissolved oxygen ■ peracetic acid, fluoride, temperature, mA in general	■ Menu-driven operation in 15 languages ■ 2-way control ■ Metering pump control ■ Alarm relay ■ 2 limit value relays ■ 1 analogue output (measured value/actuating variable) ■ Remote control input (Pause) ■ Sensor monitoring ■ Subsequent extension of functions via activation key

See page → 8-9

Single-channel controller D1Ca



Application	Measured variables	Functions
■ Waste water treatment ■ Cooling water treatment ■ Treatment of drinking water ■ Neutralisation	■ pH, redox, conductivity, ■ chlorine, chlorine dioxide, chlorite, bromine ■ ozone, hydrogen peroxide, dissolved oxygen ■ peracetic acid, fluoride, temperature, mA in general	■ Menu-driven operation in 15 languages ■ 2-way control ■ Metering pump control ■ Alarm relay ■ 2 limit value relays ■ 2 analogue outputs (measured value/actuating variable) ■ Disturbance variable processing (feed forward) ■ Remote control input (Pause)

See page → 8-13



pk_5_002

8.0 Overview Measuring And Control Technology

Two-channel controller D2Ca



Application	Measured variables	Functions
■ Waste water treatment ■ Cooling water treatment ■ Drinking water treatment ■ Neutralisation ■ Swimming pool water treatment	■ pH/ORP, pH/chlorine, pH/chlorine dioxide, ■ pH/pH, chlorine/chlorine	■ Menu-driven operation in 8 languages ■ 2 1-way controllers ■ Metering pump control ■ Alarm relay ■ 2 limit value relays ■ 2 analogue outputs (measured value/controller output)

See page → 8-30

Multi-Channel Controller DULCOMARIN® II and Disinfection Controller

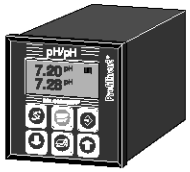

pk_5_015

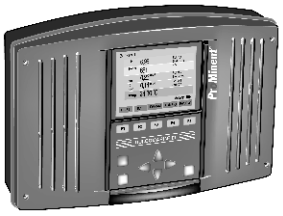

pk_5_045

Application	Measured variables	Functions
■ Swimming pool water treatment ■ Drinking water treatment ■ Water treatment in general	■ pH, ORP, free chlorine, total available chlorine, ■ combined chlorine, temperature. ■ Via mA: Turbidity, fluoride, ammonia, UV intensity, flow rate	■ Menu-driven operation in 6 languages ■ Large colour display ■ up to 16 filtration circuits / water systems ■ Integrated data logger/screen recorder: ■ Web server / OPC Server via LAN/Ethernet

See page → 8-33

Cool Control



Application	Measured variables	Functions
■ Cooling tower control	■ Conductivity (inductive and conductive)	■ Menu-driven operation in 6 languages ■ Control of 2 biocide pumps and 1 inhibitor ■ Forced desalination ■ Desalination lock

See page → 8-67



pk_5_006_1

8.0 Overview Measuring And Control Technology

ProMcon



P_DM_0018_SW

Application	Measured variables	Functions
■ Cooling tower control	■ Conductivity (conductive)	■ Menu-driven operation in 6 languages ■ Control of 2 biocide pumps and 1 inhibitor pump ■ pre-bleed ■ bleed lock-out ■ 2nd measured variable (pH, chlorine, or bromine) ■ Switching between summer/ winter

See page → 8-65

MultiFlex M10

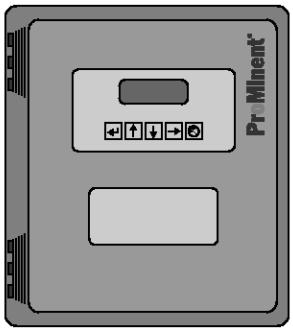

P_DM_0017_SW

Application	Measured variables	Functions
■ Cooling tower controller ■ Boiler control	■ Conductivity, pH, chlorine, bromine	■ Menu-driven operation ■ Control of up to 4 cooling towers ■ Control of 2 biocide pumps and 1 inhibitor pump per cooling tower ■ Pre-bleed ■ Desalination lock ■ Integrated web server for configuration ■ Optional modem ■ Optional operating and configuration software Trackster®

See page → 8-69

2-wire measuring transmitter DMTa

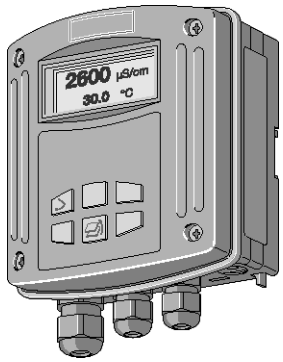

pk_5_001

Application	Measured variables	Functions
■ Chemical and process engineering ■ Food and beverages industry ■ Chemical industry ■ Pharmaceutical industry ■ Water treatment ■ Waste water treatment ■ Power plant engineering	■ pH, ORP, chlorine, temperature, ■ conductivity	■ Menu-driven operation in 6 languages ■ Sensor monitoring ■ Autoranging for conductivity ■ Switching within the measured variables pH, ORP, temperature, and chlorine

See page → 8-71

Single-channel transmitter/controller DULCOPAC

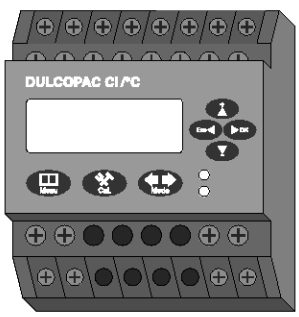

P_DM_0023_SW

Application	Measured variables	Functions
■ Waste water treatment ■ Treatment of drinking water	■ pH, ORP, chlorine, bromine, peracetic acid, hydrogen peroxide and conductivity	■ 2-way control ■ Metering pump control ■ 2 analogue outputs (measured value/actuating variable)

See page → 8-74

8.1 DULCOMETER® Measuring And Control Technology

8.1.1 DULCOMETER® Measuring And Control Units

DULCOMETER® measuring and control units combine maximum process safety with a broad application spectrum. Different measured variables can be accurately determined. Depending on the application, the control behaviour of the DULCOMETER® measuring and control units are adapted to fit the relevant application. Different designs facilitate a flexible use.

Advantages at a glance:

- high measuring reliability, e.g. thanks to symmetrical input for pH/ORP
- high measuring accuracy, e.g. thanks high-impedance input for pH/ORP
- minimum disturbance, e.g. thanks to alternating current disturbance suppression
- two-wire technology for disturbance-resistant measurement
- highly versatile thanks to many options as well as different designs

DULCOMETER® measuring and control units, DULCOTEST® sensors with ProMinent® metering pumps - the complete control cycle, measuring-controlling-metering and recording, everything from one single source, optimally matched.

Which controller for which purpose?

Function	Compact controller	D1Cb/ D1Cc	D1Ca	D2Ca
Measured variable				
pH	✔	✔	✔	✔
ORP	✔	✔	✔	✔
Chlorine	✔	✔	✔	✔
Chlorine dioxide		✔	✔	✔
Chlorite		✔	✔	
Bromine		✔	✔	
Conductivity, conductive			✔	
Conductivity, inductive			✔	
Conductivity via mA		✔		
Peracetic acid		✔	✔	
Hydrogen peroxide		✔	✔	
Ozone		✔	✔	
Dissolved oxygen		✔	✔	
Fluoride		✔	✔	
0/4 … 20 mA standard signal		✔	✔	
Temperature		✔	✔	
Voltage supply				
115 V~			✔	✔
230 V~			✔	✔
90-253V ~	✔	✔		
24 V -/~			✔	✔
Method of installation, Enclosure rating				
Wall mounting, IP 65		✔	✔	✔
Panel mounting,IP 54		✔	✔	✔
Combination housing (wall-mounting, installation on controls panel, pillar-mounting) IP 67	✔			
Measurement				
Number of measuring channels	**1**	**1**	**1**	**2**
Sensor monitoring	✔	✔		
Temperature compensation for pH	✔	✔	✔	✔
Temperature compensation for conductivity			✔	
pH compensation for chlorine			✔	
Control				
PID control	✔	✔	✔	✔
1-way control (e.g. with pH acid or alkali)	✔			✔

8.1 DULCOMETER® Measuring And Control Technology

Function	Compact controller	D1Cb/ D1Cc	D1Ca	D2Ca
2-way control (e.g. with pH acid and alkali)		✔	✔	
Control of metering pump by pulse frequency	✔	✔	✔	✔
Control of solenoid valve/motorised metering pump	✔	✔	✔	✔
Control of servo motor with feedback signal			✔	
Feedforward control of flow via mA			✔	
Feedforward control of flow via frequency (e.g. of contact water meter)		✔	✔	
Metering time monitoring with deactivation of the actuating variable	✔	✔	✔	✔
Limit value relay (for signalling infringements of limit values)	✔, 1	✔, 2	✔, 2	✔, 2
Timer relay (for time-dependent metering, optionally to limit value relay)		✔, 2	✔, 2	
Outputs				
Analogue output 0/4…20 mA	✔, 1	✔, 1	✔, 2	✔, 2
Special functions				
Subsequent extension of functions via activation key		✔		
Operating hour counter		✔		
Calibration timer		✔		
Calibration logbook		✔		

8.2 DULCOMETER® Single-channel Measuring and Control Unit, Compact for pH, Redox and Chlorine

8.2.1 DULCOMETER® Compact



P_DM_0025_SW1

NEW

The Measuring Transducer DULCOMETER® Compact with control function for the measured variables pH, redox and chlorine provides basic functions for applications in water treatment. It has a fixed configuration with the following features.

- Measured variables pH and ORP (can be changed on the controller)
- Operation independent of the operating language (use of abbreviations, such as CAL, PARAM, CONFIG, ERROR)
- Illuminated display
- 3 LED display operating state (relay 1 / 2 active, Error)
- Sensor monitoring for pH
- P and PID control characteristics
- Selectable control direction (raise or lower measured value)
- Pulse frequency relay for control of metering pump
- Power relay can be configured as an alarm, limit value or pulse width modulated control output for metering pumps (connection function or switch on operating voltage)
- Analog output 0/4…20 mA can be configured as a writer output or control output
- Digital input to switch off the control or to process a sample water limit contact by remote control
- Temperature sensor input (Pt 1000) for temperature compensation of the pH and chlorine value

Applications

- Waste water treatment
- Treatment of drinking water
- Swimming pool water treatment

Technical Data

Measurement range	pH: 0.00 ... 14 ORP: -1000 ... +1000 mV Chlor: 0,05 ... 5 ppm
Resolution	pH: 0.01 pH ORP: 1 mV Chlor: 0,01 ppm
Correction variable	Temperature for pH via Pt 1000
Correction range	0 … 120 °C
Control characteristic	P/PID-Regelung
Control	1-way controller with selectable control direction (raise/lower)
Signal current output	1 x 0/4-20 mA galvanically isolated max. load 400 Ω Range and assignment (measured or actuating variable) can be set
Control outputs	1 pulse frequency output for control of the metering pump 1 relay (alarm or limit value relay or pulse length control) 1 x analogue output 0/4…20 mA
Electrical connection	90 - 253 V ~
Ambient temperature	-10 ... +60 °C
Enclosure rating	IP 67
Dimensions	135 x 125 x 75 mm (H x W x D)
Weight	0.5 kg

	Order no.
Compact controller for pH/ORP	1035638
Compact controller for chlorine	1038546

Compact Chlorine Controller available from 2nd quarter of 2011.

Accessories

	Order no.
Cable combination coax 0.8 m - pre-assembled*	1024105
Cable combination coax 2 m- SN6 - pre-assembled*	1024106
Cable combination coax 5 m- SN6 - pre-assembled*	1024107
Montageset Schaltschrankeinbau	1037273
Chlorine sensor CLB 2-µA-5 ppm	1038902

8.3 DULCOMETER® Single-channel Measuring and Control Unit, D1Cb/c, for all Measured Variables

8.3.1 Single-channel Controller, Type D1Cb/D1Cc, for all Measured Variables

- Flexible extendability thanks to subsequent activation option for functions via activation code (see D1Ub Upgrade Identcode Chap. 8.3.3)
- Equipped for the most important basic requirements in water treatment
- Large, illuminated graphic display
- Operator-guided via plain text menu in 14 languages integrated in the controller
- Automatic buffer detection for pH

Standard configuration

The following functions are included in the D1Cb/D1Cc controller (the measured variables depend on the type of connection of the measured variable)

- All 23 operator languages in the memory
- Connection type mV: Capable of being switched between pH and redox
- Standard signal connection type: all 8 amperometric parameters, such as chlorine, chlorine dioxide, chlorite etc and pH, redox and conductivity via mA in the memory
- 2 power relays for limit monitoring or timer functions
- Metering time monitor with deactivation of the actuating variable
- Extended range voltage supply: 90-253 V, 50/60 Hz
- mA sensor input protected against short-circuit and polarisation reversal

- Wall-mounted installation: D1Cb
- Panel-mounted installation: D1Cc

Applications

- Waste water treatment
- Cooling water treatment
- Treatment of drinking water
- Neutralisation

8.3 DULCOMETER® Single-channel Measuring and Control Unit, D1Cb/c, for all Measured Variables



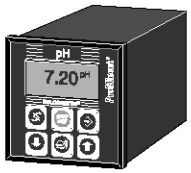

pk_5_002

Technical Data

Measurement range	Type of connection mV: pH 0.00 … 14.00 ORP - 1000 … +1000 mV Type of connection mA: Chlorine: 0.00...0.500/2.00/5.00/10.0/20.0/50.0/100.0 ppm Chlorine dioxide: 0.00...0.500/2.00/10.0/20.0 ppm Chlorite: 0.02...0.50/0.1...2 ppm Bromine: 0.02...2.0/0.1...10.0 ppm Ozone: 0.00...2,00 ppm Hydrogen peroxide, sensor PER1: 2.0...200.0/20...2,000 ppm Hydrogen peroxide, sensor PEROX: 0...20/200/2,000 ppm, 1 vol.% Peracetic acid: 1...20/10...200/100...2,000 mg/l Dissolved oxygen: 0.1...10/0.1...20 ppm pH: 0.00...14.00 ORP: 0...+1.000 mV Conductivity: 0...20/200/1,000 mS/cm Temperature: 0...100°C
Resolution	pH: 0.01 pH ORP: 1 mV Amperometric (e. g. chlorine): 0.001/0.01 ppm, 0.01 vol. %
Accuracy	0.5 % of measuring range
Measurement input	SN6 (input resistance > 0.5 x 10^{12} Ω)
Correction variable	Temperature via Pt 100/Pt 1000
Correction range	0 … 100 °C
Disturbance signals	-
Control characteristic	P/PID control
Control	2-way control
Signal current output	1 x 0/4-20 mA galvanically isolated max. load 450 Ω Adjustable range and allocation (measured variable, correction variable, controlled variable)
Control outputs	2 pulse frequency outputs for metering pump actuation 2 relays (limit value or pulse length) 1 x 0/4 ... 20 mA
Alarm relay	250 V ~ 3 A, 700 VA changeover contact
Electrical connection	90 - 253 V, 50/60 Hz
Ambient temperature	Wall mounting: -5 … 50 °C
Enclosure rating	Wall mounting: IP 65 Control panel version: IP 54
Dimensions	Wall mounting: 198 x 200 x 76 mm (WxHxD) Control panel version: 96 x 96 x 145 mm (BxHxT) (D1Cc)

	Order no.
Mounting kit for control panel installation	792908

A complete measurement station comes with:

- Measuring transducer/controller D1Cb/D1Cc (see Identcode)
- Fitting: DGMa..., DLG III ..., immersed fitting
- pH sensor (corresponding to Identcode)
- ORP sensor (corresponding to Identcode)
- Chlorine, chlorine dioxide, chlorite, bromine, dissolved oxygen sensor
- Transducer for pH or ORP (corresponding to Identcode)
- Sensor cable

Accessories

	Order no.
Cable combination coax 0.8 m - pre-assembled*	1024105
Cable combination coax 2 m- SN6 - pre-assembled*	1024106
Cable combination coax 5 m- SN6 - pre-assembled*	1024107
SN6 connection, refitting	1036885

* for measured variable connection = 5

8.3 DULCOMETER® Single-channel Measuring and Control Unit, D1Cb/c, for all Measured Variables

8.3.2 Identcode Ordering System D1Cb/D1Cc, for all Measured Variables

DULCOMETER® Control Series D1Cb/D1Cc

D1Cb/ D1Cc	Installation																			
	W	Wall mounting (IP 65) (D1Cb)													D	Panel mounting (IP 54) (D1Cc)				
		Version																		
		00	With ProMinent logo																	
			Power supply																	
			4	24 V AC/DC only D1Cc											6	90...253 V, 48/63 Hz (wide-range power supply)				
				Approvals																
				01	CE approval															
					Hardware add-on I															
					0	None														
						Hardware add-on II														
						0	none								1	RC protection for power relays (only D1Cb)				
							External connection													
							0	None												
								Software defaults												
								U	Software default setting (all of the following selection options are automatically set to the default setting)										
								V	Software pre-set (the following selection options must be evaluated)										
									Measured variable presetting										
									0	universal				P	pH				
									A	Peracetic acid				R	ORP				
									B	Bromine				S	0/4...20 mA Standard signal, general				
									C	Chlorine				T	Temperature				
									D	Chlorine dioxide				X	Dissolved oxygen				
									F	Fluoride				Z	Ozone				
									H	Hydrogen peroxide				L	conductivity				
									I	Chlorite									
										Measured variable connection									
										1	Standard signal 0/4-20 mA, all measured variables								
										2	SN6 plug (mounting type "W" only)								
										5	mV input for pH/ORP via terminal								
											Correction variable								
											0	None							
											2	Temperature Pt 100/1000 via terminal (for pH and conductivity)							
											4	Manual temperature entry (for pH and conductivity)							
												Control input							
												0	None	1	Pause				
													Signal output						
													0	None	1	1 Analogue signal output 0/4...20 mA			
														Relay control					
														G	Alarm and 2 limit value relays or 2 timer relays				
														M	Alarm and 2 solenoid valve relays or 2 timer relays				
															Pump control				
															0	None			
															2	2 pumps via pulse frequency			
																Control characteristic			
																0	None		
																1	P-control		
																2	PID control		
																	Language		
																	00	no default	
																	DE	German	
																	EN	English	
																	ES	Spanish	
																	SV	Swedish	
																	PT	Portuguese	
																	CN	Chinese	
																	FR	French	
																	CZ	Czech	
																	JP	Japanese	
																	KR	Korean	
																	NO	Norwegian	
																	NL	Dutch	
																	PL	Polish	
																	RU	Russian	
																	TH	Thai	
																	HU	Hungarian	
																	IT	Italian	
																	DK	Danish	
																	FI	Finish	
																	GR	Greek	
																	NO	Norwegian	

8.3 DULCOMETER® Single-channel Measuring and Control Unit, D1Cb/c, for all Measured Variables

If software default settings **U** = software default setting is selected, the measured variables pH or redox can be selected during commissioning. The menu language is automatically requested.

The connection of the measured variable is 5 = mV input for pH/redox via shield clamp.

With all other options, the default settings (first option) are selected.

The controller with software with default settings can also be ordered with an order number.

	Order no.
Controller in default setting D1CbW00601000U05000G0000	1036423

Subsequent activation of functions is possible any time using an activation code.

This activation code can only be used with the controller with the specified serial number. The activation code can be provided by phone, by fax or by e-mail and can be simply entered into the control keyboard. The new function is then available and need only be enabled and parametrised.

The following information is essential to obtain the activation code:

- Serial number of the controller (refer to nameplate or operator menu under "General Settings and Information")
- Current identcode of the controller (refer to operator menu under "General Settings and Information"
- Required identcode

8.3.3 Identcode Ordering System for D1Ub, Subsequent Function Extension For D1Cb/D1Cc

DULCOMETER® D1Cb/D1Cc Software Upgrade

D1Ub	**Software defaults**										
		Software pre-set									
		Default - measured variable									
		0	Universal						P	pH	
		A	PES						R	ORP	
		B	Bromine						S	0/4-20 mA standard signal, general	
		C	Chlorine						T	Temperature	
		D	Chlorine dioxide						X	O_2	
		F	Fluoride						Z	O_3	
		H	H_2O_2						L	Conductivity	
		I	Chlorite								
			Connection of measured variable								
			1	Standard signal 0/4-20 mA, all measured variables							
			5	mV input for ph/ORP via terminal							
				Correction variable							
				0	none						
				2	Temperature Pt100 via terminal (for pH and conductivity)						
				4	Manual temperature entry (for pH and conductivity)						
					Control input						
					0	none					
					1	Pause					
						Signal output					
						0	none				
						1	1 analogue signal output 0/4-20 mA				
							Power control				
							G	Alarm and 2 limit value relays or 2 timer relays			
							M	Alarm and 2 solenoid valve relays or 2 timer relays			
								Pump control			
								0	none		
								2	2 pumps via pulse frequency		
									Control modes		
									0	none	
									1	P controlling	
									2	PID controlling	
										Language	
										00	no default

8.4 DULCOMETER® Single-Channel Measuring And Control Unit, Type D1Ca

D1Ca transmitters/controllers are only available in identcode versions not possible with the D1Cb.

The advantages of the D1Cb are as follows:

- **Familiar operation: operation is identical to that of the D1Ca**
- **Versatility of menu languages: all listed languages are available in the transducer/control and can be selected manually**
- **Flexibility with selection of the measured variable: option to switch between pH and ORP and within the variables using the mA connection**
- **Flexibility of voltage supply: international due to wide range power unit**

Our sales team will be pleased to assist you with any queries you may have.

8.4.1 Measured Variables, pH And ORP Single Channel Controller, Type D1Ca

- A range of fully expanded options means optimised adaptation to process requirements
- Large clear graphic display of measurement and correction signals
- Full text user guidance
- Automatic buffer recognition
- Monitors limit values as standard and limits dosing times
- Disturbance free two-wire sensor connector
- 2 electrically isolated 0/4-20 mA signal outputs
- A range of wall and control panel mounted versions
- 2 timers on limit valve relays

Applications:

- waste water treatment
- cooling water treatment
- potable water treatment
- neutralisation
- process control in the chemical industry, food industry, paper manufacture, pharmaceutical industry
- ...



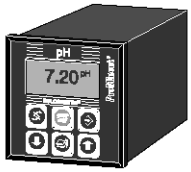

pk_5_002

Technical Data

Measurement range	pH 0.00…14.00 ORP - 1000…+1000 mV
Resolution	pH 0.01/1 mV
Accuracy	0.5 % from measurement value
Measurement input	SN6 (Input resistance > 10^{12} Ω) Terminal mV (Input resistance > 5 x 10^{11} Ω) Terminal - standard signal 0/4...20 mA
Correction variable	Temperature via Pt 100 (pH version only)
Correction range	0 … 100 °C
Disturbance signals	additional/multiplicative
Control characteristic	P/PID control
Control	2-way control
Signal current output	2 x electrically isolated 0/4-20 mA max. load 450 Ω (400 Ω 2nd output) Adjustable range and direction (measurement, correction and control variable)
Control outputs	2 reed contacts (pulse rate, for pump control) 2 relays (pulse length, 3P or limit value, timer) 2 x 0/4...20 mA
Alarm relay	250 V ~3 A, 700 VA changeover contact
Electrical connection	24 V ~=/100 V~/115 V~/200 V~/230 V~ ±10 %
Ambient temperature	Control panel version: 0…50 °C (0…45 °C with fully expanded units) Wall mounted: -5…50 °C (-5…40 °C with fully expanded units)
Enclosure rating	Control panel version: IP 54 Wall mounted: IP 65
Dimensions	Control panel version: 96 x 96 x 140 mm (WxHxD) Wall mounted: 198 x 200 x 76 mm (WxHxD)

	Order no.
Mounting kit for control panel installation	792908

8.4 DULCOMETER® Single-Channel Measuring And Control Unit, Type D1Ca

A complete measuring station comprises the following:

- D1Ca measuring transducer /controller (see Identcode)
- In-line probe housing: DGMa..., DLG III ..., immersible in-line probe housing
- pH sensor (dependent on Identcode)
- ORP sensor (dependent on Identcode)
- Transducer for pH and/or ORP (dependent on Identcode)
- Sensor cable

(for further informations: Immersion Probe Fittings see p. → 7-71; pH Sensors With SN6 Or Vario Pin see p. → 7-11; ORP Sensors With Fixed Cable see p. → 7-23; Measurement Transducer 4...20 mA (Two Wire) see p. → 8-81; Sensor Accessories see p. → 7-62)

8.4.2 Identcode Ordering System For pH And ORP Single Channel Controller

DULCOMETER® Controller D1Ca Series

D1Ca	Installation												
	D	Control panel version 96 x 96 mm (IP 54)											
	W	Wall mounted (IP 65)											
		Power supply											
		0	230 V, 50/60 Hz							3	100 V, 50/60 Hz (control panel version only)		
		1	115 V, 50/60 Hz							4	24 V, AC/DC		
		2	200 V, 50/60 Hz (control panel version only)										
			Measured variable										
			P	pH 0–14									
			R	ORP - 1000…+1000 mV									
				Measured variable connection									
				1	0/4-20 mA standard signal terminal (signal transmitter see chapter 7.5.1)								
				2	SN6 plug								
				5	mV terminal								
					Correction variable (temperature)								
					0	None							
					2	Temperature for P, via terminal (Pt 100)							
					3	Temperature for P, via 0/4-20 mA standard signal (signal transmitter see chapter 7.5.1)							
					4	Manual temperature input for P							
						Disturbance variable							
						0	None			2	Flow as frequency 0-500Hz		
						1	Flow as 0/4-20 mA standard signal			3	Flow as frequency 0-10 Hz		
							Control input						
							0	None		1	Pause		
								Signal output					
								0	None				
								1	0/4-20 mA measured value				
								2	0/4-20 mA control variable				
								3	0/4-20 mA correction variable				
								4	2 programmable 0/4-20 mA standard signal outputs				
									Relay control				
									G	Alarm, timer relay and 2 limit values relay			
									M	Alarm and 2 solenoid valve relay (pulse length control)			
									R	Alarm relay and servo motor with feedback signal (3P)			
										Pump control			
										0	None	2	2 pumps
											Control characteristic		
											0	None	1 Proportional control
													2 PID control
												Protocol output	
												0	None
													Language
													A Swedish (E, P, U)
													B Portuguese (E, F, S)
													C Chinese (E)
													D German (E, F, N)
													E English (D, F, N)
													F French (D, E, N)
													G Czech (D, E, J)
													I Italian (D, E, S)
													U Hungarian (A, E, P)
													T Thai (E)
													S Spanish (B, E, F)
													R Russian (E, P, G)
													P Polish (A, E, U)
													N Dutch (D, E, F)
													K Korean (E)

8.4 DULCOMETER® Single-Channel Measuring And Control Unit, Type D1Ca

D1Ca transmitters/controllers are only available in identcode versions not possible with the D1Cb.

The advantages of the D1Cb are as follows:

- **Familiar operation: operation is identical to that of the D1Ca**
- **Versatility of menu languages: all listed languages are available in the transducer/control and can be selected manually**
- **Flexibility with selection of the measured variable: option to switch between pH and ORP and within the variables using the mA connection**
- **Flexibility of voltage supply: international due to wide range power unit**

Our sales team will be pleased to assist you with any queries you may have.

8.4.3 Measured Variables Chlorine, Chlorine Dioxide, Chlorite, Bromine, Ozone, Dissolved Oxygen, Single-Channel Controller, Type D1Ca

- A range of fully expanded options means optimised adaptation to process requirements
- Large clear graphic display of measured and correction variable
- Full text user guidance
- Monitors limit values as standard and limits dosing times
- Disturbance free 2-wire probe connector
- 2 electrically isolated 0/4-20 mA signal outputs
- A range of wall and panel mounted versions
- 2 timers on limit valve relays

Applications:

- drinking water treatment
- cooling water treatment
- potable water treatment
- process control (disinfection) in the chemical industry, food industry, paper manufacture, pharmaceutical industry ...

Technical Data





pk_5_004

Measurement range	Cl_2: 0.00...0.500/2.00/5.00/10.0/20.0/50.0/100.0 ppm ClO_2: 0.00...0.500/2.00/10.0/20.0 ppm Br_2: 0.02...2.00/0.1...10.0 ppm O_3: 0.00...2.00 ppm Dissolved oxygen 0.1...10/0.1...20 ppm Chlorite: 0.02...0.50/0.1...2 ppm
Resolution	0.001/0.01 ppm/l/0.1 %
Accuracy	0.5 % from measurement range
Measurement input	Standard signal terminal 0/4...20 mA
Correction variable	pH (Cl_2 version only) Temperature via Pt 100 (only for ClO_2 CDP sensor)
Correction range temp.	10 … 45 °C (only for ClO_2)
Correction range pH	7.0 … 8.5 pH (only for Cl_2)
Disturbance signals	Additive/multiplicative
Control characteristic	P/PID control
Control	2-way control
Signal current output	2 x electrically isolated 0/4-20 mA max. load 600 Ω (400 Ω 2nd output) Adjustable range and direction (measured, correction and control variable)
Control outputs	2 reed contacts (pulse rate, for pump control) 2 relays (pulse length, 3P or limit value) 2 x 0/4...20 mA
Alarm relay	250 V ~ 3 A, 700 VA changeover contact
Electrical connection	24 V ~=/100 V~/115 V~/200 V~/230 V~ ±10 %
Ambient temperature	Control panel version 0…50 °C (0…45 °C with fully expanded units) Wall mounted: -5…50 °C (-5…40 °C with fully expanded units)
Enclosure rating	Control panel installation: IP 54 Wall mounting: IP 65
Dimensions	Control panel version: 96 x 96 x 140 mm (WxHxD) Wall mounted: 189 x 200 x 76 mm (WxHxD)

8.4 DULCOMETER® Single-Channel Measuring And Control Unit, Type D1Ca

	Order no.
Mounting kit for control panel installation	792908

A complete measuring station comprises the following:

- D1Ca measuring transducer /controller (see Identcode)
- In line probe housing: DGMa..., DLG III ...,
- Chlorine, chlorine dioxide, chlorite-, bromine-, dissolved oxygen sensor
- Sensor cable

(for further informations: Probe Fittings see p. → 7-68; DULCOTEST® Amperometric Sensors see p. → 7-26; Sensor Accessories see p. → 7-62)

8.4 DULCOMETER® Single-Channel Measuring And Control Unit, Type D1Ca

8.4.4 Identcode Ordering System Cl_2, ClO_2, O_3, Br_2, Dissolved Oxygen Single Channel Controller

DULCOMETER® Controller D1Ca Series

D1Ca	Installation													
	D	Control panel version 96 x 96 mm (IP 54)												
	W	Wall mounted (IP 65)												
		Power supply												
		0	230 V, 50/60 Hz											
		1	115 V, 50/60 Hz											
		2	200 V, 50/60 Hz (control panel version only)											
		3	100 V, 50/60 Hz (control panel version only)											
		4	24 V, AC/DC											
			Measured variable											
			B	Bromine (0-10 ppm)										
			C	Chlorine (0-0.5/2/5/10/20/50/100 ppm)										
			D	Chlorine dioxide (0-0.5/2/10/20 ppm)										
			I	Chlorite (0-0.5/2 ppm)										
			X	Dissolved oxygen (0.1-10/20 ppm)										
			Z	Ozone (0-2 ppm)										
				Measured variable connection										
				1	0/4-20 mA standard signal terminal									
					Correction variable (temperature)									
					0	None								
					1	pH for chlorine via standard signal (0/4-20 mA)								
					2	Temperature via terminal (Pt 100) only for ClO_2 with CDP 1 sensor								
					3	Temperature via standard signal 0/4-20 mA only for ClO_2 with CDP 1 sensor								
					4	Manual temperature entry with CDP 1 sensor								
						Disturbance variable								
						0	None							
						1	Flow as 0/4-20 mA standard signal							
						2	Flow as frequency 0-500 Hz							
						3	Flow as frequency 0-10 Hz							
							Control input							
							0	None						
							1	Pause						
								Signal output						
								0	None					
								1	0/4-20 mA measured value					
								2	0/4-20 mA control variable					
								3	0/4-20 mA correction variable					
								4	2 programmable standard 0/4-20 mA signal outputs					
									Relay control					
									G	Alarm, timer and 2 limit values relay				
									M	Alarm and 2 solenoid valve relay (pulse length conrol)				
									R	Alarm relay and servo motor with feedback signal (3P)				
										Pump control				
										0	None			
										2	2 pumps			
											Control characteristic			
											0	None		
											1	Proportional control		
											2	PID control		
												Protocol output		
												0	None	
													Language	
													A	Swedish (E, P, U)
													B	Portuguese (E, F, S)
													C	Chinese (E)
													D	German (E, F, N)
													E	English (D, F, N)
													F	French (D, E, N)
													G	Czech (D, E, J)
													I	Italian (D, E, S)
													U	Hungarian (A, E, P)
													T	Thai (E)
													S	Spanish (B, E, F)
													R	Russian* (E, P, G)
													P	Polish (A, E, U)
													N	Dutch (D, E, F)
													K	Korean (E)

* not for measured values: D, Z, X und I

8.4 DULCOMETER® Single-Channel Measuring And Control Unit, Type D1Ca

D1Ca transmitters/controllers are only available in identcode versions not possible with the D1Cb.

The advantages of the D1Cb are as follows:

- **Familiar operation: operation is identical to that of the D1Ca**
- **Versatility of menu languages: all listed languages are available in the transducer/control and can be selected manually**
- **Flexibility with selection of the measured variable: option to switch between pH and ORP and within the variables using the mA connection**
- **Flexibility of voltage supply: international due to wide range power unit**

Our sales team will be pleased to assist you with any queries you may have.

8.4.5 Measured Variable, Conductivity Single Channel Controller, Type D1Ca

- A range of fully expanded elements means optimised adaptation to process requirements
- Large clear graphic display of measured and correction variable
- Full text user guidance
- 2 parameter sets for inductive conductivity
- Connectors for 2 and 4 electrode measuring cells or inductive measuring cells
- Monitors limit values as standard and limits dosing times
- Disturbance free 2-wire probe connector
- 2 electrically isolated 0/4-20 mA signal outputs
- A range of wall and control panel mounted versions

Applications:

- cooling water treatment
- reverse osmosis
- ion exchange
- process control in the chemical industry, food industry, paper manufacture, pharmaceutical industry…

Technical Data



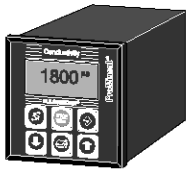

pk_5_006

Measurement range	0…20/200/2000 µS/cm, 0…20/200 mS/cm measured variable L3 0…20/50/200/500/2000/5000 µS/cm, 0…20/200/1000 mS/cm measured variable L1 0…200/0…2000 µS/cm, 0…20/200/2000 mS/cm measured variable L6
Cell constant	0.006…12.0 (dependant on measurement range)
Resolution	0.0625 % of input range
Accuracy	0.5 % from measurement range
Measurement frequency	56 Hz … 2.7 kHz
Measurement input	L1: Terminal standard signal 0/4...20 mA (inductive or conductive sensor with transmitter) L3: Terminal (conductive 2-electrode and 4-electrode sensors) L6: Terminal, inductive with ICT 1 or ICT 2 sensors
Correction variable	Temperature via Pt 100
Correction range	0 … 100 °C
Control characteristic	P/PID control
Control	bidirectional control
Signal current output	2 x electrically isolated 0/4-20 mA max. load 600 Ω (400 Ω 2nd output) Adjustable measured, correction and control variable
Control outputs	2 reed contacts (pulse rate, for pump control) 2 relays (pulse length, 3P or limit values with open/close time delay) 2 x 0/4...20 mA
Alarm relay	250 V ~ 3 A, 700 VA changeover contact
Electrical connection	24 V ~=/100 V~/115 V~/200 V~/230 V~ ±10 %
Ambient temperature	Control panel version: 0…50 °C (0…45 °C with fully expanded unit) Wall mounted: -5…50 °C (-5…40 °C with fully expanded unit)
Enclosure rating	Control panel installation: IP 54 Wall mounting: IP 65
Dimensions	Control panel version: 96 x 96 x 140 mm (WxHxD) Wall mounted: 189 x 200 x 76 mm (WxHxD)

8.4 DULCOMETER® Single-Channel Measuring And Control Unit, Type D1Ca

	Order no.
Mounting kit for control panel installation	792908

A complete measuring station comprises the following:

- D1Ca measuring transducer /controller (see Identcode)
- In-line probe housing: DGMa..., DLG III ..., immersible in-line probe housing
- Conductivity sensor
- Sensor cable

(for further informations: Immersion Probe Fittings see p. → 7-71; DULCOTEST® Conductivity Sensors see p. → 7-48; Sensor Accessories see p. → 7-62)

8.4 DULCOMETER® Single-Channel Measuring And Control Unit, Type D1Ca

8.4.6 Identcode Ordering System For Conductivity Single Channel Controller

DULCOMETER® Controller D1Ca Series

D1Ca	Installation													
	D	Control panel version 96 x 96 mm (IP 54)												
	W	Wall mounted (IP 54)												
		Power supply												
		0	230 V, 50/60 Hz											
		1	115 V, 50/60 Hz											
		2	200 V, 50/60 Hz (control panel version only)											
		3	100 V, 50/60 Hz (control panel version only)											
		4	24 V, AC/DC											
			Measured variable											
			L	Conductivity										
				Measured variable connection										
				1	Terminal, standard signal 0/4-20 mA e.g. conductivity transmitter									
				3	Conductive conductivity sensor terminal									
				6	Terminal inductive conductivity sensors									
					Correction variable (temperature)									
					0	None								
					2	Temperature via terminal (Pt 100 of LF measuring sensor LFT, LMP, ICT)								
					3	Temperature via 0/4-20 mA standard signal								
					4	Manual temperature input								
						Disturbance variable								
						0	None							
						1	Flow as 0/20 mA standard signal							
						2	Flow as frequency 0-500 Hz							
						3	Flow as frequency 0-10 Hz							
						4	Flow as 0/4-20 mA, standard signal, parameter set switching (Limits)*							
						5	Parameter set switching (Limits)*							
							Control input							
							0	None						
							1	Pause						
								Signal output						
								0	None					
								1	0/4-20 mA measured value					
								2	0/4-20 mA control variable					
								3	0/4-20 mA correction variable					
								4	2 programmable standard 0/4-20 mA signal outputs					
									Relay control					
									G	Alarm, timer and 2 limit values relay				
									M	Alarm and 2 solenoid valve relay (pulse length control)				
									R	Alarm relay and servo motor with feedback signal (3P)				
										Pump control				
										0	None			
										2	2 pumps			
											Control characteristic			
											0	None		
											1	Proportional control		
											2	PID control		
												Protocol output		
												0	None	
													Language	
													A	Swedish (E, P, U)
													B	Portuguese (E, F, S)
													C	Chinese (E)
													D	German (E, F, N)
													E	English (D, F, N)
													F	French (D, E, N)
													G	Czech (D, E, J)
													I	Italian (D, E, S)
													U	Hungarian (A, E, P)
													T	Thai (E)
													S	Spanish (B, E, F)
													P	Polish (A, E, U)
													N	Dutch (D, E, F)
													K	Korean (E)

* only for measured variable L6

8.4 DULCOMETER® Single-Channel Measuring And Control Unit, Type D1Ca

D1Ca transmitters/controllers are only available in identcode versions not possible with the D1Cb.

The advantages of the D1Cb are as follows:

- **Familiar operation: operation is identical to that of the D1Ca**
- **Versatility of menu languages: all listed languages are available in the transducer/control and can be selected manually**
- **Flexibility with selection of the measured variable: option to switch between pH and ORP and within the variables using the mA connection**
- **Flexibility of voltage supply: international due to wide range power unit**

Our sales team will be pleased to assist you with any queries you may have.

8.4.7 Measured Variable, Temperature, Standard Signal Single Channel Controller, Type D1Ca

- A range of fully expanded elements means optimised adaptation to process requirements
- Large clear graphic display of measured variable
- Pressure, flow, liquid level, turbidity, humidity units (mA-devices)
- full text user guidance
- Monitors limit values as standard and limits dosing times
- Probes connected via disturbance resistant two-wire connector
- 2 electrically isolated 0/4-20 mA signal outputs
- A range of wall and control panel mounted versions
- 2 timers on limit value relays

Applications:

- process control in the chemical industry
- food industry
- paper manufacture
- pharmaceutical industry...





pk_5_008

Technical Data

Measurement range	Temp. 0 … 100 °C/32-212 °F Standard 0/4 … 20 mA signal
Resolution	0.1 °C/0,1 °F/0.01 mA
Accuracy	0.5 % from measurement range
Measurement input	Pt 100 temperature terminal 0/4- 20 mA standard signal terminal
Disturbance signals	Additive/multiplicative
Control characteristic	P/PID control
Control	Bidirectional control
Signal current output	2 x electrically isolated 0/4-20 mA max. load 600 Ω (400 Ω 2nd output) Adjustable measured, correction and control variables
Control outputs	2 reed contacts (pulse rate, for pump control) 2 relays (pulse length, 3P or limit value with open/close delay) 2 x 0/4...20 mA
Alarm relay	250 V ~3 A, 700 VA changeover contact
Electrical connection	24 V ~=/100 V~/115 V~/200 V~/230 V~
Ambient temperature	Control panel version: 0…50 °C (0…45 °C if fully expanded unit) Wall mounted: -5…50 °C (-5…40 °C if fully expanded unit)
Enclosure rating	Control panel version: IP 54 Wall mounted: IP 65
Dimensions	Control panel version: 96 x 96 x 140 mm (WxHxD) Wall mounted: 189 x 200 x 76 mm (WxHxD)

	Order no.
Mounting kit for control panel installation	792908

8.4 DULCOMETER® Single-Channel Measuring And Control Unit, Type D1Ca

A complete measuring station comprises the following:

- D1Ca measuring transducer /controller (see Identcode)
- In-line probe housing: DGMa..., DLG III ..., immersible in-line probe housing
- Pt 100 temperature sensor or on-site standard signal
- Sensor cable

(for further informations: Immersion Probe Fittings see p. → 7-71; Temperature Sensors see p. → 7-25; Sensor Accessories see p. → 7-62)

8.4.8 Identcode Ordering System For Temperature, Standard Signal Single Channel Controller

DULCOMETER® Controller D1Ca Series

D1Ca	Installation												
	D	Control panel version 96 x 96 mm (IP 54)											
	W	Wall mounted (IP 54)											
		Power supply											
		0	230 V, 50/60Hz										
		1	115 V, 50/60 Hz										
		2	200 V, 50/60 Hz (control panel version only)										
		3	100 V, 50/60 Hz (control panel version only)										
		4	24 V, AC/DC										
			Measured variable										
			S	Standard signal (0/4-20 mA)									
			T	Temperature (0-100 °C)									
				Measured variable connection									
				1	0/4-20 mA standard signal terminal								
				4	Pt100 terminal for temperature								
					Correction variable (temperature)								
					0	None							
						Disturbance variable							
						0	None						
						1	Flow as 0/4-20 mA standard signal						
						2	Flow as frequency 0-500 Hz						
						3	Flow as frequency 0-10 Hz						
							Control input						
							0	None					
							1	Pause					
								Signal output					
								0	None				
								1	0/4-20 mA measured value				
								2	0/4-20 mA control variable				
								3	0/4-20 mA correction variable				
								4	2 programmable 0/4-20 mA standard signal outputs				
									Relay control				
									G	Alarm, timer and 2 limit values relay			
									M	Alarm and 2 solenoid valve relay (pulse length control)			
									R	Alarm relay and servo motor with feedback signal (3P)			
										Pump control			
										0	None		
										2	2 pumps		
											Control characteristic		
											0	None	
											1	Proportional control	
											2	PID control	
												Protocol output	
												0	None
													Language
													A Swedish (E, P, U)
													B Portuguese (E, F, S)
													C Chinese (E)
													D German (E, F, N)
													E English (D, F, N)
													F French (D, E, N)
													G Czech (D, E, J)
													I Italian (D, E, S)
													U Hungarian (A, E, P)
													T Thai (E)
													S Spanish (B, E, F)
													P Polish (A, E, U)
													N Dutch (D, E, F)
													K Korean (E)

8.4 DULCOMETER® Single-Channel Measuring And Control Unit, Type D1Ca

D1Ca transmitters/controllers are only available in identcode versions not possible with the D1Cb.

The advantages of the D1Cb are as follows:

- **Familiar operation: operation is identical to that of the D1Ca**
- **Versatility of menu languages: all listed languages are available in the transducer/control and can be selected manually**
- **Flexibility with selection of the measured variable: option to switch between pH and ORP and within the variables using the mA connection**
- **Flexibility of voltage supply: international due to wide range power unit**

Our sales team will be pleased to assist you with any queries you may have.

8.4.9 Measured Variable H_2O_2 And Peracetic Acid Single-Channel Controller, Type D1Ca



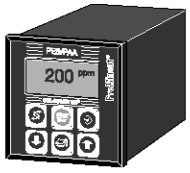

pk_5_010

- Optimised adaptation to process requirements through different expansion levels
- Large, easy-to-read graphic display for measured variables
- Plain text user guidance
- Limit value monitoring as standard and dosing time limit
- Interference immunity through 2-wire probe connection
- 2 electrically-isolated 0/4...20 mA signal outputs
- Various versions for wall and control panel mounting
- 2 timers for limit value relay

H_2O_2 applications:

- Chemical bleaching in the timber, paper, textile and mineral salt industries
- Organic synthesis in the chemical, pharmaceutical and cosmetics industries
- Oxidation of drinking water, landfill seepage water, contaminated ground water
- Disinfection of cooling water, service water and production water in the pharmaceutical and food and beverages industries, and in swimming pools
- Desodorisation (gas scrubber) in municipal and industrial wastewater purification plants
- Dechlorination in chemical processes

Peracetic acid applications:

- Disinfectant in the food and beverages sector
- Disinfectant in the cosmetics, pharmaceutical and medicine sectors
- CIP processes

The measurement can even be used where surfactants (tensides) are present.

The H_2O_2 sensors are selected using the decision table in Chap. "Sensor for hydrogen peroxide"

Technical Data

Hydrogen peroxide H_2O_2:

Sensor type	PER 1	PEROX
Ranges	2.0…200.0 mg/l 20…2,000 mg/l different sensors	1…20/10…200/100…2,000 mg/l selectable

Peracetic acid applications:

Sensor type	PAA 1
Range	0…20/200/2,000 mg/l 0…1 Vol. % different sensors

Additional technical data on the sensors: Sensor for hydrogen peroxide see p. → 7-46; Sensor For Peracetic Acid see p. → 7-45

8.4 DULCOMETER® Single-Channel Measuring And Control Unit, Type D1Ca

Resolution	0.01 ppm
Accuracy	0.5 % of range
Measurement input	0/4 ... 20 mA standard signal terminal
Disturbance signals	Additive/multiplicative
Control characteristic	P/PID control
Control	Bidirectional control
Signal current output	2 x 0/4-20 mA electrically isolated max. load 600 Ω (400 Ω 2nd output) adjustable measured variable range
Control outputs	2 reed contacts (pulse frequency for pump control) 2 relays (pulse length, 3P or limit value) 2 x 0/4 … 20 mA
Alarm relay	250 V ~ 3 A, 700 VA changeover contact
Electrical connection	24 V ~=/100 V~/115 V~/200 V~/230 V~
Ambient temperature	Control panel version: 0 … 50 °C (0 … 45 °C with fully expanded unit) Wall mounted: -5 … 50 °C (-5 … 40 °C with fully expanded unit)
Enclosure rating	Control panel version: IP 54 Wall mounted: IP 65
Dimensions	Control panel version: 96 x 96 x 140 mm (WxHxD) Wall mounted: 189 x 200 x 76 mm (WxHxD)

	Order no.
Mounting kit for control panel installation	792908

A complete channel consists of:

- Transmitter /controller D1Ca (see Identcode)
- Housing: DGMa…, DLG III…
- H_2O_2 sensor or
- Peracetic acid sensor
- Transducer for H_2O_2 PEROX sensor
- Sensor cable

(for further information: Immersion Probe Fittings see p. → 7-71;
Sensor for hydrogen peroxide see p. → 7-46;
Sensor For Peracetic Acid see p. → 7-45;
Measurement Transducer 4...20 mA (Two Wire) see p. → 8-81;
Sensor Accessories see p. → 7-62)

8.4 DULCOMETER® Single-Channel Measuring And Control Unit, Type D1Ca

8.4.10 Identcode Ordering System For H_2O_2 And Peracetic Acid Single Channel Controller

DULCOMETER®controller D1Ca range

D1Ca	Installation													
	D	Control panel version 96 x 96 mm (IP 54)												
	W	Wall mounted (IP 54)												
		Power supply												
		0	230 V, 50/60 Hz											
		1	115 V, 50/60 Hz											
		2	200 V, 50/60 Hz (control panel version only)											
		3	100 V, 50/60 Hz (control panel version only)											
		4	24 V, AC/DC											
			Measured variable											
			A	Peracetic acid										
			H	Hydrogen peroxide										
				Measured variable connection										
				1	0/4-20 mA standard signal terminal for sensors with PEROX micro-transducer									
				7	0/4-20 mA standard signal terminal for PAA 1 and PER 1 sensors									
					Correction variable (temperature)									
					0	None								
					2	Temperature Pt100 via terminal*								
					3	Temperature via 0/4-20 mA standard signal (DULCOTEST® transducer)*								
					4	Manual temperature input*								
						* only with measured variable connection option 1								
						Disturbance variable								
						0	None							
						1	Flow as 0/4-20 mA standard signal							
						2	Flow as frequency 0-500 Hz							
						3	Flow as frequency 0-10 Hz							
							Control input							
							0	None						
							1	Pause						
								Signal output						
								0	None					
								1	0/4-20 mA standard signal measured value					
								2	0/4-20 mA standard signal control variable					
								3	0/4-20 mA standard signal correction variable					
								4	2 0/4-20 mA standard signal outputs, freely programmable, only in conjunction with measured variable connection "7"					
									Relay control					
									G	Alarm, timer and 2 limit values relay				
									M	Alarm and 2 solenoid valve relay (pulse length control)				
									R	Alarm relay and servo motor with feedback signal (3P)				
										Pump control				
										0	None			
										2	2 pumps			
											Control characteristic			
											0	None		
											1	Proportional control		
											2	PID control		
												Protocol output		
												0	None	
													Language	
													D	German (E, F, N)
													E	English (D, F, N)
													F	French (D, E, N)
													I	Italian (D, F, S)
													N	Dutch (D, E, F)

8.4 DULCOMETER® Single-Channel Measuring And Control Unit, Type D1Ca

8.4.11 Sensors For Hydrogen Peroxide

The DULCOTEST® PEROX and PER1 probes are membrane-covered amperometric sensors for online determination of hydrogen peroxide concentration. Because it is totally biologically degradable, hydrogen peroxide is frequently used as a disinfectant and oxidant in water treatment and production:

- Chemical bleaching in the timber, paper, textile and mineral salt industries
- Organic synthesis in the chemical, pharmaceutical and cosmetics industries
- Oxidation of drinking water, landfill seepage water, contaminated ground water
- Disinfection of cooling water, service water and production water in the pharmaceutical and food and beverages industries, and in swimming pools
- Deodorisation (gas scrubber) in municipal and industrial wastewater purification plants
- Dechlorination in chemical processes

The sensors are selected using the following decision table:

Requirement	Type PER1	PEROX
Sensor matrix contaminated by dirt or chemicals	Suitable due to impermeable diaphragm	More susceptible due to permeable diaphragm
Electrical interference due to interference potentials in the sample medium	Immune as counter electrode is separated from process	More susceptible as counter electrode is in the medium
Temperature range	Up to 50 °C	Up to 40 °C
Ease of handling during installation and maintenance	Suitable because temperature compensation and measuring transducer are integrated in the sensor	Separate temperature sensor and measuring transducer
Response time for H_2O_2 for fast controlling	Inert T_{90}= 6-8 min	Fast: T_{90}= 20 s
Fast temperature changes	Inert because of integrated temperature sensor	Fast because of separate temperature sensor
Long process cycles without presence of H_2O_2	unsuitable	Suitable because of pulsed polarisation technology
Measuring range can vary from time to time because of size arrangements or is not clear at time of ordering	Selection of a suitable sensor necessary	Suitable because measuring range can be selected manually at the sensor transducer
Price of the measuring station	lower	higher

Operating conditions

Requirement	Type PER1	PEROX
Measured variable	Hydrogen peroxide	Hydrogen peroxide
Calibration	Photometrically with DT3 hand-held photometer DT3, see Chap. 5.4.4	Photometrically with DT3 hand-held photometer DT3, see Chap. 5.4.4
Measuring ranges	0…20/200/2,000 mg/l 0…1 Vol. % different sensors	1…20/10…200/100…2,000 mg/l switchable
pH range	2,5…11	2,5…10
Temperature	0…50 °C	0…40 °C (at > 1,000 ppm 0 …30 °C)
Permissible temperature changes	< 0.3 °K/min	< 1 K/min (for external temperature measurement) see operating instructions
Response time sensor	T_{90}approx. 480 sec	T_{90} approx. 20 sec
Reproducible measuring accuracy	1 ppm or better than ± 5 % of measuring value	better 2 % referred to final value of measuring range
Min. conductivity	0.05…5.00 mS/cm	for measuring range 20 mg/l: 5 µS/cm measuring range 200 mg/l: 200 µS/cm up to 1,000 mg/l: 500 µS/cm up to 2,000 mg/l: 1 mS/cm
Sample water flow rate	20…100 l/h in DGMa	recommended 60 l/h
Max. operating pressure	0…1 bar	2 bar
Supply voltage	16…24 V DC (two-wire technology)	16…24 V DC (three-wire technology)
Output signal	4…20 mA, temperature-compensated, uncalibrated, not electrically isolated	4…20 mA, temperature-compensated, uncalibrated, not electrically isolated
Typical application	Swimming pool, treatment of contaminated waste waters, treatment of process media from production	Treatment of clear and chemically uncontaminated waters, controlling with required short response times
Measuring and control unit	D1Ca…H 7	D1Ca…H 1
Fittings	DGM, DLG	DGM, DLG

8.4 DULCOMETER® Single-Channel Measuring And Control Unit, Type D1Ca

Accessories

	Order no.
Perox sensor PEROX-H2.10-P	792976
Perox transducer V1	741129
PER 1-mA-200 ppm	1022509
PER 1-mA-2000 ppm	1022510

Example Configurations

Example of a H2O2 measuring point PEROX as components

Item	Name	Order no.
1	H_2O_2-controller D1Ca##**H1**... (complete Identcode see Chap. 8.3.7)	–
2.1	Perox sensor PEROX-H2.10-P (see Chap. 7.3.8)	792976
2.2	Temperature sensor Temperature sensor, Pt 100	305063
3	Perox transducer V1 three switchable measuring ranges 20/200/ 2,000 mg/l (see Chap. 7.3.8)	741129
4	Polishing paste (90 g tube)	559810
5	Magnetic stirring rod 15x6 PTFE (magnetic “fish“)	790917
7	Magnetic stirrer 100 … 240 V	790915
6	Test lead, 3-core (3 x 0.25 mm^2, 5 mm diam.), state length	791948
7	SN6 - open ended (Cable PT 100 with D1C, 5 m)	1003208
8	DLG III A with PVC hose connectors (Type DGMa3#1T010, see Chap. 7.5.3)	914955
8.1	**Alternatively for water containing impuities:** DLG IV PVC with four slots for sensors, connection: DN 10 (see Chap. 7.5.3)	1005332
9	Photometer DT3, compl. in case (see Chap. 8.9.3)	1023143

Example of a H_2O_2 measuring point PER1 as components

Item	Name	Order no.
1	H_2O_2-controller D1Ca##**H7**... (complete Identcode see Chap. 8.3.7)	–
2	PER 1-mA-200 ppm (see Chap. 7.3.8)	1022509
2.1	Alternatively: PER 1-mA-2000 ppm (see Chap. 7.3.8)	1022510
3	Signal lead, sold by the meter 2 x 0.25 mm^2 Ø 4 mm	725122
4	DLG III A with PVC hose connectors (Type DGMa3#1T010, see Chap. 7.5.3)	914955
4.1	DLG III B with PVC adhesive connectors , for installation of two sensors PG 13.5 and one amperometric sensor, connection DN 10 (see Chap. 7.5.3)	914956
4.1.1	Assembly kit for fitting amperometric sensors in DLG III B (see Chap. 7.5.3)	815079
5	Photometer DT3, compl. in case (see Chap. 8.9.3)	1023143

Example of a peracetic acid measuring point PAA 1 as components

Item	Name	Order no.
1	PAA controller D1Ca##**A7**... (complete Identcode see Chap. 8.3.7)	–
2.1	PAA 1-mA-200 ppm (see Chap. 7.3.7)	1022506
2.1	**Alternatively:** PAA 1-mA-2000 ppm (see Chap. 7.3.7)	1022507
3	Signal lead, sold by the meter 2 x 0.25 mm^2 Ø 4 mm	725122
4	DLG III A with PVC hose connectors (Type DGMa3#1T010, see Chap. 7.5.3)	914955
4.1	DLG III B with PVC adhesive connectors , for installation of two sensors PG 13.5 and one amperometric sensor, connection DN 10 (see Chap. 7.5.3)	914956
4.1.1	Assembly kit for fitting amperometric sensors in DLG III B (see Chap. 7.5.3)	815079

8.5 DULCOMETER® Two-channel measuring and control unit for the treatment of pool water, type DSRa

8.5.1 DULCOMETER® DSRa two-channel controller

DULCOMETER® DSRa transducers with control function are intended for the simultaneous measurement and control of the measured variables pH and ORP. They provide basic functions for applications in the treatment of swimming pool water.

Features

- Large, easily readable illuminated display for display of measured values and parameterisation/configuration
- Plain text operator guidance in 8 selectable languages
- 2 digital inputs for pause or sample water errors or level switch-off
- Two power actuating outputs for control of the metering pumps by pulse width modulation (direct switching of operating voltage)
- Control characteristics: Proportional control for both measured variables
- One control direction (raise or lower measured value, selectable)
- Protective RC circuit to protect the power relays when switching inductive loads, such as motor-driven metering pumps
- The display can be switched to ppm chlorine, with control being based on ORP

Applications

- Swimming pool water treatment

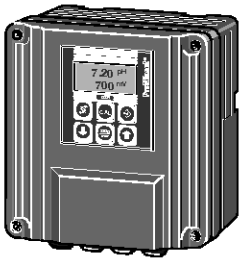

P_DM_0020_SW

Technical Data

Measurement range	pH: 2.00 ... 12 ORP: 100 ... 1000 mV
Resolution	pH: 0.01 pH ORP: 1 mV
Control characteristic	P controlling
Control	Two 1-way controllers with selectable control direction (raise/lower)
Control outputs	2 power relays under operating voltage with pulse length control outputs
Electrical connection	115 V~/230 V~
Ambient temperature	-5 ... 50 °C
Enclosure rating	Wall mounted: IP 65
Dimensions	Wall mounted: 189 x 200 x 76 mm (WxHxD)

A complete pool measuring and control system includes the following components (without metering pumps). The lengths of the cables depend on the respective installation:

- 1 Transducer with control function, type DSRa, identcode DSRAW20PR5020N010D1
- 1 DULCOTEST® flow meter DGMa120T000
- 1 pH sensor, PHES 112 SE, part no. 150702
- 1 ORP sensor, RHES-Pt-SE, part no. Nr. 150703
- 2 Cable combinations coax 2 m - SN6 preconf., part no. 1005672

8.5 DULCOMETER® Two-channel measuring and control unit for the treatment of pool water, type DSRa

8.5.2 Identcode Ordering System Two Channel Controller

DULCOMETER® controller series DSRa

DSRa	Montageart														
	W	Wandaufbau (IP 65)													
		Version													
		0	Housing colour RAL 7035, light grey												
		2	Housing colour, RAL 5003, blue												
			Operating voltage												
			0	230 V, 50/60 Hz											
			1	115 V, 50/60 Hz											
				Measured variable											
				PR	ph/ORP										
					Connection of measured variable										
					5	mV terminal (for pH or ORP)									
						Correction variable									
						0	None								
							Control input								
							2	2 Pause / Contact inputs							
								Signal output							
								0	None						
									Power control						
									N	Switch on operating voltage (relay with operating voltage)					
										Pump control					
										0	no frequency control				
											Control characteristic				
											0	Proportional control			
												Communication interface			
												0	None		
													Language		
													D	german	
													E	english	
													F	french	
													G	czech	
													I	italian	
													R	russian	
													N	dutch	
													S	spanish	
														Default setting	
														1	Optional display in ppm (not enabled on delivery)
														Approval	
														01	CE approval

8.6 DULCOMETER® Two-Channel Measuring And Control Unit, Type D2Ca

8.6.1 Combined Controller for pH/Chlorine, pH/ORP, Chlorine/Chlorine, pH/Chlorine Dioxide and pH/pH, Two-Channel Controller, Type D2Ca

- different configurations means optimised adaptation to process requirements
- large, clear graphic display for the measured values
- full text user guidance
- limit value monitoring with controller output deactivation as standard
- disturbance-free two-wire sensor connector
- 2 signal outputs 0/4…20 mA, electrically isolated
- different designs for wall and control panel mounting
- 2 digital inputs for pause and error sample water
- differential pH measurement (sensor monitoring)
- differential chlorine measurement
- control output to minimise combined chlorine

Applications:

- Waste water treatment
- Cooling water treatment
- Drinking water treatment
- Neutralisation
- Swimming pool water treatment
- All applications which have to be equipped with a redundant pH measurement for safety reasons.

Technical Data





pk_5_015

Measurement range	pH 0.00 … 14.00 ORP 0 … +1000 mV Chlorine 0 … 0,5/2/10/20/50/100 ppm Chlorine dioxide 0.00 … 0.500/2.00/10.0/20.0 ppm Chlorine/Chlorine 0 ... 2/5/10 ppm
Resolution	0.01 pH/1 mV/0.001 ppm/0.01 ppm
Accuracy	0.5 % from measurement range
Measurement input	pH/ORP (input resistance > 10^{12} Ω) measured variable 1: mV terminal (input resistance> 5 x 10^{11} Ω) or Standard 4 … 20 mA signal terminal measured variable 2: Standard 4 … 20 mA signal terminal
Correction variable	Temperature via Pt 100 (pH only)
Correction range temp.	0 … 100 °C
Control characteristic	P/PID control
Control	unidirectional (pH/ORP and pH/chlorine)
Signal current output	2 x electrically isolated 0/4-20 mA max. load 600 Ω (400 Ω 2nd output) Adjustable range and direction (measured, correction and control variable)
Control outputs	2 reed contacts (pulse frequency, pump actuation) 2 relays (pump impulse, 3P or limit value) 2 x 0/4 … 20 mA
Control input	Voltage free (electrically isolated) – pause – error, water sample (or superchlorination or basic load chlorine
Alarm relay	250 V ~3 A, 700 VA changeover contact
Electrical connection	24 V ~=/115 V~/230 V~
Ambient temperature	Control panel version: 0 … 45 °C Wall mounted: -5 … 40 °C
Enclosure rating	Control panel version: IP 54 Wall mounted: IP 65
Dimensions	Control panel version: 96 x 96 x 140 mm (WxHxD) Wall mounted: 189 x 200 x 76 mm (WxHxD)

Note:

The pH/pH and chlorine/chlorine versions include only one 2-way controller for measuring channel 1.

Measured variable 2 can only be used for monitoring tasks or to calculate the difference. Measuring channel 2 with chlorine/chlorine can only display the bound chlorine.

8.6 DULCOMETER® Two-Channel Measuring And Control Unit, Type D2Ca

A complete measuring station comprises the following:

- D2Ca measuring transducer /controller (see Identcode)
- In-line probe housing: DGMa..., DLG III ..., immersible in-line probe housing
- Chlorine sensor
- Chlorine dioxide
- Assembly set for chlorine/chlorine dioxide sensor
- pH sensor
- ORP sensor
- Transducer for pH and/or ORP (dependent on Identcode)
- Sensor cable

(for further informations: Immersion Probe Fittings see p. → 7-71;Chlorine Sensors see p. → 7-27; Chlorine Dioxide Sensors see p. → 7-39; pH Sensors With SN6 Or Vario Pin see p. → 7-11; ORP Sensors With Fixed Cable see p. → 7-23; Measurement Transducer 4...20 mA (Two Wire) see p. → 8-81; Sensor Accessories see p. → 7-62)

8.6 DULCOMETER® Two-Channel Measuring And Control Unit, Type D2Ca

8.6.2 Identcode Ordering System Two Channel Controller

DULCOMETER®Controller D2Ca range

D2Ca	Installation											
	D	Control panel version 96 x 96 mm (IP 54)										
	W	Wall mounted (IP 65)										
		Power supply										
		0	230 V, 50/60 Hz									
		1	115 V, 50/60 Hz									
		4	24 V, AC/DC									
			Measured variable									
			PC	pH/chlorine (0-14 pH; 0-0.5/2/5/10/20/50/100 ppm)								
			PR	ph/ORP (0-14 pH; 0-1000 mV)								
			PP	pH/pH (0-14 pH)[1]								
			CC	Chlorine/Chlorine (0-2/5/10 ppm)								
			PD	pH/Chlorine dioxide (0-0.5/2/10/20 ppm)								
				Measured variable connection								
				1	Standard 0/4-20 mA terminal (measuring transducer, see section 7.5.1 or 7.2.1)							
				2	SN6 plug							
				5	mV terminal							
					Correction variable (temperature compensation for pH)							
					0	None						
					2	Temperature for P via terminal (Pt 100) for pH only						
					4	Manual temperature input for P for pH only						
						Disturbance variable						
						0	None					
							Signal output					
							0	None				
							4	2 programmable 0/4-20 mA standard signal outputs				
								Relay control				
								G	Alarm and 2 limit values relay			
								M	Alarm and 2 solenoid valve relay (pulse length control)			
									Control characteristic			
									1	Proportional control		
									2	PID control		
										Protocol output		
										0	None	
											Language	
											D	German
											E	English
											F	French
											I	Italian (only PC and PR)
											S	Spanish
											A	Swedish
											N	Dutch
											P	Polish (only PC and PR)

Note:

The pH/pH and chlorine/chlorine versions include only one 2-way controller for measuring channel 1.

Measured variable 2 can only be used for monitoring tasks or to calculate the difference. Measuring channel 2 with chlorine/chlorine can only display the bound chlorine.

8.7 Multi-Channel Measuring And Control System For Drinking Water And Swimming Pool Water Treatment

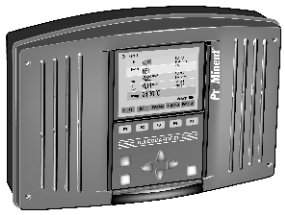

pk_5_045

The Multi-channel Measuring and Control System DULCOMARIN® II has the following features:

- 5.7", 1/4 VGA colour display for ease of operation
- Integrated data logger with screen recorder: Directly view the measured data on the controller
- SD card and card reader included: simply transmit measured data to the PC as standard
- Control of one to 16 drinking water systems or filtration circuits in swimming pools
- CAN bus system: Simple wiring and can be subsequently upgraded
- Visualisation*: Simple with embedded web server* and standard web browser
- LAN port*: Simple connection to PC or PC network or internet
- Operation possible using Apple® iPod or iPad (WLAN access point needed)
- Intelligent sensors: with CANopen bus, save the sensor data and stay within the optimum measuring range thanks to auto ranging
- Intelligent metering pumps: using CANopen bus obtain information on operating parameters, such as for instance: chemicals levels and pump capacity in the metering range of 0.74 l/h to 1,030 l/h
- Standby metering pump for disinfectant (automatic switchover in the event of low level and pump malfunction)

Area of application drinking water (and general applications)

- Using a power input module (I module), the following measuring parameters can be measured via 0/4...20 mA and displayed. These values are also available on the data logger/screen recorder, the web and OPC server:

- Flow (as disturbance variable for pH and chlorine control)
- UV intensity
- Conductivity
- Chlorine dioxide
- Chlorite
- Ammonia
- Fluoride
- Pt100 resistance thermometer via a transducer

- Display and control of free chlorine and total available chlorine
- OPC server*: Simple connection to superordinated visualisation systems

*optional

Area of application swimming pools

- Remote calibration possible using Apple® iPod or iPad (WLAN access point needed)
- Energy and chemical savings thanks to new EcoMode
- Integral filter control
- Bound chlorine: is reliably minimised via controller output and corresponding systems
- OPC server*: Simple connection to superordinated visualisation systems
- Control of pool temperature via standard temperature controller (Pt100x needed)
- High chlorination or night setback by means of contact via second parameter set
- The decentralised modular DULCOMARIN® II system is designed for use in public swimming pools in compliance with DIN 19643. The system can be configured to meet the demand for a compact DULCOMARIN® II compact system or as a decentralised modular system DULCOMARIN® II DULCO®-Net.

The areas of application are determined in the identcode

Every drinking water measurement system or every filtration circuit features its own on-site calibration option for all measured variables.

What is the Eco!Mode operating mode?

Eco!Mode enables the circulation capacity to be reduced if the DIN hygienic parameters pH, redox, free and bound chlorine are within the permitted limits.

A circulation pump with frequency converter with an analog input is needed for this.

This reduction can be enabled depending on the DIN hygienic parameters, time and activation via a remote control input. A combination of the criteria is also possible. If the DIN hygienic parameters can no longer be met, then the circulation capacity is raised again to nominal capacity.

Lowering the pump capacity saves energy, thereby reducing CO_2 emissions.

Furthermore, when a set redox potential is reached, for instance 780 mV, signalling good disinfection of the water, then chlorine metering is either reduced gradually or in one step. If the DIN hygienic parameters can no longer be met, then chlorine metering is raised again to its standard setpoint.

8.7 Multi-Channel Measuring And Control System For Drinking Water And Swimming Pool Water Treatment

What is a web server?

A web server is a software application that is implemented by the DULCOMARIN® II.

The web server provides web pages with information about measurements, control, sensor calibration and controller configuration to a PC with web browser (e.g. Microsoft® Internet Explorer).

The web server can be used to provide simple visualisation of the DULCOMARIN® II without special visualisation software being needed on the PC. The web server is independent of the PC operating system.

The DULCOMARIN® II is connected to a PC via a LAN/Ethernet port and the connection can be made directly, via a network or via the internet. The cables needed for direct connection to a PC or network are included.

Commercially available standard network components can be used for the cabling, router and WLAN access points etc.

The same information is available via the web server as on the DULCOMARIN® II itself, for instance the setpoints of all control variables can be changes, the various controller can be switched off and the pool/system names can be entered. Exceptions to this are the controller settings and bus configuration that can only be entered directly on the controller itself.

What is OPC?

OPC stands for Openness, Productivity, Collaboration (formerly OLE for Process Control) and designates a uniform and manufacturer-independent software interface. OPC Data Access (OPC DA) is based on Windows technology COM (Component Object Model) and DCOM (Distributed Component Object Model). In contrast, OPC XML is based on the internet standards XML, SOAP, and HTTP.

OPC is used wherever sensors, controllers, and controls from various manufacturers are used to form a common, flexible network. Without OPC, two devices require precise knowledge of the communication options of the other device to be able to exchange data. Extensions and replacement are therefore correspondingly difficult. With OPC, an OPC-compliant driver for each device has to be written only once. Ideally this driver is provided by the manufacturer. An OPC driver can be integrated easily in any major control and monitoring system without needing much in the way of adaptation.

ProMinent provides an OPC server/driver for the Multi-channel Measuring and Control System DULCOMARIN® II.

The examples shown below are suitable for applications in drinking water treatment and swimming pool systems.

8.7 Multi-Channel Measuring And Control System For Drinking Water And Swimming Pool Water Treatment

8.7.1 Multi-Channel Measuring And Control System DULCOMARIN®II compact

The multi-channel measuring and control system DULCOMARIN®II is suitable to control 1 to 16 filtration circuits or drinking water systems. The following bus modules are available for the control:

M module (measurement and controlling):

- Measurement and control of the pH value
- Measurement and display (optional control) of the ORP
- Measurement and display of the temperature of the sample water
- Sample water monitoring
- Measurement of free chlorine
- Measurement of combined chlorine (optional, calculated from total chlorine and free chlorine)

Chlorine sensors:

- Measurement of free chlorine and temperature
- Measurement of total available chlorine and temperature
- Measurement of combined chlorine as differential chlorine measurement

A module (controlling of metering pumps, analogue outputs):

- 3 frequency outputs to control metering pumps for pH correction, disinfection and flocculant metering
- 3 contact inputs to process pump alarm relays or tank fill level monitoring
- 4 freely programmable analogue outputs 0/4…20 mA for pH, ORP, free chlorine, combined chlorine or temperature

P module (controlling of peristaltic pumps, power supply of bus modules):

- Power relay pulse length control for pH value (e.g. controlling of peristaltic pump)
- Power relay pulse length control of disinfectant (e.g. controlling of chlorine electrolysis plant)
- Power relay limit value output to minimise combined chlorine
- Alarm relay
- Power supply of bus modules

N module (power supply of bus modules):

- Power supply of bus modules with no further function

R module (controlling of chlorine gas metering units):

- Controlling of a chlorine gas metering unit and processing of a position feedback potentiometer (0…10 kΩ) (only possible as external module)

Metering pumps with CANopen interface of the type Beta®, delta®, Sigma/ 1, Sigma/ 2, and Sigma/ 3

- Direct connection to the bus
- When using Beta/4aCANopen metering pumps, the A module is not required (provided no current outputs are required).

I module (current input module)

- 2 current inputs active/passive (e.g. to connect 2-wire measuring transducers)
- 1 current inputs passive (e.g. to connect a magnetically-inductive flow meter)
- 2 digital inputs for sample water alarm and pause control

8.7 Multi-Channel Measuring And Control System For Drinking Water And Swimming Pool Water Treatment

Example 1

The example of a measuring and control system for pH, ORP, free chlorine and tempe-rature shown for a filter circuit consists of the following components (without chemical fluid handling):

A Systems room

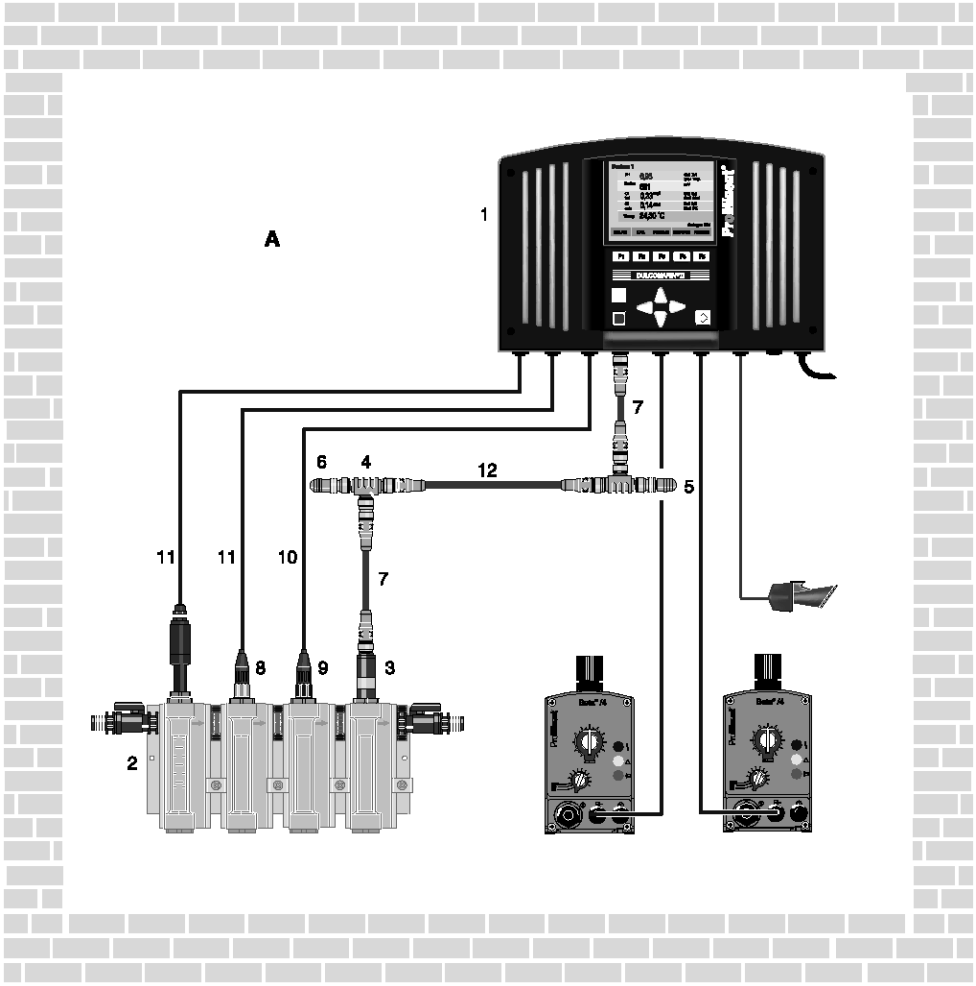

pk_5_020

Item	Num-ber	Name	Order no.
1	1	DULCOMARIN® II central unit with measurement and actuation modules DXCa W 0 0 1 M A P S EN 01	–
2	1	DULCOTEST® in-line probe housing DGMa 3 2 1 T 0 0 0	–
3	1	Chlorine sensor CLE 3-CAN-10 ppm	1023425
4	3	T-distributor M12 5 pol. CAN	included in delivery
5	1	Temination resistance M12 connector	included in delivery
6	1	Temination resistance M12 plug	included in delivery
7	3	Connection cable - CAN M12 5 way 0.5 m	included in delivery
8	1	pH sensor PHES 112 SE	150702
–	–	PHES 112 SE	150092
9	1	ORP sensor RHES-Pt-SE	150703
10	2	Cable combination coax 2 m- SN6 - pre-assembled*	1024106
11	2 m	Signal lead, sold by the meter 2 x 0.25 mm^2 Ø 4 mm	725122
12	–	Connection cable CAN	as required

8.7 Multi-Channel Measuring And Control System For Drinking Water And Swimming Pool Water Treatment

Example 2

The example of a measuring and control system for pH, ORP, free and combined chlorine and temperature shown for a filter circuit consists of the following components (without chemical fluid handling):

A Systems room

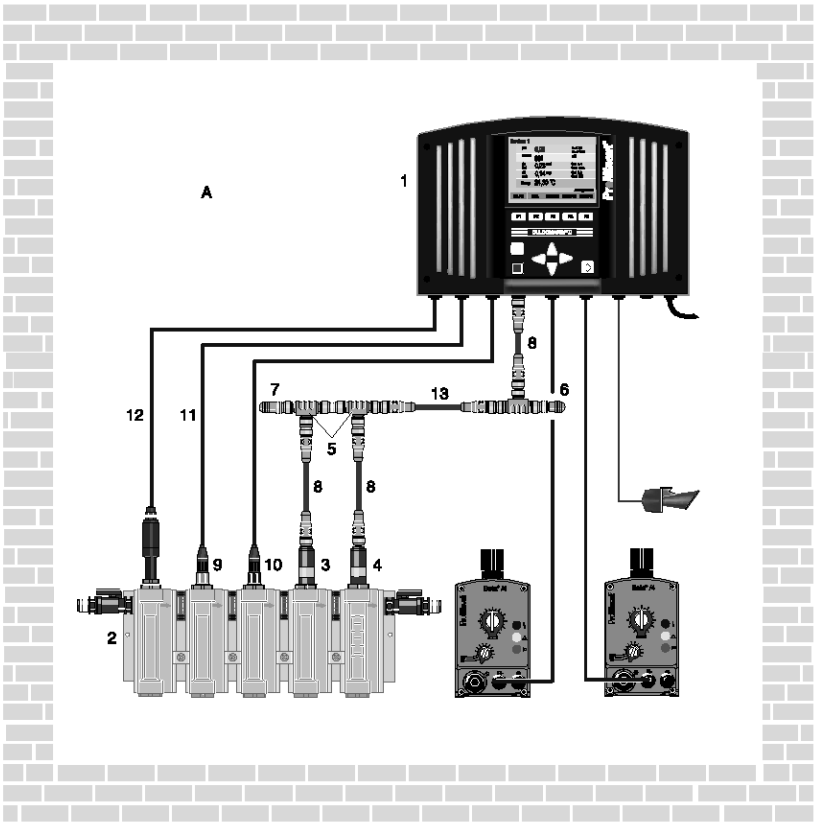

pk_5_020_1

Item	Number	Name	Order no.
1	1	DULCOMARIN® II central unit with measurement and actuation modules DXCa W 0 0 1 M A P S EN 01	–
2	1	DULCOTEST® in-line probe housingDGMa 3 2 2 T 0 0 0	–
3	1	Chlorine sensor CTE 1-CAN-10 ppm	1023427
4	1	Chlorine sensor CLE 3.1-CAN-10 ppm	1023426
5	3	T-distributors M12 5 pole CAN	included in delivery
6	1	Load resistor M12-coupler	included in delivery
7	1	Load resistor M12-plug	included in delivery
8	3	Connecting cable - CAN M12 5 pole 0.5 m	included in delivery
9	1	pH sensor PHES 112 SE	150702
–	–	PHES 112 SE	150092
10	1	ORP sensor RHES-Pt-SE	150703
11	2	Cable combination coax 2 m- SN6 - pre-assembled*	1024106
12	2 m	Signal lead, sold by the meter 2 x 0.25 mm^2 Ø 4 mm	725122
13	1	Connection cable CAN	as required

8.7 Multi-Channel Measuring And Control System For Drinking Water And Swimming Pool Water Treatment

8.7.2 Identcode Ordering System DULCOMARIN®II compact

DULCOMARIN®II DXC range

DXCa	Installation										
	W	Wall mounting (IP 65)									
	S	Control cabinet (IP 54)									
		Version									
		0	With controls								
		D	with operating elements for use in drinking water/disinfection applications								
			Communication interfaces								
			0	None							
			5	Embedded web server, LAN including 5 m LAN patch cable 1:1, LAN coupling, 5 m crossovercable [1]							
			6	OPC server + embedded web server, LAN including 5m LAN patch cable 1:1, LAN coupling, 5m crossover cable [1]							
				Options							
				0	none						
				1	Videographic recorder with data logger including SD card and USB card reader for PC						
					Module 1						
					M	M module, measurement module for pH, ORP, temperature					
					A	A module, control module: 3 pump and 4 analogue outputs					
					I	I module, current input module, 3 mA, 2 digital inputs					
						Module 2					
						0	Not used				
						A	A module, control module: 3 pump and 4 analogue outputs				
						M	M module, measuring module pH, ORP, temperature				
						I	I module, current input module, 3 mA, 2 digital inputs				
							Module 3				
							P	P module, mains power module, 1 alarm relay, 3 solenoid valve relays			
							N	N module, mains power module without relay			
								Application			
								S	Swimming pool		
								D	Drinking water/disinfection		
									Language default		
									DE	German	
									EN	English	
									ES	Spanish	
									FR	French	
									IT	Italian	
									PL	Polish	
									NL	Dutch?	
									CZ	Czech	
										Approvals	
										01	CE mark

The Identcode describes the **DULCOMARIN®II compact** controller.

[1] The supplied cable is intended for the connection to a hub, switch, router, or Intranet.
For a direct connection of the DULCOMARIN®II to a PC/MAC, the supplied LAN coupling and the cross-over cable cat. 5 are required.
The maximum LAN cable length is approx. 100 m.
To operate the Web server on a PC we recommend using Microsoft®Internet Explorer 5 or higher as browser.
The following components are supplied in the DXCa package:
1 T-distributor, 1 connecting cable CAN,
1 termination resistor coupling and
1 termination resistor plug,
1 SC card, 1 card reader for PC.

Important note when ordering multi-channel measuring and control systems for drinking water and pool water applications:

Drinking water applications: In the identcode, a "D" for "Drinking water/disinfection" must be selected under "Version" and "Application". The description "System" will appear in the controller menu for the different drinking water lines.

Swimming pool water applications: In the identcode, a "0" for "with operating elements" must be selected under "Version" and the an "S" for "Swimming pool" under "Application". The description "Tank" will appear in the controller menu for the different filter circuits.

All adjustment options and the use of the different modules are identical with both applications.

8.7.3 Multi-Channel Measuring And Control System DULCOMARIN®II DULCO®-Net

The multi-channel measuring and control system DULCOMARIN®II DULCO®-Net in the maximum configuration can control 16 drinking water systems/filtration circuits, i.e. the required external modules for 16 pools can be connected to the central unit and operated. The following options are given

Measurement and controlling of:

Up to 16 times:

- pH value
- ORP
- free chlorine
- combined chlorine (calculated)
- Temperature of the sample water

Additionally in the drinking water application (via I module):

- Flow rate (as disturbance for pH and chlorine control)
- UV intensity
- Conductivity
- Chlorine dioxide
- Chlorite
- Ammonia
- Fluoride
- Pt100 resistance thermometer via transducer

Other inputs and outputs:

Up to 16 times:

- 3 frequency outputs to control metering pumps for pH correction, disinfection and flocculant metering
- 3 contact inputs to process pump alarm relays or tank fill level monitoring
- 4 freely programmable analogue outputs 0/4…20 mA (for pH, ORP, free chlorine, combined chlorine or temperature)
- 3 power relays pulse length control of pH value, of the disinfectant and minimisation of combined chlorine (e.g. controlling of a peristaltic pump and chlorine electrolysis plant and UV plant)
- Controlling of a chlorine gas metering unit
- 3 Beta®/4CANopen metering pumps

Developed by Bosch and known from the automotive industry, the very fail safe CAN bus with CANopen protocol is used to transfer data between the different bus modules. The maximum length of the main bus train is 400 metres.

For connecting any bus module (M module, A module, P module, N Module, Beta®/4CANopen metering pumps and CAN chlorine sensors), a T-distributor is used which connects the units with the main bus train via a spur line.

T-distributor and spur line are included in the modules' delivery scope.

All bus modules are supplied with 24 V operating voltage via the CAN bus (except Beta®/4CANopen metering pumps, P modules, N modules. These require a separate power supply).

For this reason, additional P or N modules that supply operating voltage for the bus modules on the bus are required depending on the size of the installation (number of filtration circuits to be controlled). The central unit always includes a power supply unit (N or P module).

How many additional N or P modules do you require?

Number filtration circuits	Additional N or P modules	Number filtration circuits	Additional N or P modules
1	-	9	4
2	-	10	5
3	1	11	5
4	2	12	6
5	2	13	6
6	3	14	7
7	3	15	7
8	4	16	8

The DULCOMARIN®II compact and DULCO®-Net can be upgraded subsequently by simply connecting bus modules.

8.7 Multi-Channel Measuring And Control System For Drinking Water And Swimming Pool Water Treatment

Which components are included in a DULCOMARIN®II DULCO®-Net system?

A DULCOMARIN®II DULCO®-Net system consists of one:

- Central unit DXCa with controls

and the individual combination of the following components:

- M module, DXMaM (measurement and controlling)
- A module, DXMaA (controlling of metering pumps, analogue outputs)
- P module, (module in DXCa housing to supply power to modules and alarm relays, power relays to control e.g. peristaltic pumps)
- N Module, DXMaN (power supply of external modules with no further function)
- R module, DXMaR (controlling of chlorine gas metering units with position feedback processing)
- I module (processing of sensor signals above 0/4…20 mA)

The maximum main bus length is 400 m!

8.7.4 The Central Unit

A Stub cable
B Main BUS cable
C Stub cable

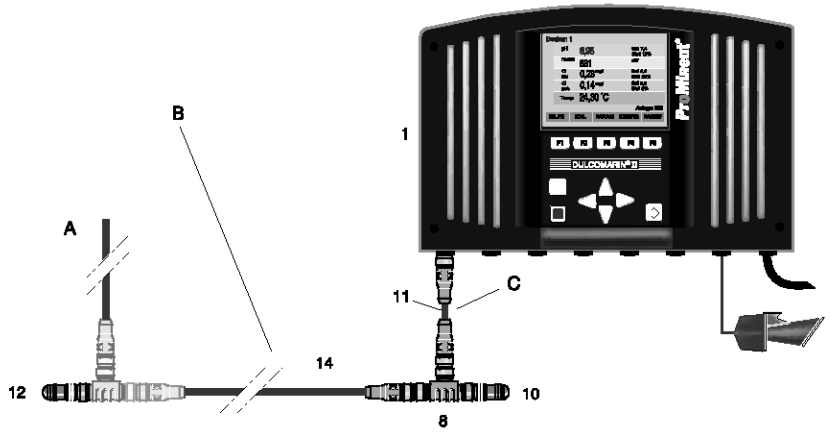

pk_5_041_2

The central unit can be installed at any place, e.g. in the control room. It serves as I/O unit (view measuring data, parameterise and configure individual modules). It includes the following functions: standard screen recorder/data logger function, interfaces*, embedded Web server*, and power supply. As an option, the central unit can also include a M and an A module if the central unit is also located in the control room. The central unit is connected to other units via the main bus train.

For this connection, the T-distributor and the CAN connecting cable 0.5 m included in the scope of delivery are used.

The main bus train must be fitted with termination resistors at either end.

These components are included in the delivery scope.

The central unit in the above example consists of the following components:

Item	Number	Designation	Order no.
1	1	DULCOMARIN®II central unit DXCa W 0 0 1 0 0 P S EN 01	
8	1	T-distributor M12 5P CAN	included in delivery
11	1	Connecting cable - CAN, M12, 5P, 0.5 m	included in delivery
14	1	Connecting cable - CAN, M12, 5P	depending on requirements
10	1	Termination resistor M 12 coupling	included in delivery
12	1	Termination resistor M 12 connector	included in delivery

* optional

8.7 Multi-Channel Measuring And Control System For Drinking Water And Swimming Pool Water Treatment

8.7.5 The Combination Module

A Stub cable
B Main BUS cable

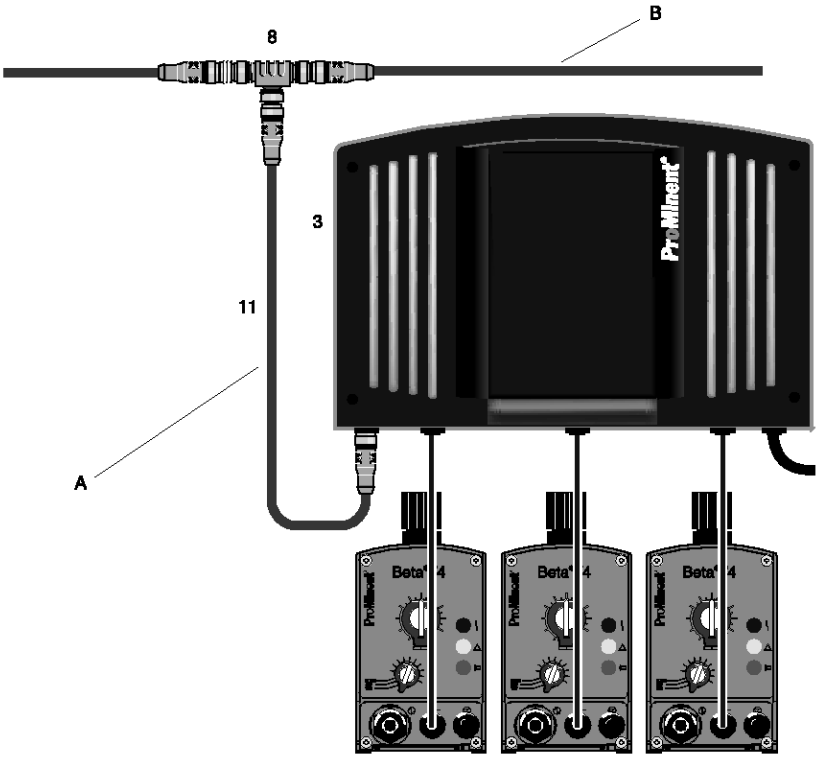

pk_5_044

Combination A module and P module

Up to three different modules can be connected to the combination module (DXCa without controls). The function of the combination module is based on the function of the individual modules (see description above). The modules in the combination module are operated via the DXCa central unit.

The module is connected to the other bus modules via the main bus cable using the T-distributor supplied and the 0.5 m CAN connection cable.

See the table below for the various fitting options:

Module position 1	Module position 2	Module position 3
M module	M module	P module
M module	M module	N module
A module	A module	P module
A module	A module	N module
M module	A module	P module
M module	A module	N module

The combination in the above example consists of the following components (without chemical fluid handling):

Item	Number	Name	Order No.
3	1	Control module DXCa W 2 0 0 0 A P S 00 01	
8	1	T-distributor M12 5-pole CAN	supplied
11	1	Connection cable - CAN M12 5-pole 0.5 m	supplied

8.7 Multi-Channel Measuring And Control System For Drinking Water And Swimming Pool Water Treatment

8.7.6 Identcode Ordering System Multi-Channel Measuring And Control System DULCOMARIN® II DULCO®-Net (Central Unit And Combination Module)

DULCOMARIN®II DXC range

DXCa	Installation											
	W	Wall mounting (IP 65)										
	S	Control cabinet (IP 54)										
		Version										
		0	With controls									
		2	Without controls									
		D	With operating elements for use in drinking water/disinfection applications									
			Communication interfaces									
			0	None								
			5	Embedded web server, LAN including 5 m LAN patch cable 1:1, LAN coupling, 5 m crossover cable								
			6	OPC server + embedded web server, LAN including 5 m LAN patch cable 1:1, LAN coupling, 5 m crossover cable								
				Options								
				0	None							
				1	Videographic recorder with data logger including SD card and USB card reader for PC							
					Module 1							
					0	Not used						
					M	M module, measuring module: pH, ORP, temperature						
					A	A module, control module: 3 pump and 4 analogue outputs						
					I	I module, current input module, 3 mA inputs, 2 digital inputs						
						Module 2						
						0	Not used					
						A	A module, control module: 3 pump and 4 analogue outputs					
						M	M module, measuring module: pH, ORP, temperature					
						I	I module, current input module, 3 mA inputs, 2 digital inputs					
							Module 3					
							P	P module, mains power module, 1 alarm relay, 3 solenoid valve relays				
							N	N module, mains power module unit without relay				
								Application				
								S	Swimming pool			
								D	Drinking water/disinfection			
									Language default			
									DE	German	IT	Italian
									EN	English	PL	Polish
									ES	Spanish	NL	Dutch
									FR	French	CZ	Czech
										Approvals		
										01	CE mark	

Please note the following:

Upgrade modules for existing systems require a software update for the existing system. A Software Update Kit is needed to avoid any possible incompatibility between the different modules.

The update kit is free of charge and one is also needed when ordering more than one upgrade module. The kit includes an SD memory card with the current software for the DULCOMARIN® II and a description about how to perform the software update.

	Order no.
Update kit/DXC and modules	1031284

The Identcode describes the complete **DULCOMARIN®II DULCO®-Net** central unit.

The peripheral components mentioned in the above item list, however, are not included. If modules are assigned to the central unit, the following applies:

Module 1 preferably assigned as M module

Module 2 preferably assigned as A module

Module 3 must always be assigned as P module or N module.

Important note when ordering multi-channel measuring and control systems for drinking water and pool water applications:

Drinking water applications: In the identcode, a "D" for "Drinking water/disinfection" must be selected under "Version" and "Application". The description "System" will appear in the controller menu for the different drinking water lines.

Swimming pool water applications: In the identcode, a "0" for "with operating elements" must be selected under "Version" and the an "S" for "Swimming pool" under "Application". The description "Tank" will appear in the controller menu for the different filter circuits.

All adjustment options and the use of the different modules are identical with both applications.

8.7 Multi-Channel Measuring And Control System For Drinking Water And Swimming Pool Water Treatment

8.7.7 M Module (Measuring Module)

A Stub cable
B Main BUS cable

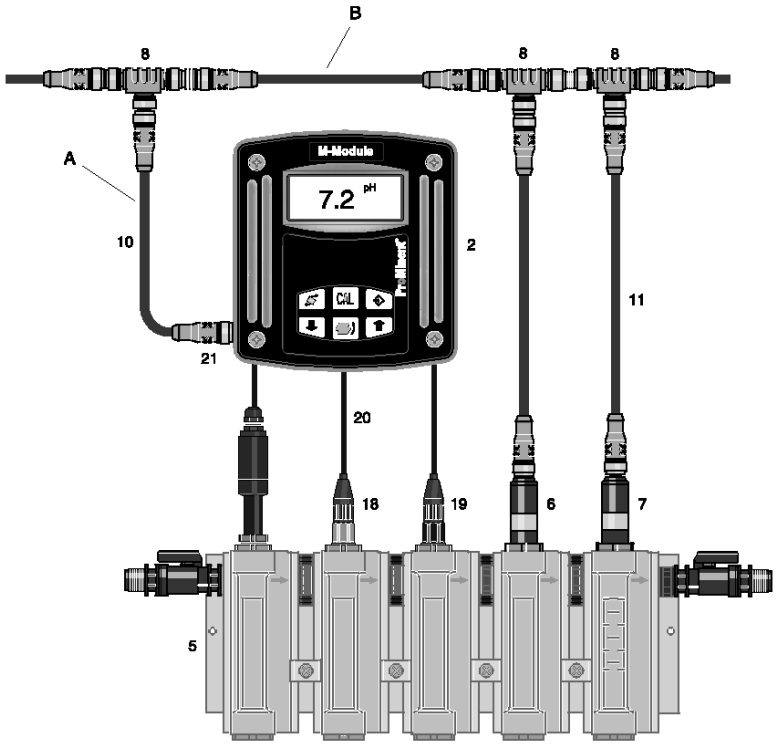

pk_5_042

The M module with its illuminated graphic display and keypad displays the measured values and allows all sensors for the corresponding filter circuit to be calibrated on site.

The following measurements can be taken:

- pH value
- ORP potential
- free chlorine and
- total available chlorine (optional or combined chlorine is calculated) and
- sample water temperature using the temperature probe in the chlorine sensor or optionally using a separate Pt100/Pt1000 resistance thermometer

The M module has 3 digital inputs for:

- sample water monitoring
- controlling breaks in filter backwashing
- Parameter changeover for Eco!Mode

The M module is connected to the other bus modules via the main bus cable, using the T-distributor supplied and the 0.5 m CAN connection cable.

The M module in the above example consists of the following components:

Item	Number	Name	Order no.
2	1	M module DXMa M W 0 S EN 01	DXMa M W 0 S DE 01
5	1	In-line probe housing DGMa 3 2 2 T 0 0 0	DGMa 3 2 2 T 0 0 0
6	1	Chlorine sensor CTE 1-CAN-10 ppm	1023427
7	1	Chlorine sensor CLE 3.1-CAN-10 ppm	1023426
8	3	T-distributor M12 5 pole CAN	included in delivery
10	1	Connection cable - CAN M12 5-pole 0.5 m	included in delivery
11	2	Connection cable - CAN M12 5-pole 0.5 m	included in delivery
18	1	pH sensor PHES 112 SE	150702
–	–	PHES 112 SE	150092
19	1	ORP sensor RHES-Pt-SE	150703
20	2	Cable combination coax 2 m- SN6 - pre-assembled*	1024106
21	2 m	Signal lead, sold by the meter 2 x 0.25 mm² Ø 4 mm	725122

8.7.8 I Module (Current Input Module)

A Stub cable
B Main BUS cable

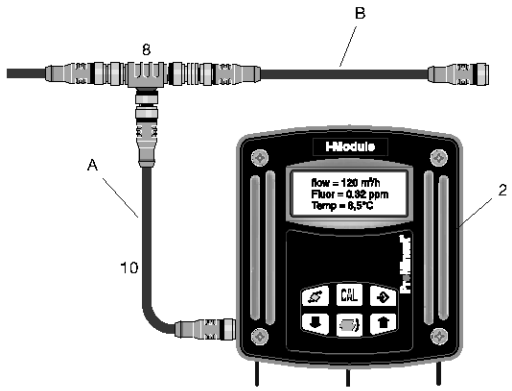

AP_DC_0011_SW

The I module with its illuminated graphic display and keypad is a current input module capable of processing 3 standard signals from sensors and two digital signals.

It can be used together with the multi-channel controller DULCOMARIN® II in drinking water and swimming pool applications. All measured variables are available in the screen writer and web and OPC®server.

Two analogue inputs are provided as 2-wire inputs and one as passive input.

The inputs can process the following values as 0/4... 20 mA standard signals:

- Turbidity
- Flow
- UV intensity
- Conductivity (via DMTa transducer)
- Chlorine dioxide*
- Chlorite
- Ammonia
- Fluoride
- Pt100 resistance thermometer via a transducer
- Dissolved oxygen
- Hydrogen peroxide *

The I module has 2 digital inputs for:

- sample water monitoring and
- pause control

The flow information can be used as an interference variable for the control of chlorine, pH correction and chlorine dioxide.

* these measured variables can also be controlled

The I module is connected to other bus modules via the main bus cable using the T-distributor and 0.5 m CAN connection cable supplied.

The I module in the above example consists of the following components:

Item	Number	Name	Order no.
2	1	I module DXMa I W 0 D EN 01	–
8	1	T-distributor M12 5P CAN	included in delivery
10	1	Connecting cable - CAN, M12, 5P, 0.5 m	Included in delivery

8.7 Multi-Channel Measuring And Control System For Drinking Water And Swimming Pool Water Treatment

8.7.9 A Module (Control Module)

A Stub cable
B Main BUS cable

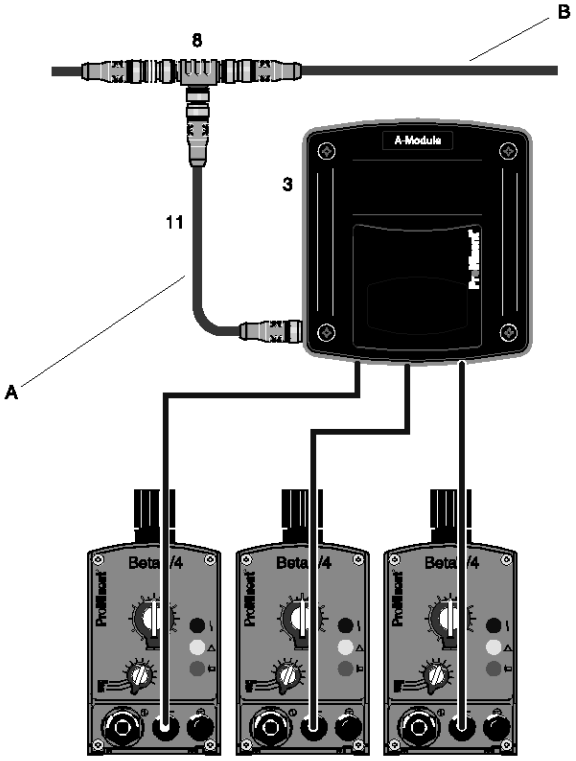

pk_5_043

The A module permits the control of up to three metering pumps via pulse frequency. Possible metering combinations are:

- pH lowering and disinfectant and flocculant or
- pH raising and disinfectant and flocculant or
- pH lowering and pH raising and disinfectant

It includes 3 digital inputs to evaluate the alarm relay of metering pumps, 4 freely programmable standard signal outputs 0/4…20 mA to document measured values, or as control outputs.

For this connection, the T-distributor and the CAN connecting cable 0.5 m included in the scope of delivery are used.

To be noted: If Beta®/4CANopen metering pumps are used, no A modules are required!

The A module in the above example consists of the following components (without metering technology):

Item	Number	Designation	Order no.
3	1	A module DXMa A W 20 00 01	
8	1	T-distributor M12 5P CAN	included in delivery
11	1	Connecting cable - CAN, M12, 5P, 0.5 m	included in delivery

The A module is connected to other units via the main bus train.

For connection to units which are not electrically isolated (e.g. PLC), an isolating amplifier, e.g. order no. 1033536, is required!

8.7.10 N Module (Power Supply Module)

A Stub cable
B Main BUS cable

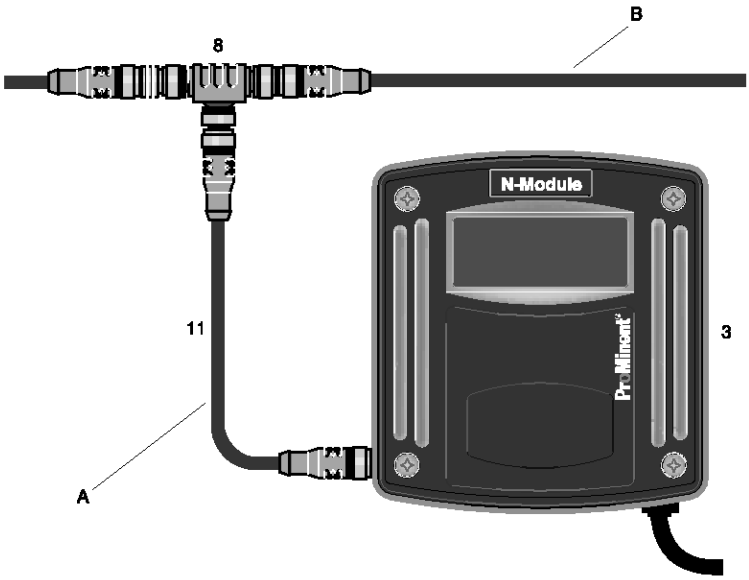

pk_5_043_C_power

The N module (power supply) is used to supply the bus modules with power and has no further function.

The number of N modules required can be seen from the table below. If P modules are used in a system, the number of N modules is reduced accordingly. The central unit always includes a power supply unit (N or P module)

How many additional N or P modules do you require?

Number filtration circuits	Additional N or P modules	Number filtration circuits	Additional N or P modules
1	-	9	4
2	-	10	5
3	1	11	5
4	2	12	6
5	2	13	6
6	3	14	7
7	3	15	7
8	4	16	8

The N module requires power supply for operation and is connected to the other bus modules via the main bus train. For this connection, the T-distributor and the CAN connecting cable 0.5 m included in the scope of delivery are used.

The N module in the above example consists of the following components:

Item	Number	Designation	Order no.
3	1	N module DXMa N W 2 0 00 01	
8	1	T-distributor M12 5P CAN	included in delivery
11	1	Connecting cable - CAN, M12, 5P, 0.5 m	included in delivery

If you have any questions, please contact our sales department.

8.7 Multi-Channel Measuring And Control System For Drinking Water And Swimming Pool Water Treatment

8.7.11 R Module (Control Module For Chlorine Gas Metering Units)

A Stub cable
B Main BUS cable

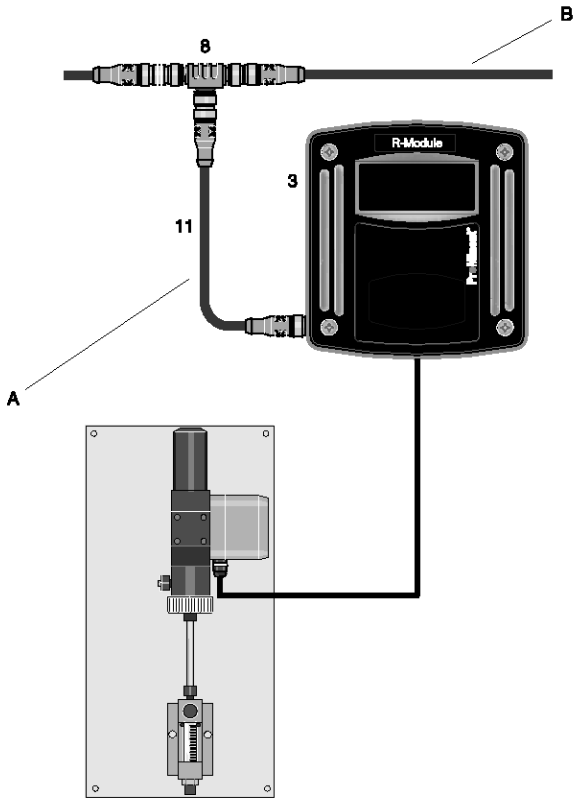

pk_5_043_C

The R module permits the control of chlorine gas metering units which are equipped with a position feedback potentiometer.

It includes 2 power relays for opening and closing and an input for a position feedback potentiometer 1 ... 10 kΩ

The R module is connected to other units via the main bus train.

For this connection, the T-distributor and the CAN connecting cable 0.5 m included in the scope of delivery are used.

The R module in the above example consists of the following components (without chlorine gas metering unit):

Item	Number	Designation	Order no.
3	1	R module DXMa R W 2 0 0 0 01	
8	1	T-distributor M12 5P CAN	included in delivery
11	1	Connecting cable - CAN, M12, 5P, 0.5 m	included in delivery

If you have any questions, please contact our sales department.

8.7.12 G-Module (Limit Value and Alarm Module)

A Stub cable
B Bus main cable

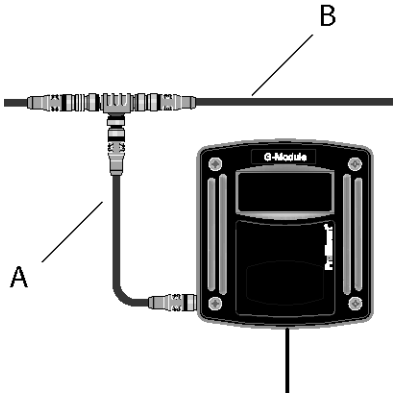

P_DM_0024_SW3

The G-module is a limit value and alarm emitting module with 2 potential-free changeover relays to signal alarm states. Each of the two relays has ten different setting options to monitor measured values for minimum and maximum values and, should the values exceed or fall below these limits, this then effects the relay. Both relays have the same setting options, thereby enabling signals for pre-warnings or shutdowns to be generated by the use of different delay periods.

The G module is connected to the other units via the main bus cable using the T-distributor and 0.5 m CAN connection cable supplied.

The G module in the above example consists of the following components:

Item	Quantity	Description	Order no.
3	1	G module DXMa G W 2 0 0 0 01	
8	1	T distributor M12 5-pin CAN	included
11	1	Connecting cable - CAN M12 5 pin 0.5 m	included

Please contact our Sales department with any queries.

8.7 Multi-Channel Measuring And Control System For Drinking Water And Swimming Pool Water Treatment

8.7.13 Identcode Ordering System CANopen Modules

Measurement Module for DULCOMARIN® II Series DXM

DXMa	Modul						
	M	M module, measuring module: pH, ORP, temperature					
	A	A module, control module: 3 pump and 4 analogue outputs					
	R	R module, control module: chlorine gas metering unit with feedback [1), 2)]					
	N	N module, mains power module without relay [1), 2)]					
	P	P module, mains power module with relay, only mounting type "0" [1), 2)]					
	I	I module, current input module, 3 mA inputs, 2 digital inputs					
		Installation					
		0	No housing, only P module (IP 00)				
		W	Wall mounting (IP 65)				
		E	Retrofit module (installation module for DXCa, IP 20)				
			Version				
			0	With controls (only M module, mounting type W)[1]			
			2	Without controls			
			3	Without contols (only mounting type “E” and “H”)			
				Application			
				0	Standard		
				S	Swimming pool (only M-module)		
				D	Drinking water/disinfection (only I module)		
					Language default		
					00	No controls [2)]	
					DE	German	
					EN	English	
					ES	Spanish	
					FR	French	
					IT	Italian	
						Approvals	
						00	No approval, only P-module without housing
						01	CE mark

Please note the following:

Upgrade modules for existing systems require a software update for the existing system. A Software Update Kit is needed to avoid any possible incompatibility between the different modules.

The update kit is free of charge and one is also needed when ordering more than one upgrade module. The kit includes an SD memory card with the current software for the DULCOMARIN® II and a description about how to perform the software update.

	Order no.
Update kit/DXC and modules	1031284

8.7.14 Spare parts and upgrade sets

Internal spare parts and upgrade sets for the DULCOMARIN® II cannot be ordered using the part number printed on the modules!

Modules have to be fully replaced (the exception to this is the N module).

The electrical unit for the central unit can only be replaced by a complete processor spare part.

Please use only the following identcodes when ordering Identcodes:

Replacement central units

- Replacement central unit: DXCAC001000#DE01 (without communications interface, # = please state "S" for applications in swimming pools and "D" for applications relating to drinking water).
- Replacement central unit: DXCAC051000#DE01 (with web server, # = please state "S" for applications in swimming pools and "D" for applications relating to drinking water).
- Replacement central unit: DXCAC061000#DE01 (with OPC and web server, # = please state "S" for applications in swimming pools and "D" for applications relating to drinking water).

External modules (replacement or upgrade modules):

- M module: DXMa M W 0 S EN 01 (with display)
- A module: DXMa AW2 0 00 01 (without display)
- N module: DXMa N W 2 0 00 01 (without display)
- R module: DXMa R W2 0 00 01 (without display)
- G module: DXMa G W2 0 00 01 (without display)
- P module: DXCa W 2 00 00 PS 00 01 (without display in large DXC housing)
- I module: DXMa I W 0 D D E 01 (with display)
- I module: DXMa I W 2 D 0 0 0 1 (without display)

Internal modules (replacement or upgrade modules):

- M module: DXMa M E3S 00 01
- A module: DXMa A E30 00 01
- P module: DXMa P03 00 00
- I module: DXMa I E 3 D 00 01
- N module: Order no. 732485, electrical set DXMaN 24 V/1A

8.7 Multi-Channel Measuring And Control System For Drinking Water And Swimming Pool Water Treatment

8.7.15 Diaphragm Metering Pumps With CANopen Bus Interface

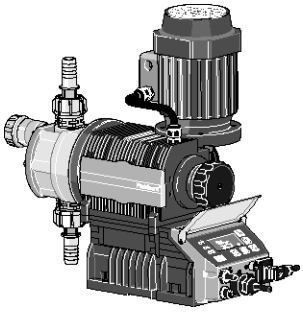

pk_2_001
Sigma/ 1

- CANopen bus interface for DULCOMARIN®II
- Feed rate range 0.74…32 l/h, 16…2 bar
- Stroke length continuously adjustable between 0 - 100 % (recommended 30 - 100 %)
- Transmission of the stroke length setting from DULCOMARIN® II
- Material versions PP, plexiglass/PVC
- Patented coarse / fine bleed valve for PP and plexiglass/PVC
- Self-bleeding liquid end version in PP and plexiglass/PVC
- Port for 2-phase level switch
- Version for extra-low voltage 12/24 V DC, 24 V AC
- 4 LED display for operation, warning and error messages
- Alarm for stroke length changes > ± 10 %
- Transmission of level alarm without alarm relay via the bus

For further informations: Beta® b Solenoid Diaphragm Metering Pumps → 1-11, delta® Solenoid-Driven Diaphragm Metering Pumps → 1-23, Sigma/ 1 Diaphragm Metering Pumps → 2-9, Sigma/ 2 Diaphragm Metering Pumps → 2-15, Sigma/ 3 Diaphragm Metering Pumps → 2-21



P_BE_0002_SW
Beta®

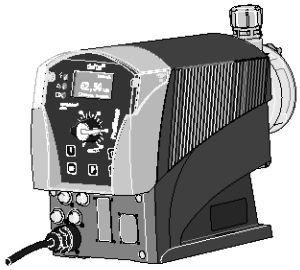

P_DE_0002_SW
delta®

8.7.16 Multi-Channel Measuring And Control System DULCOMARIN®II DULCO®-Net Module Combinations

Number and type of modules required for a given number of pools

Number filtration circuits	Central unit DXCa	P module	M module	A module*	Additional N or P module (power supply unit)	Sensor free chlorine	Sensor total chlorine - (optional)
1	1	1	1	1	-	1	1
2	1	1	2	2	-	2	2
3	1	1	3	3	1	3	3
4	1	1	4	4	2	4	4
5	1	1	5	5	2	5	5
6	1	1	6	6	3	6	6
7	1	1	7	7	3	7	7
8	1	1	8	8	4	8	8
9	1	1	9	9	4	9	9
10	1	1	10	10	5	10	10
11	1	1	11	11	5	11	11
12	1	1	12	12	6	12	12
13	1	1	13	13	6	13	13
14	1	1	14	14	7	14	14
15	1	1	15	15	7	15	15
16	1	1	16	16	8	16	16

* No A module if metering pumps with CANopen are used.
The above modules include all CAN bus connecting elements (T-distributor and spur line).
The T-distributors can also be directly coupled.
For distributed systems, CAN cable must be ordered by the metre with the by-the-metre connecting kit.

	Order no.
CAN (by the metre) – connection kit*	1026589
Connecting cable – CAN (by the metre)*	1022160

* The CAN by-the-metre connecting kit consists of a CAN coupling M12 5P and a CAN connector M12 5P and a wiring diagram.
The by-the-metre connecting cable can be configured into a cable of individual length using the CAN by-the-metre connecting kit.
One CAN by-the-metre connecting kit is required for each cable to be configured.
The connecting cables CAN M12 5P 0.5 m ?(pump 1 m) supplied with the sensors and modules must be used for the spur lines.

If you have any questions, please contact our sales department.

Caution:

The maximum main bus length (not including stubs) may be 400 m at the most.

8.7 Multi-Channel Measuring And Control System For Drinking Water And Swimming Pool Water Treatment

8.7.17 Configuration Example 1

A Masters room
B Systems room Pool 1
C Systems room Pool 2

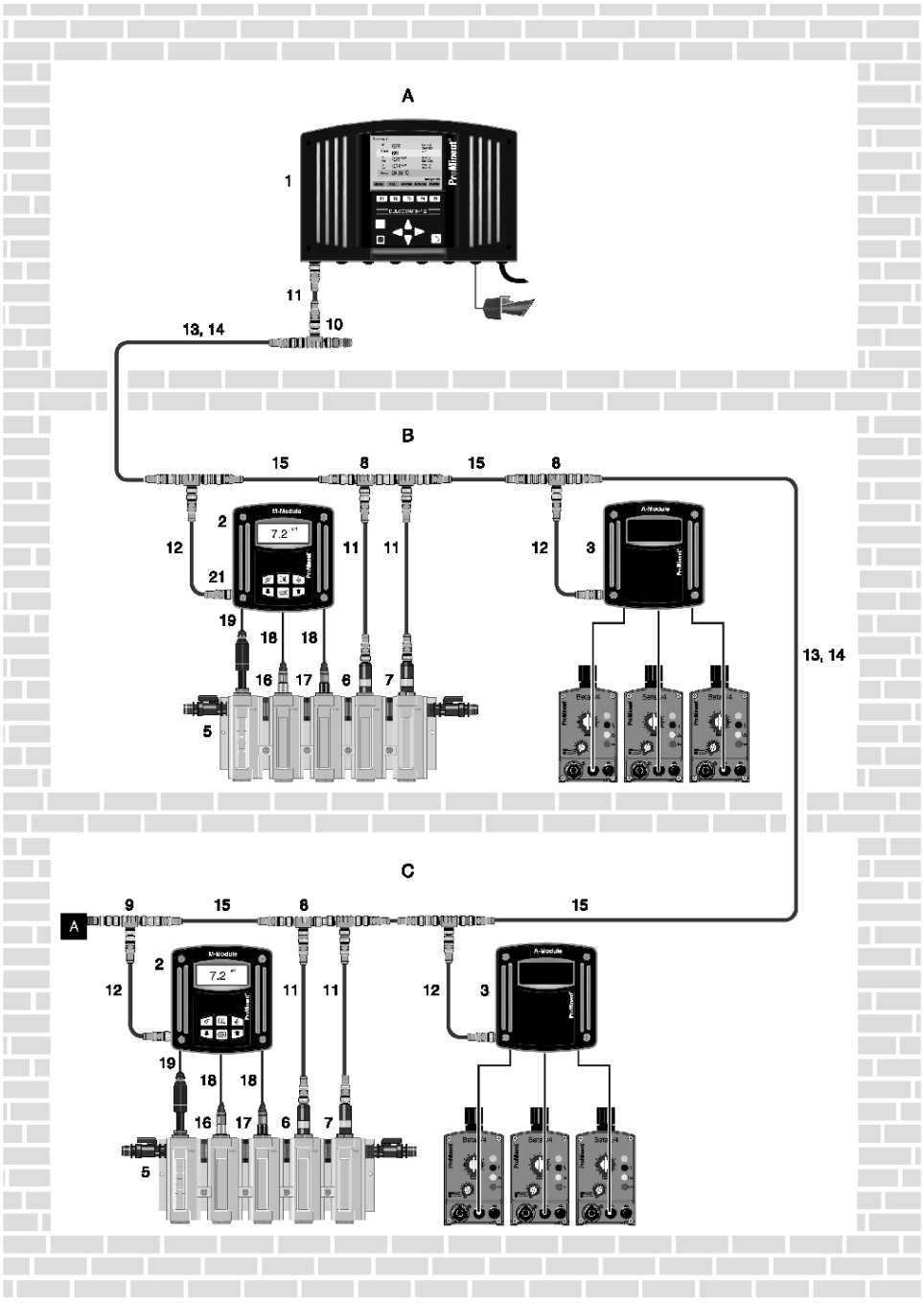

pk_5_022_1

8.7 Multi-Channel Measuring And Control System For Drinking Water And Swimming Pool Water Treatment

Measuring and control system for two drinking water systems/filtration circuits consisting of the following components:

Item	Number	Name	Order no.
1	1	DULCOMARIN® II central unit DXCa W 0 0 1 0 0 P S EN 01	–
2	2	M module DXMa M W 0 S EN 01	–
3	2	A module DXMa A W 2 0 00 01	–
5	2	DULCOTEST® in-line probe housing DGMa 3 2 2 T 0 0 0	–
6	2	Chlorine sensor CTE 1-CAN-10 ppm	1023427
7	2	Chlorine sensor CLE 3.1-CAN-10 ppm	1023426
8	9	T-distributor M12 5-pole CAN	supplied
9	1	Termination resistance M12 coupling	supplied
10	1	Termination resistance M12 plug	supplied
11	5	Connection cable - CAN M12 5-way 0.5 m	supplied
12	5	Connection cable - CAN M12 5-way 0.3 m	supplied
13	–	Connecting cable – CAN (by the metre)	1022160
14	–	CAN (by the metre) – connection kit	1026589
15	–	CAN M12 5-pole connection cable - length as required	–
16	2	pH sensor PHES 112 SE	150702
–	–	PHES 112 SE	150092
17	2	ORP sensor RHES-Pt-SE	150703
18	4	Cable combination coax 2 m- SN6 - pre-assembled*	1024106
19	4 m	Signal lead, sold by the meter 2 x 0.25 mm^2 Ø 4 mm	725122

* The CAN by-the-metre connecting kit consists of a CAN coupling M12 5P and a ?CAN connector M12 5P and a wiring diagram.
The by-the-metre connecting cable can be configured into a cable of individual length using the CAN by-the-metre connecting kit.
One CAN by-the-metre connecting kit is required for each cable to be configured.
The connecting cables CAN M12 5P 0.5 m (pump 1 m) supplied with the sensors and modules must be used for the spur lines.

Caution:

The maximum main bus length (not including spur lines) may be 400 m at the most.

8.7 Multi-Channel Measuring And Control System For Drinking Water And Swimming Pool Water Treatment

8.7.18 Configuration Example 2

Two M modules in central unit, use of metering pumps with CANopen bus.

A Swimming pool attendant's room
B Installations room/Pool 1
C Installations room/Pool 2

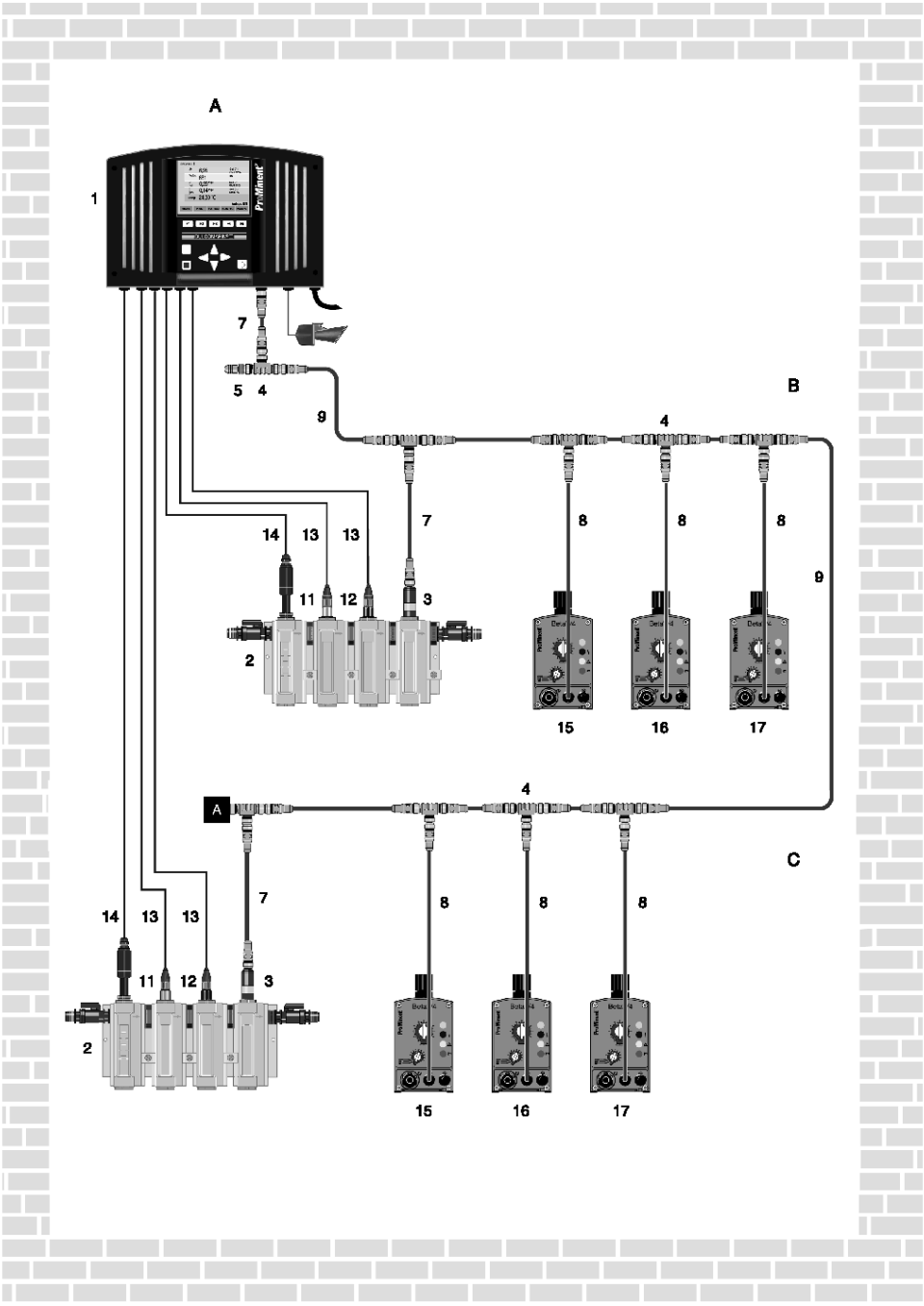

pk_5_022_2

8.7 Multi-Channel Measuring And Control System For Drinking Water And Swimming Pool Water Treatment

Measuring and control system for two filter circuits consisting of the following components:

Item	Number	Name	Order no.
1	1	DULCOMARIN®II central unit DXCa W 0 0 1 M M P S EN 01	–
2	2	DULCOTEST® in-line probe housing DGMa 3 2 2 T 0 0 0	–
3	2	Chlorine sensor CLE 3-CAN-10 ppm	1023425
4	9	T-distributor M12 5 pole CAN	included
5	1	Termination resistor M12 connector	included
6	1	Termination resistor M12 plug	included
7	5	Connection cable - CAN M12 5-pole 0.5 m	included
8	6	Connection cable - CAN M12 5-pole 0.3 m	included
9	–	Connecting cable – CAN (by the metre)	1022160
10	–	CAN (by the metre) – connection kit	1026589
11	2	pH sensor PHES 112 SE	150702
12	2	ORP sensor RHES-Pt-SE	150703
13	4	Cable combination coax 2 m- SN6 - pre-assembled*	1024106
14	4 m	Signal lead, sold by the meter 2 x 0.25 mm^2 Ø 4 mm	725122
15	2	Beta®/4CANopen for pH adjustment BT4A0402PPE200AA000D00**	–
16	2	Beta®/4CANopen for disinfectant BT4A0402NPB900AA000D00**	–
17	2	Beta®/4CANopen for flocculant BT4A0400PPE200AA000D00**	–
–	–	PHES 112 SE	150092

* The CAN by-the-metre connecting kit consists of a CAN coupling M12 5P and a CAN connector M12 5P and a wiring diagram.
The by-the-metre connecting cable can be configured into a cable of individual length using the CAN by-the-metre connecting kit.
One CAN by-the-metre connecting kit is required for each cable to be configured.
The connecting cables CAN M12 5P 0.5 m (pump 1 m) supplied with the sensors and modules must be used for the spur lines.

** Example configurations

Caution:

the maximum main bus length is 400 m

8.7 Multi-Channel Measuring And Control System For Drinking Water And Swimming Pool Water Treatment

8.7.19 Accessories For The Measuring And Control System DULCOMARIN® II compact And DULCOMARIN® II DULCO®-Net

	Order no.
CLE 3-CAN-10 ppm	1023425
CLE 3.1-CAN-10 ppm	1023426
CTE 1-CAN-10 ppm	1023427
CGE 2-CAN-10 ppm	1024420
BRE 3-CAN-10 ppm	1029660
T-distributor M12 5 pole CAN	1022155
Termination resistance M12 coupling	1022154
Termination resistance M12 plug	1022592
Connecting cable - CAN M12 5 pole 0.3 m	1024568
Connecting cable - CAN M12 5 pole 0.5 m	1022137
Connecting cable - CAN M12 5 pole 1 m	1022139
Connecting cable - CAN M12 5 pole 2 m	1022140
Connecting cable - CAN M12 5 pole 5 m	1022141
Connecting cable – CAN (by the metre)	1022160
CAN (by the metre) – connection kit	1026589
PHES 112 SE	150702
RHES-Pt-SE	150703
Cable combination coax 0.8 m - pre-assembled*	1024105
Cable combination coax 2 m- SN6 - pre-assembled*	1024106
Cable combination coax 5 m- SN6 - pre-assembled*	1024107
Signal lead, sold by the meter 2 x 0.25 mm² Ø 4 mm	725122
Connecting cable LAN M12 - RJ45 5.0 m	1026715
Cross-over patch cable 2x RJ45 connector 5 m	1027859
LAN coupling 2x RJ45 socket 1:1	1027860
USB 2.0 SD card reader	732981
SD memory card/DXC measuring data archiving	1027470
Isolating amplifier 4-channel for mA outputs of the A module	1033536

* The CAN by-the-metre connecting kit consists of a CAN coupling M12 5P and a CAN connector M12 5P and a wiring diagram.
The by-the-metre connecting cable can be configured into a cable of individual length using the CAN by-the-metre connecting kit.
One CAN by-the-metre connecting kit is required for each cable to be configured.
The connecting cables CAN M12 5P 0.5 m (pump 1 m) supplied with the sensors and modules must be used for the spur lines.

Caution:

The maximum main bus length is 400 m.

Sensor selection table

Sensor	**Measurement task** Measurement **free**chlorine **for small percentage of** combined chlorine. Calibration method DPD 1	Measurement **free** chlorine **for large percentage of** combined chlorine. Calibration method DPD 1	Measurement **combined** chlorine **and free chlorine** (differential chlorine measurement) Calibration method DPD 1+3	Measurement **total chlorine** chlorine (e.g. trichlorinated isocyanuric acid) Calibration method DPD 1	Measurement **Bromine** BCDMH DBDMH DPD1 or DPD1+3
CLE3-CAN-10 ppm (Order no.: 1023425)	**X**				
CLE3.1-CAN-10 ppm (Order no.: 1023426)		**X**	**X**		
CTE1-CAN-10 ppm * (Order no.: 1023427)			**X**		
CGE2-CAN-10 ppm (Order no.: 1024420)				**X**	
BRE3-CAN-10 ppm (Order no. 1029660)					**X**

* the CTE1-CAN-10 ppm sensor only works together with the CLE3.1-CAN-10ppm sensor

8.7 Multi-Channel Measuring And Control System For Drinking Water And Swimming Pool Water Treatment

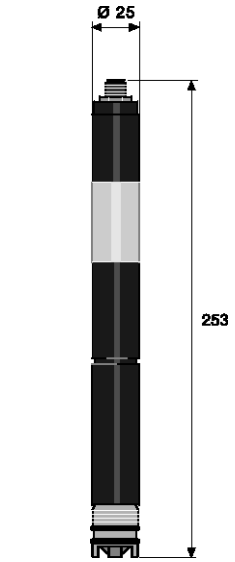

pk_6_096

CLE 3-CAN

Sensor for connection to a CANopen interface (e.g. DULCOMARIN® II swimming pool controller)

Measured variable	free chlorine (hypochlorous acid HOCl)
Reference method	DPD1
Measuring range	0.01…100 mg/l (auto ranging)
pH range	5.5 … 8.0
Temperature	5 … 45 °C
Max. pressure	1.0 bar
Intake flow	30…60 l/h (in DGM or DLG III)
Power supply	via CAN-interface (11 – 30 V)
Temperature measurement	via integrated digital semiconductor element
Output signal	uncalibrated, temperature compensated, electrically isolated
Compatibility	CANopen bus systems

	Order no.
CLE 3-CAN-10 ppm*	1023425

* Complete with 100 ml electrolyte, connecting cable - CAN M12 5-pin 0.5 m, T-distributor M12 5-pin CAN

CLE 3.1-CAN

Sensor for connection to a CANopen interface (e.g. swimming pool controller DULCOMARIN® II)

Measured variable	free chlorine (hypochlorous acid HOCl) with large proportions of bound chlorine; to detect bound chlorine using DULCOMARIN® II and Sensor for Total Chlorine type CTE 1-CAN
Reference method	DPD1
Measuring range	0.01…10.0 mg/l
pH range	5.5 … 8.0
Temperature	5 … 45 °C
Max. pressure	1.0 bar
Intake flow	30…60 l/h (in DGMa or DLG III)
Power supply	via CAN-interface (11 – 30 V)
Temperature measurement	via integrated digital semiconductor element
Output signal	uncalibrated, temperature compensated, electrically isolated
Compatibility	CANopen bus systems

	Order no.
CLE 3.1-CAN-10 ppm*	1023426

* Complete with 100 ml electrolyte, connecting cable - CAN M12 5-pin 0.5 m, T-distributor M12 5-pin CAN

CTE 1-CAN

Sensor for connection to a CANopen interface (e.g. DULCOMARIN® II swimming pool controller)

Measured variable	total chlorine
Reference method	DPD4
Measuring range	0.01…10.0 mg/l
pH range	5.5 … 9.5
Temperature	5 … 45 °C
Max. pressure	3.0 bar
Intake flow	30…60 l/h (in DGMa or DLG III)
Power supply	via CAN interface (11 – 30 V)
Temperature measurement	via built-in semiconductor device
Output signal	uncalibrated, temperature-compensated, electrically isolated
Compatibility	CANopen bus systems

Note: The CTE1-CAN-10 ppm sensor only works together with the CLE3.1-CAN-10ppm sensor

	Order no.
CTE 1-CAN-10 ppm*	1023427

* Complete with 100 ml electrolyte, connecting cable - CAN M12 5-pin 0.5 m, T-distributor M12 5-pin CAN

8.7 Multi-Channel Measuring And Control System For Drinking Water And Swimming Pool Water Treatment

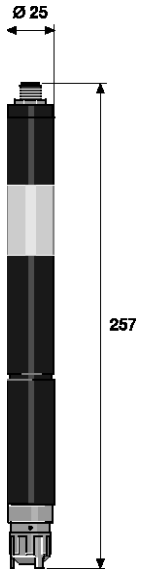

pk_6_084

CGE 2- CAN

Sensor for connection to a CANopen interface (e.g. DULCOMARIN® II swimming pool controller)

Measured variable	organic bound chlorine and free chlorine (e. g. trichlorinated isocyanuric acid)
Reference method	DPD1
Measuring range	0.01…10.0 mg/l
pH range	5.5 … 9.5
Temperature	5 … 45 °C
Max. pressure	3.0 bar
Intake flow	30…60 l/h (in DGMa or DLG III)
Power supply	via CAN interface (11 – 30 V)
Temperature measurement	via built-in semiconductor device
Output signal	uncalibrated, temperature compensated, electrically isolated
Compatibility	CANopen bus systems

	Order no.
CGE 2-CAN-10 ppm*	1024420

* Complete with 100 ml electrolyte, connecting cable - CAN M12 5-pin 0.5 m, T-distributor M12 5-pin CAN

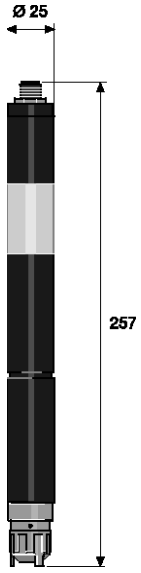

pk_6_084

BRE 3-CAN

Sensor for connection to CAN interface (e.g. swimming pool controller DULCOMARIN® II)

Measured variable	Total available bromine
Reference method	DBDMH, free bromine: DPD1 BCDMH: DPD4
Measuring range	0.02…10.0 mg/l
Temperature	5 … 45 °C
Max. pressure	3.0 bar
Intake flow	30…60 l/h (in DGM or DLG III)
Power supply	via CAN interface (11 – 30 V)
Output signal	uncalibrated, temperature-compensated, electrically isolated

	Order no.
BRE 3-CAN-10 ppm	1029660

* Complete with 100 ml electrolyte, connecting cable - CAN M12 5-pin 0.5 m, T-distributor M12 5-pin CAN

8.7 Multi-Channel Measuring And Control System For Drinking Water And Swimming Pool Water Treatment

8.7.20 Technical Data For The Multi-Channel Measuring And Control System DULCOMARIN®II compact And DULCO®-Net

Measurement range	pH -1...15 ORP: -1,200 ... +1,200 mV Chlorine, free 0.01...10 ppm/100 ppm Chlorine, total 0.01...10 ppm Chlorine, combined 0.01... 2.00 ppm
Temperature	-20 … 150 °C Pt 100 or Pt 1000
Resolution	0.01 pH / 1 mV / 0.01 ppm / 0.1 °C
Accuracy	0.5% of the final value of the measuring range (at 25 °C)
Measurement input	ph and ORP via terminal mV Chlorine via CANopen bus
Control characteristic	P/PI/PID control, intelligent control
Control	Acid and/or alkali and chlorine (2 control circuits), temperature
Digital inputs	5 potential-free inputs (sample water, pause, 3 pump failures, 2nd parameter set)
Signal current output	4 x 0/4-20 mA max. load 600 Ω range adjustable. **For connection to units which are not electrically isolated, an isolating amplifier, e.g. order no. 1033536, is required!**
Control outputs	3 Reed contacts for acid, alkali or flocculants and chlorine (pulse frequency to control metering pumps) 3 relays (pulse length) contact type changeover to control solenoid valves or peristaltic pumps
Alarm relay	250 V ~3 A, 700 VA contact type, changeover
Interfaces	LAN, SD-expansion slot
Electrical connection	85...265 V~, 50/60 Hz
Permissible ambient temperature	-5…45 °C
Storage temp.	-10…70 °C
Enclosure rating	IP 65
Climate	Permissible relative humidity: 95% non-condensing DIN IEC 60068-2-30
Dimensions H x W x D	227 x 342 x 78 mm

Compliance of all devices with CANopen specifications:

On the hardware side, all devices comply with the harmonised CAN specification 2.0 (ISO99-1, ISO99-2). This includes the CAN protocol (ISO 11898-1) and details on the physical layer in compliance with ISO 11898-2 (high speed CAN up to 1 Mbit/sec) and ISO 11898-3 (low speed CAN up to 125 kBit/sec). The unit complies with the CAN-Open specification CIA-DS401 that forms the basis of the European standard EN50325-4 and also complies with the controller device profile CiA-404.

8.8 Controller with integral metering pump

8.8.1 Controller with integral metering pump

Controllers with integral metering pump for pH, redox, type D_4a are no longer available and have been superseded by delta® metering pumps with control modules.

Information about the delta® metering pump with control module can be found in Chapter delta® Solenoid-Driven Diaphragm Metering Pumps, see page → 1-23

8.9 Cooling Tower And Boiler Controller

8.9.1 Cooling Water Treatment

Cooling circuits are used in diverse industries, in office buildings and shopping malls around the world.

If a flow-type cooling with fresh water is not feasible, a circulating cooling system is used.

In this respect, the cooling water consumption has to be reduced.

From the operator's point of view it is necessary to protect the heat exchanger and the entire piping against corossion and deposits to maximise the availability of the system.

Deposits and biological growth reduce the efficiency of the heat exchanger and increase the consumption of cooling water and thus also the operating costs.

Negative effects on the environment and the formation of legionella must be prevented.

In the circulating cooling, the loss caused by evaporation and exhaust air is replaced by make-up water.

The increase in salt concentration caused by evaporation is compensated for by bleeding and addition of make-up water. The bleed is controlled on the basis of the conductivity in the circulating water.

The deposition of biofilms is prevented by a time-controlled metering of biocides.

Corrosion is prevented by a volume-proportional metering of corrosion inhibitors and dispersants to the make-up water.

Function Description

The DULCOMETER® ProMcon, Cool Control and MultiFlex M10 are compact systems for cooling tower control.

They include all necessary functions to control bleed, metering of up to two biocides and corrossion inhibitors.

The bleed is controlled on the basis of the conductivity measured in the circulating water.

The inhibitor pump is controlled depending on the make-up water quantity which is detected using a contact water meter.

The desired concentration of the inhibitor is determined by the cooling tower control based on the operating time of the metering pumps.

The controllers can control up to two biocide pumps independently of each other via a timer.

Wet cooling tower

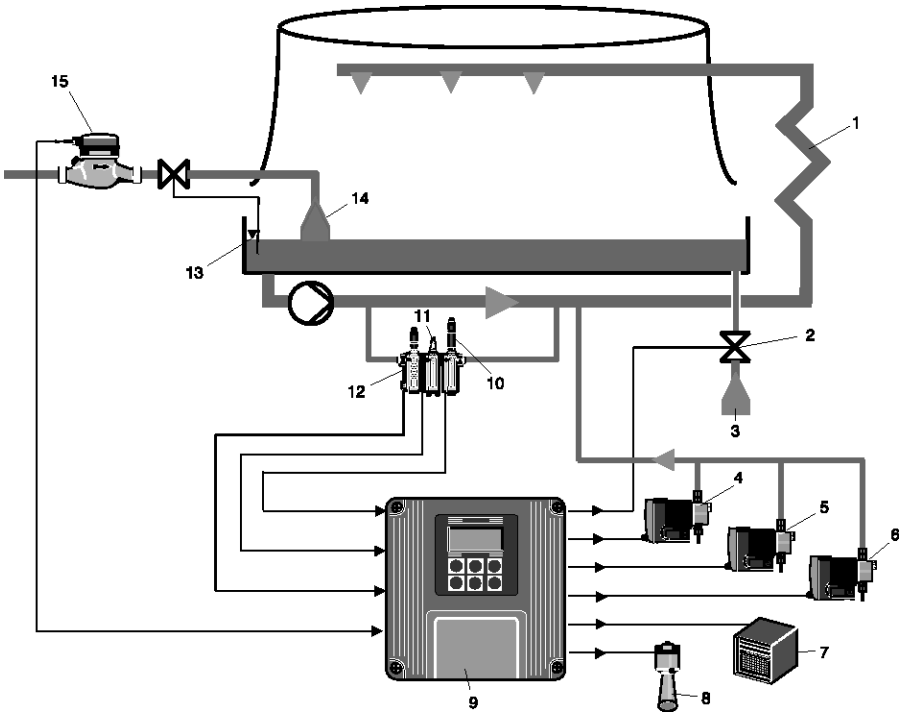

pk_5_011

1 Heat exchanger
2 Desalination valve
3 Outlet
4 Biocide 1
5 Biocide 2
6 Inhibitor
7 Recorder
8 Siren
9 Cool-Control
10 Conductivity sensor
11 Pt 100
12 Flow monitor
13 Float switch
14 Intake
15 Contact water meter

8.9 Cooling Tower And Boiler Controller

The controls include the following basic functions:

- Pre-bleed prior to planned biocide metering. Biocides with an oxidising effect increase conductivity in the cooling systems.
- Bleed lock-out on completion of biocide metering to let the biocide take effect
- Limitation of maximum duration of desalination
- Emergency mode in the event of failure of the conductivity measurement

Function	ProMcon	Cool Control	MultiFlex M10T
Bleed based on measured variables using:			
Conductivity, conductive	✔	✔	✔
Conductivity, inductive		✔	✔
Voltage supply			
115 V~	✔	✔	✔
230 V~	✔	✔	✔
Method of installation, Enclosure rating			
Wall mounting IP 65	✔	✔	✔
Panel mounting IP 54		✔	
Number of cooling towers/steam generators			
One cooling tower	✔	✔	
Up to 4 cooling towers or steam generators			✔
Metering of biocides			
up to 2 biocides	✔	✔	✔, per cooling tower
Inhibitor			
1 inhibitor	✔	✔	✔, per cooling tower
Pre-bleed	✔, dependent on measured value	✔, dependent on measured value	✔, dependent on measured value
Control			
Control 2nd measured variable, such as pH, redox, bromine or chlorine	✔		✔
Activation of bleed valve			
1 relay output for solenoid valve or motor-driven actuator with automatic reset	✔	✔, with two biocides	✔
2 OPEN/CLOSED relay outputs for motor-driven actuators		✔	✔
Corrosion measurement			
Various metals, for instance stainless steel, copper, mild steel, admiralty metal			✔
Outputs			
analog output 0/4…20 mA	✔, 2	✔, 1	✔, up to 5
Special functions			
Subsequent function extension via plug-in modules			✔
LAN connector with web server			✔, standard
Analog modem V.90	✔		✔
"Surveillor" PC operating and configuration software	✔		
"Trackster" PC operating and configuration software			✔

8.9 Cooling Tower And Boiler Controller

8.9.2 Cooling Tower Control ProMcon



P_DM_0018_SW

- Control of bleed via conductivity measurement or measurement of the make-up water quantity
- Control of one inhibitor
- Metering of up to 2 biocides via metering pumps or bromine sluice
- Automatic switching between summer/winter
- Timer with 4x8 events per cycle
- Pre-bleed and bleed lock-out
- Contact water meter input with adjustable pulse spacing
- Connection of a second measured variable via mA, for instance pH or chlorine or bromine or conductivity via mA
- Pause input to stop the controller
- Digital input to monitor circulation
- 2 standard signal outputs, 0/4…20 mA for conductivity and 2nd measured variable
- Alarm relay for alarm signalling
- Adjustable alarm limit values for measured value conductivity
- Wall mounted IP 65
- Optionally with a modem
- Optional "Surveillor" PC operating and configuration software for operation and configuration of the ProMcon controller; measured value history and retrieval via analogue telephone line or by direct connection to a PC via an RS 485 interface.

Applications:

- Cooling tower
- Air conditioning systems

	Order no.
ProMcon cooling tower controller 230 V without modem	1034730
ProMcon cooling tower controller 115 V without modem	1034731
ProMcon 230 V cooling tower control with analogue V.90 modem	1036019
ProMcon 115 V cooling tower control with analogue V.90 modem	1036018
ProMcon Software Surveillor PC software (English)	1036424

8.9 Cooling Tower And Boiler Controller

8.9.3 Technical Data

Measurement range	0…100/1,000 µS/cm and 20 mS/cm
Cell constant	0.01…10.0 (depending on the measuring range)
Accuracy	0.5 % of measuring range
Measurement frequency	56 Hz … 2.7 kHz
Measurement input	Terminal for conductive 2-electrode sensor
Correction variable	Temperature
Correction range	0 … 100 °C
2. measuring input	4…20 mA terminal for inductive 2-electrode sensor, pH-/ORP over measuring transducer, chlorine, bromine, or ozone sensor
Control characteristic	Desalination: 2-point controlling with hysteresis
Signal current output	2 x 0/4-20 mA, electrically isolated max. load 500 Ω Range adjustable for measured value
Control outputs	3 power relays to control one inhibitor and two biocide pumps 1 power relay to control a desalination valve
Alarm relay	250 V ~2 A, 700 VA contact type changeover
Electrical connection	~=/115 V~ or 230 V~ ±10 %
Ambient temperature	wall mounted: 0…45 °C
Enclosure rating	Wall mounted: IP 65
Dimensions	Wall mounted: 189 x 200 x 76 mm (WxHxD)

	Order no.
Mounting kit for control panel installation	792908

A complete measuring station comprises the following:

- Measuring transducer / controller ProMcon
- Conductivity sensor with integrated temperature compensation LFT 1 DE or LMP 1
- Fitting: DGMa..., DLG III ..., immersible inline sensor fitting
- Temperature sensor Pt 100
- Sensor cable

(for further informations:
DULCOTEST® Conductivity Sensors see p. → 7-48;
Immersion Probe Fittings see p. → 7-71;
Temperature Sensors see p. → 7-25;
Sensor Accessories see p. → 7-62)

8.9 Cooling Tower And Boiler Controller

8.9.4 Cooling Tower Controller Cool-Control, Type D1Ca





pk_5_006_1

- Control of bleed
- Metering of the inhibitor
- Metering of up to 2 biocides via metering pump or bromine lock
- Daily and 2-weekly timer
- Pre-bleed and bleed lock-out
- Calibration function for metering pumps
- Water meter input with adjustable pulse spacing
- Pause input to lock the measuring in-line measuring probe
- Signal output for conductivity 0/4…20 mA, electrically isolated
- Alarm relay for alarm signalling
- Adjustable alarm limit values for measured value conductivity
- Wall and control panel mounting housing

Applications:

- cooling tower,
- air scrubbers
- air condition systems

A complete measuring station comprises the following:

- D1Ca measuring transducer /controller (see Identcode)
- In-line probe housing: DGMa..., DLG III ..., immersible in-line probe housing
- Conductivity sensor
- Sensor cable

(for further informations:
Immersion Probe Fittings see p. → 7-71; DULCOTEST® Conductivity Sensors see p. → 7-48;
Sensor Accessories see p. → 7-62)

8.9.5 Identcode Ordering System, Cool-Control, Type D1Ca

DULCOMETER® Cool-Control, type D1Ca

D1Ca	Installation													
	D	Control panel version 96 x 96 mm (IP 54)												
	W	Wall mounted (IP 54)												
		Power supply												
		0	230 V, 50/60 Hz											
		1	115 V, 50/60 Hz											
		4	24 V, AC/DC											
			Measured variable											
			K	Conductivity for cooling tower control										
				Measured variable connection										
				3	Conductive conductivity sensor terminal									
				6	Terminal inductive conductivity sensors									
					Correction variable (temperature)									
					0	None								
					2	Temperature via terminal (Pt 100 form conductivity sensor LFT, LM, ICT)								
					4	Manual temperature input								
						Disturbance variable								
						0	None							
						2	Flow as frequency 0-500 Hz (contact water meter)							
							Control input							
							0	None						
							1	Pause						
								Signal output						
								0	None					
								1	0/4-20 mA measured value (conductivity)					
									Relay control					
									G	Alarm, timer and 2 output relays (bleed valve and biocide 2)				
									S	Alarm and servomotor (bleed valve only)				
										Pump control				
										2	2 pumps(inhibitor and biocide 2)			
											Control characteristic			
											0	2-point control with hysteresis/bleed		
												Protocol output		
												0	None	
													Language	
													D	German
													E	English
													F	French
													G	Czech
													S	Spanish

8.9 Cooling Tower And Boiler Controller

8.9.6 Technical Data

Measurement range	0…500/2000/5000 µS/cm, 20 mS/cm measured variable L3 0…200/0…2000 µS/cm, 0…20/200/2000 mS/cm measured variable L6
Cell constant	0.006 … 12.0 (depends on measurement range)
Resolution	0.0625 % of input range
Accuracy	0.5 % from measurement range
Measurement frequency	56 Hz … 2.7 kHz
Measurement input	terminal (conductive 2- and 4-electrode sensors or/inductive conductivity sensors)
Correction variable	temperature
Correction range	0 … 100 °C
Control characteristic	2-point control with hysteresis
Signal current output	1 x 0/4-20 mA electrically isolated max. load 600 Ω adjustable measured variable range
Control outputs	2 reed contactsfor control for inhibitor and biocide pump 1 2 relays for control of biocide pump 2 and desalination valve
Alarm relay	250 V ~3 A, 700 VAcontact type make/break
Electrical connection	24 V ~=/115 V~/230 V~ ±10 %
Ambient temperature	Panel mounted: 0…50 °C (0…45 °C fully dismantled) Wall mounted: -5…50 °C (-5…40 °C fully dismantled)
Enclosure rating	panel mounted: IP 54 wall mounted: IP 65
Dimensions	panel mounted: 96 x 96 x 140 mm (WxHxD) wall mounted: 189 x 200 x 76 mm (WxHxD)

	Order no.
Mounting kit for control panel installation	792908

A complete measuring station comprises the following:

- D1Ca measuring transducer /controller (see Identcode)
- Conductivity sensor
- In-line probe housing: DGMa..., DLG III ..., immersible in-line probe housing
- Pt 100 temperature sensor or on-site standard signal
- Sensor cable

(for further informations:
DULCOTEST® Conductivity Sensors see p. → 7-48;
Immersion Probe Fittings see p. → 7-71;
Temperature Sensors see p. → 7-25;
Sensor Accessories see p. → 7-62)

8.9 Cooling Tower And Boiler Controller

8.9.7 Cooling Tower/Boiler Controller MultiFlex M10

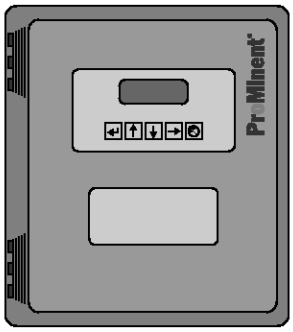

P_DM_0017_SW

The high-performance features

- Simultaneous control of up to 4 cooling towers and/or steam generators
- Configuration via display and keyboard using a standard web server (to be operated only via a web browser, e.g. Internet Explorer, no special software required)
- LAN/Ethernet interface
- Up to 14 analog inputs and outputs
- 12 digital inputs (standard)
- 10 relay outputs (standard)

Simple to operate

- 5-key universal keyboard
- Illuminated display with 4 lines, each with 20 characters
- Simple to upgrade with I/O plug-in modules
- Free adaptation to the process thanks to flexible programmability
- Comprehensive flexibility of the control permits cooling towers or steam generators (e.g. 1 steam generator and 3 cooling towers) to be controlled
- Standard built-in Ethernet/LAN interface with user-specified IP address

Applications

- Cooling tower
- Boiler

The Software Trackster 3 (optional)

Convenient configuration and remote control via the Trackster 3 software.

Together with the embedded web server, the Trackster 3 software is the programming and control software for the Multiflex controllers for cooling towers and steam boilers. Trackster 3 offers you the tools for real-time visualisation of simple to complex water treatment systems. Trackster 3 permits time- or event-controlled report generation, data import and export, manual data input, alarm logging and tools for controller networks.

Housing

- Enclosure rating: NEMA4X, IP65, fibreglass housing with two spring locks
- 230 V AC or 115 V AC selectable via a switch
- Approvals: CE, CSA, UL

The MultiFlex M10 controller is not listed in our price list and we would be pleased to send you a separate quotation on request.

	Description	Remarks
Inputs and outputs		
Analog inputs and outputs	14 analog inputs and outputs for sensors or measuring units	Automatic configuration and driver installation or deactivation
Digital inputs	12 units (standard)	User-definable as a contact water meter input or as a contact input to activate functions
Relay outputs	10 units: 2 as closers, 8 as changeovers (standard)	Protection in groups of up to 5 relays
Alarm relay	Potential-free, without protection	Can be configured by the user as NO or NC

8.9 Cooling Tower And Boiler Controller

	Description	Remarks
Communication / User interface		
Keypad and LCD display	Universal keypad with 5 keys 4 lines x 20 characters with illumination	Sample rate of 100 mS (nominal) User-adjustable contrast
10Base T, TCP/IP Ethernet / LAN	HTML, Telnet micro web server Fixed adjustable IP address and & port settings	The embedded web server displays the control values in real time and permits the unit to be configured
Modem (optional)	56K, V.90 Remote Telnet Access	Automatic alarm signal to pager, mobile phone or PC
Data logging	600 memories for each of the 26 inputs & 10 relays, saved in XML format	Recording rate adjustable from 5 to 1,440 minutes
Operating language	English, other languages available on request	

	Description	Remarks
Control / Controller		
ON/OFF relay	ON / OFF control	Each individual relay can be freely assigned to a function
Proportional output 4-20 mA (optional)	User-defined setting by sensor or relay controller	Adjustment of zero point and range transmission value
Cooling tower: volumetric desalination	User-definable volume unit of measure & metering pumps ON time	Periodic desalination: measures the make-up water volume and then initiates volume-dependent desalination based on user specifications
Boiler: Captured sample	Cycle sampling / measurement / blow-down / repeated sampling based on user specification	Any sensor can be used
Locking	1 to 12 contact input, AND & OR linking	Relay OFF if contact input open
Lock	If relays 1 to 10 are activated, every other relay can be locked (e.g. desalination lock)	Supports the combined metering of oxidising agent and inhibitor
Alarm - Metering time limit	Time per actuation and day	User-defined metering time limitation
Metering monitor (optional)	Concentration calculated on the basis of metering quantity & concentration factor	The metering monitor responds if, for instance, no chemical flow can be measured after 30 seconds of metering pump operation

	Description	Remarks
System		
Electrical data	115 / 230 V AC, 50/60 Hz	Voltage range can be switched
Fuse	7.3 A at 120 V AC 4.15 A at 240 V AC	Relay protection: Relay 1-5 and relay 6-10 each with 6.3 A
Over-voltage protection	Relay 2-5 and 7-10 NO contact, snubber with 0.1 µF	The processor is electrically isolated from the voltage supply
Supply voltage of accessories	15-22 V DC, unregulated, thermically protected with 200 mA	
Housing	Plastic, NEMA4X, IP65	W x H x D = 30 x 35 x 18 cm

	Description	Remarks
Certification		
CSA: 1523642	CSA-tested, complies with CE guidelines	CSA tested to comply with UL 61010C-1

8.10 DULCOMETER® Transmitters

8.10.1 Measured Variables pH, ORP, Chlorine, Temperature, Conductivity, Measuring Transducer DMTa

DULCOMETER® DMT type transmitters are compact 2-wire transmitters for measured variables pH, ORP, chlorine, conductive conductivity, temperature. Easily combined with programmable memory controllers.

Summary of advantages

- Reliable measurement due, e.g., to symmetrical input for pH and redox signals
- High level of operating safety, e.g. sensor monitoring (pH), electrical isolation
- Simple flexible installation
- Full text user guidance
- Automatic buffer recognition (pH)
- Autoranging (conductivity)
- Compact design
- Switch between pH, redox and temperature

Applications

- process control
- food and beverage industry
- chemical industry
- pharmaceutical industry
- water treatment
- waste water treatment
- power stations

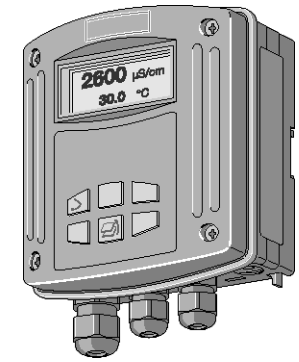

pk_5_001

Technical Data

Measurement range	pH - 1.00 … 15.00 - 1200 … +1200 mV redox voltage 0.01 … 5.0 mg/l chlorine -20 … +150 °C 1 µS/cm … 200 mS/cm (autoranging), corresponding to cell constant
Cell constant	0.006 … 12.0/cm for conductivity
Resolution	0.01 pH 1 mV 0.1 % from measurement range for chlorine 0.1 °C Conductivity 1/1000 of display value (min. 0.001 µS/cm)
Accuracy	0.5 % from measurement range
Measurement input	mV terminal (pH, Redox); imput resistance > 5 x 10^{11} Ω Chlorine terminal (DMT chlorine sensors) Pt 100/1000 terminal Conductivity terminal (2 or 4 wire connector)
Correction variable	Temperature via Pt 100/1000 (pH, chlorine, conductivity)
Correction range	chlorine: 5 … 45 °C, pH: 0 … 100 °C, LF: 0 … 100 °C
Current output	4…20 mA
Fault current	23 mA
Feed voltage	2-wire transmitter, 16 … 40 V DC, nominal 24 V PROFIBUS®-DP version, 16 … 30 V DC, nominal 24 V
Communication interface	PROFIBUS®-DP (wall-mounted version only)
Permissible ambient temperature	0…55 °C
Climate	up to 95 % relative humidity (non-condensing)
Enclosure rating	IP 65 (wall/pipe mounted) IP 54 (control panel installation)
Display	graphical display
Housing material	PPE
Dimensions H x W x D	135 x 125 x 75 mm
Weight	0.45 kg

A complete measuring station comprises the following:

- Measuring transducer DMTa (see Identcode)

8.10 DULCOMETER® Transmitters

- In-line probe fitting: DGMa..., DLG III ..., immersible in-line probe fitting
- Chlorine sensor (dependent on Identcode)
- Assembly set for chlorine sensor
- pH sensor (dependent on Identcode)
- Redox sensor (dependent on Identcode)
- Temperature sensor Pt 100 /Pt 1000 (dependent on Identcode)
- Conductivity sensor
- Sensor cable
- PROFIBUS®-DP connection accessories

(for further informations: Immersion Probe Fittings see p. → 7-71; Chlorine Sensors see p. → 7-27; pH Sensors With SN6 Or Vario Pin see p. → 7-11; ORP Sensors With Fixed Cable see p. → 7-23; Temperature Sensors see p. → 7-25; DULCOTEST® Conductivity Sensors see p. → 7-48; Sensor Accessories see p. → 7-62; Flow Meter, Dosing Monitor, Signal Cable see p. → 1-74)

8.10.2 Identcode Ordering System Measuring Transducer DMTa

DULCOMETER® Transmitters

DMT	Series												
	A	Version											
		Installation											
		W	Wall mounted (also pillar mounted)										
		S	Control panel installation[1)]										
			Version										
			0	With ProMinent® logo									
				Power supply									
				9	Current loop 4-20 mA (two wire technology), operating voltage 16...40 V DC, nominal 24 V DC (only if communication point = none)								
				5	PROFIBUS® DP, operating voltage 16…30 V DC, nominal 24 V DC (only if communication interface = PROFIBUS® DP)								
					Communication interfaces								
					0	None							
					4	PROFIBUS® DP (assembly type W only)							
						Measured variable 1							
						P	pH						
						R	Redox						
						T	Temperature						
						C	Chlorine						
						L	Conductivity						
							Measured variable 2 (Correction variable)						
							1	Temperature Pt 1000/Pt 100					
							0	None (in the case of measured variable T)					
								Enclosure rating					
								0	Standard				
									Language				
									D	German			
									E	English			
									F	French			
									S	Spanish			
									I	Italian			
										Presetting A, probe			
										0	Standard ProMinent® buffer solution pH 4-7-10		
										D	Ref. buffer DIN 19266 pH 4-7-9		
										V	Variable buffer recognition		
											Presetting B, probe		
											0	Autom. temperature measurement (standard)	
											1	Manual temperature measurement	
											2	Autom./manual temperature measurement	
											9	No temperature measurement	
												Presetting C, output	
												0	Prop. measured variable (standard)
												1	Manual adjustable current value
												2	Proportional or manual
												3	Proportional or manual hold
												4	4 mA constant current

The last four figures in the Identcode represent the software defaults, e.g. cell constants for conductivity, temperature compensation, etc.

0 = standard parameters

The measuring transducer can be factory-set. The defaults can be easily changed in the operating menu.

Note:

1 The rear housing part does not exist for control panel mounting.

8.10 DULCOMETER® Transmitters

8.10.3 DULCOMETER® DULCOPAC

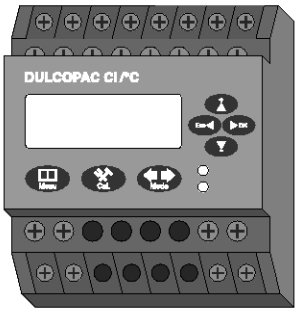

P_DM_0023_SW

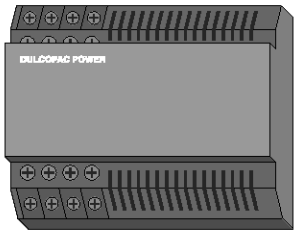

P_DM_0021_SW

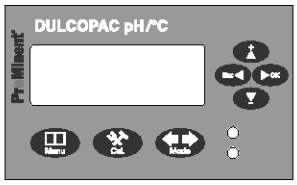

P_DM_0022_SW

NEW

DULCOPAC transmitter/controller in a DIN housing for installation on a top hat rail (in the controls cabinet)

DULCOPAC measures and controls the measured variables: pH, ORP, chlorine, bromine, peracetic acid, hydrogen peroxide and conductivity in aqueous solutions. Applications include the general treatment of water and waste water.

The transmitter/controller has a sensor input for the relevant measured variable. With pH and ORP, it is possible to select between a DULCOPAC transducer with a highly-ohmic coaxial input (direct connection of a pH/ORP sensor) or a 4-20 mA 2-wire input. A transducer is also needed when connecting pH or ORP via 4-20 mA (part no. 809126 for pH and part no. 809127 for ORP) One input for temperature measurement (Pt 100) for temperature compensation is provided for the measured variable pH and conductivity (direct).

Two analogue outputs (0/4…20 mA) and two potential-free extra low voltage relays with a changeover contact are available; the analogue outputs are electrically isolated. Either the main value (pH or ORP voltage) or temperature can be assigned to the relay contact.

DULCOPAC transmitters/controllers are operated and configured by push buttons and an integral LCD display.

DUCOPAC transmitters/controller are generally housed in control cabinets. They can be used in applications where measured values do not need to be continuously read and where constant operation is not necessary. They convert measured values into a standardised and calibrated active 0/4…20 mA measuring signal that can then be transmitted to a PLC for instance (in which case a passive input must be used on the PLC).

A DULCOPAC power supply unit provides voltage for up to 10 DULCOPAC transmitters/controllers and also provides electrical isolation from the 230 V mains, also guaranteeing correct voltage supply to amperometric sensors (e.g. chlorine sensors).

Technical Data

Measurement range	pH: 2.00 ... 14 ORP: -1,500 ... +1,500 mV Chlorine, bromine: 2 ppm to 100 ppm in 6 ranges Conductivity: 2 electrodes 0-10 mS/cm, k=0.1 to 10 Hydrogen peroxide: 0-200 to 50,000 ppm Peracetic acid: 0-50 to 5,000 ppm Temperature
Correction variable	Temperature for pH and conductivity via Pt 100
Correction range	0 ... 100 °C
Control characteristic	P/PID control
Control	2-sided control
Signal current output	2 x 0/4-20 mA electrically isolated, range and assignment (measured or actuating variable) can be set
Control outputs	2 extra low voltage relays, 48 V with 1 A as a control output with pulse width modulation or limit value output
Electrical connection	24V DC, 3W, via DULCOPAC power supply unit
Permissible ambient temperature	-10…50 °C
Dimensions	60 x 90 x 55 mm (H x W x D)
Enclosure rating	IP 20
Weight	0.3 kg

	Order no.
DULCOPAC pH (mV)	1036425
DULCOPAC pH (mA)	1036426
DULCOPAC ORP/redox (mV)	1036427
DULCOPAC ORP/redox (mA)	1036428
DULCOPAC Chlorine	1036429
DULCOPAC Conductivity (mA)	1036430
DULCOPAC Conductivity (direct)	1036431
DULCOPAC PAA (peracetic acid)	1036432
DULCOPAC PEROX	1036433
DULCOPAC Bromine	1036434
DULCOPAC Power supply unit, 230V AC	1036436

8.10.4 Application examples for DULCOPAC

This chapter describes typical combinations of components for measuring stations with DULCOPAC transducers.

Measurement of pH with connection to a PLC

Tasks and applications

The pH value is to be measured in the bypass of a process water pipe, temperature 35 °C, pressure 3 bar, no solid matter content The transducer is located in a control cabinet and the converted measuring signal is transmitted to a PLC as an analogue signal.

Components of the measuring/control station

Number	Name	Order no.	Chapter
1	DULCOPAC pH (mV)	1036425	8.10.1
1	DULCOPAC Power supply unit, 230V AC	1036436	8.10.1
2 m	Coaxial cable Ø 5 mm, 10.0 m - S	305040	7.5.1
1	pH sensor PHEP 112 SE	150041	7.2.2
1	Bypass fitting DGMA with sample water limit contact	DGMa310T000	7.5.3

Measurement of free chlorine with connection to a PLC

Tasks and applications

The concentration of chlorine is to be measured in the bypass of a process water pipe. Chlorine concentration approx. 0.6 ppm, water temperature approx. 35 °C, total pressure approx. 1 bar, no solid matter The transducer is located in a control cabinet and the converted measuring signal is transmitted to a PLC as an analogue signal.

Components of the measuring/control station

Number	Name	Order no.	Chapter
1	DULCOPAC Chlorine	1036429	8.10.1
1	DULCOPAC Power supply unit, 230V AC	1036436	8.10.1
2 m	Signal lead, sold by the meter 2 x 0.25 mm^2 Ø 4 mm	725122	7.3.2
1	Chlorine sensor CLE 3-mA-2 ppm	792920	7.3.2
1	Bypass fitting Bypass fitting DGMA with sample water limit contact	DGMa 301T000	7.5.3

Measurement of conductive conductivity with connection to a PLC

Tasks and applications

The electrolytic conductivity is to be measured in the bypass of a process water pipe. Conductivity approx. 7500 µS/cm, water temperature approx. 35 °C, total pressure approx. 1 bar, no solid matter The transducer is located in a control cabinet and the converted measuring signal is transmitted to a PLC as an analogue signal.

Components of the measuring/control station

Number	Name	Order no.	Chapter
1	DULCOPAC Conductivity (direct)	1036431	8.10.1
1	DULCOPAC Power supply unit, 230V AC	1036436	8.10.1
1	Signal lead type LKT for conductivity sensor Ø 6,2 mm	723712	7.5.1
1	Conductivity LFT 1 DE	1001376	7.4.2
1	Bypass fitting DGMA with sample water limit contact	DGMa310T000	7.5.3

8.11 Measuring And Test Systems

8.11.1 Portamess Portable Meters, Measured Variable pH

- Smooth membrane keypad
- Large easy-to-read LC display
- Integrated sensor quivers for protection of electrode
- Robust housing (enclosure rate IP 66)
- Robust, watertight gold plated connector sockets

Applications

- industrial
- environmental protection
- food production
- in water and waste water investigation.



pk_5_099

Technical Data

Measurement range	pH: -2.00 … +16.00 mV: -1300 … +1300
Measurement error	pH: < 0.01 mV: < 0.1 % of measured value ±0.3 mV
Sensor adjustment	8 buffer sets
Temperature compensation	manual
Enclosure rating	IP 66
Operating life	2000 hours with 3 AA batteries
Dimensions H x W x D	160 x 133 x 30
Weight	560 g with batteries
Included in delivery	Measuring device, carrying case, operating instructions manual in German, English and French

	Order no.
Portamess® 911 pH	1008710

Note:
The scope of delivery does not include any pH sensor.

Accessories

	Capacity ml	Order no.
PHEKT-014F	–	1036537
Coaxial cable Ø 5 mm, 0.8 m - SD*	–	305098
Buffer pH 7.0	50	506253
Buffer pH 4.0	50	506251

* fitting for all ProMinent® pH sensors with SN6 connection

Electrode tubular see Chapter 8.10.2

8.11.2 Portamess Portable Meters Measured Variable, Conductivity

- Connection of the 4-electrode sensor LF 204 (see Chapter 5.4.3 Accessories for Portamess® units)
- 4-electrode sensor LF204 included in delivery scope
- robust key pad
- large, well-legible LC display
- integrated electrode tubular to protect the electrode
- robust housing (IP rating IP 66)
- robust, watertight, gold-plated connecting sockets

Applications:

- in the industry
- in environmental protection
- in the food industry
- in the water or waste water analysis.



pk_5_098

Technical Data

Measurement range	Unit 0.01 µS/cm … 1,000 mS/cm, with sensor LF204: 1 µS/cm … 500 mS/cm
Temperature	-20 … 120 °C
Salinity	0.0 … 45.0 g/kg (0 … 30 °C)
TDS	0 … 1999 mg/l (10 … 40 °C)
Measurement error	Conductivity < 0.5 % of measured value (at conductivity levels > 500 mS/cm < 1 % of measured value) ±1 digit Temperature < 0.3 K ±1 digit
Sensor adjustment	Direct input of cell constants, automatic detection of cell constants with KCl solution 0.01 or 0.1 mol/l, cell adjustment with any known solution
Cell constant	0.010 … 199.9 cm^{-1} (adjustable)
Temperature compensation	configurable
Enclosure rating	IP 66
Operating life	Approx. 1000 hours with 3 AA batteries
Dimensions H x W x D	160 x 133 x 30
Weight	560 g with batteries
Included in delivery	Measuring unit, field case, conductivity sensor LF 204, operating instructions in the German, English, and French language

	Order no.
Portamess® 911 Cond	1008713

Accessories:

Conductivity sensor and electrode tubular see Chapter 8.10.2

Note:

The scope of delivery does include the conductivity sensor LF 204.

8.11 Measuring And Test Systems

8.11.3 Photometer

Photometer DT1, DT2, DT3 and DT4

- Portable compact Photometer
- Simple to operate with support text
- Reliable, simple measurement of chlorine, chlorine dioxide, fluoride, chlorite, H_2O_2, bromine, ozone, pH and and trichloroisocyanuric acid
- Self-diagnostic

Applications:

- swimming pool
- drinking water
- process water



pk_5_021
Photometer

Technical Data

Measurement range	**DT1:** 0.05 … 6.0 mg/l free chlorine (DPD1) + total chlorine (DPD1+3) 0.1 … 13.0 mg/l bromine (DPD1) 0.05 … 11 mg/l chlorine dioxide (DPD1) 0.03 … 4.0 mg/l ozone (DPD4) 6.5 … 8.4 pH (phenol red) 1 … 80 mg/l cyanuric acid **DT2B:** 0.05 … 2.0 mg/l fluoride 0.05 … 6.0 mg/l free chlorine and total chlorine 0.05 … 11.0 mg/l chlorine dioxide **DT3:** 1 … 50 / 40 … 500 mg/l hydrogen peroxide **DT4:** 0.03 … 2.5 mg/l chlorite, 0.05 … 11 mg/l chlorine dioxide, 0.05 … 6 mg/l chlorine
Measuring tolerance	Dependant upon measured value and measuring method
Battery	9 V battery (approx. 600 x 4-minute measurement cycles)
Permissible ambient temperature	5…40 °C
Relative humidity	30 … 90 % (non-condensing)
Material	Housing material: ABS Keypad: Polycarbonate
Dimensions L x W x H (mm)	190 x 110 x 55
Weight	0.4 kg

	Order no.
Photometer DT1	1003473
Photometer DT2B	1010394
Photometer DT3	1023143
Photometer DT4	1022736

Photometers supplied with accessories, container vessels and reagents.

8.11 Measuring And Test Systems

Consumable items

	Order no.
DPD 1 buffer, 15 ml	1002857
DPD 1 reagent, 15 ml	1002858
DPD 3 solution, 15 ml	1002859
Phenol red tablets R 175 (100 in each)	305532
Cyanuric acid tablets R 263 (100 in each)	305531
SPADNS reagent, 250 ml for fluoride detection	1010381
Calibration standard fluoride 1 mg/l for calibration of photometer (fluoride detection)	1010382
3 off spare cells: round cells with covers for DPD phenol red and cyanuric acid detection (DT1 and DT2B)	1007566
3 off spare cells for fluoride detection (DT2A and B)	1010396
DPD reagents set, 15 ml each: 3 x DPD 1 buffer, 1 x DPD 1 reagent, 2 x DPD 3 solution	1007567
Chlorine dioxide tablets Nr. 1 R 127	501317
Chlorine dioxide tablets Nr. 2 R 128	501318

Spare parts

Chlorite Photometer

	Order no.
Foamer for expulsion of chlorine dioxide (DT4)	1022754
3 off spare cells: round cells with covers for DPD phenol red and cyanuric acid detection (DT1 and DT2B)	1007566

H_2O_2 measurement

	Order no.
Reagent for H_2O_2 (DT3), 15 ml	1023636
Spare cell, 5x , for H_2O_2 (DT3)	1024072

8.11 Measuring And Test Systems

8.11.4 DULCOMETER® Simulator (pH/mV/mA/Pt 100/Pt 1000)

- Simulation of pH and mV signals
- Simulation of Pt 100/Pt 1000 (25 °C and 80 °C)
- Simulation and measurement of mA signals

Applications:

Inspection of DULCOMETER® units, service, labour

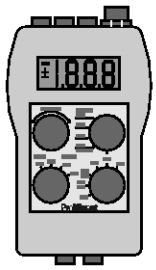

pk_5_108

Technical Data

Measuring range U_+	5 ... 30 V DC (measurement of supply voltage for external passive 4 ... 20 mA transducers)
Simulation	pH 2,00 ... 12,00 ±2000 mV 0...20 mA Pt 100, Pt 1000 (25 °C, 80 °C)
Simulation output	SN6, banana jack
Battery	9 V block battery
Operating life	approx. 150 h
Weight	approx. 265 g (with battery)
Enclosure rating	IP 20
Permissible ambient temperature	0…40 °C
Zubehör	Measuring cable set

	Order no.
DULCOMETER® Simulator	1004042

8.12.1 Measurement Transducer 4...20 mA (Two Wire)

Advantages:

- Safer signal transfer, even across large distances
- Interference free 4-20 mA signal
- Simple installation directly onto sensor

Typical applications:

Measurement signal transfer over large distances, or to transfer signals subject to disturbance (e.g. pH, redox) in conjunction with D1C, D2C and DULCOMARIN® measurement and control systems, or for direct connection to PC/PLC.

pH measuring transducer 4 ... 20 mA type pH V1

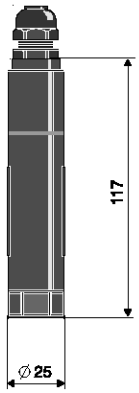

pk_5_064

Measurement range	pH 0 … 14
Measurement error	better than 0.1 pH (typical ±0.07 pH)
Socket	SN6
Input resistance	> 5 x 10^{11} Ω
Signal current output	4 … 20 mA ≈ -500 … +500 mV ≈ pH 15.45 … -1.45 not calibrated, not electrically isolated
Power supply DC	18…24 V DC
Ambient temperature	-5…50 °C, non-condensing
Enclosure rating	IP 65
Dimensions	141 mm (length), 25 mm (∅)

	Order no.
pH measurement transducer 4 ... 20 mA type pH V1	809126

ORP measuring transducer 4 ... 20 mA type RH V1

Measurement range	0 … 1000 mV
Measurement error	better than ±5 mV (typical ±3 mV)
Socket	SN6
Input resistance	> 5 x 10^{11} Ω
Signal current output	4 … 20 mA ≈ 0 … +1000 mV not electrically isolated
Power supply DC	18…24 V DC
Ambient temperature	-5…50 °C, non-condensing
Enclosure rating	IP 65
Dimensions	141 mm (length), 25 mm (∅)

	Order no.
ORP measurement transducer 4 ... 20 mA type RH V1	809127

Temperature measuring transducer 4 ... 20 mA type Pt100 V1

Measurement range	0 … 100 °C
Measurement error	better than ±0,5 °C (typical ±0,3 °C)
Socket	SN6
Input resistance	~ 0 Ω
Signal current output	4 … 20 mA ≈ 0 … +100 °C not electrically isolated
Power supply DC	18…24 V DC
Ambient temperature	-5…50 °C, non-condensing
Enclosure rating	IP 65
Dimensions	141 mm (length), 25 mm (∅)

	Order no.
Temperature measurement transducer 4 ... 20 mA type Pt 100 V1	809128

8.12 Accessories For Measurement And Control Devices

PEROX transducer

The microprocessor-based PEROX transducer is used to control and activate the PEROX sensor and to evaluate the sensor signal. It is screwed directly on to the sensor head. The transducer can be directly connected to the D1C controller via a 3-core signal cable.

The PEROX transducer is approx. 205 mm long with a diameter of 32 mm.

PEROX transducer for H_2O_2 measurement

contains an internal selector switch for the three ranges:

1 … 20, 10 … 200 and 100 … 2000 mg/l H_2O_2

	Order no.
Perox transducer V1	741129

Accessory:

	Order no.
Test lead, 3-core (3 x 0.25 mm², 5 mm diam.)	791948

8.12.2 Accessories For Portamess® Portable Meters

Electrode case

Set of 5, for water-tight storage of sensors. For Portamess® pH and Cond

	Order no.
Electrode case	1008716

Conductivity sensor



pk_5_093

	Conductivity sensor LF 204
Number of electrodes	4
Sensor shaft	Black Epoxy
Electrode material	Graphite
Shaft length	120 mm
Shaft diameter	15.3 mm
Cable length	1.5 m
Temperature sensor	)NTC (30 kΩ) -5 … 100 °C
Immersion depth min.	36 mm
Max. pressure	2 bar
Temperature	0 … 90 °C
Cell constant	0.475 cm^{-1} ±1.5 %
Measurement range	1 µS/cm…500 mS/cm

	Order no.
Conductivity sensor LF 204	1008723

8.13 Application Examples

8.13.1 Introduction

This chapter describes typical combinations of components for measuring stations in applications in the areas of drinking water, cooling water, waste water and swimming pool water. Pre-installed measuring systems are also available for these applications (refer to Chapter 6 Panel-Mounted Measuring/Control Stations and Chapter 4.5 Swimming Pool Dosing Systems DULCODOS® Pool).

8.13.2 Measuring And Control Systems Consist Of

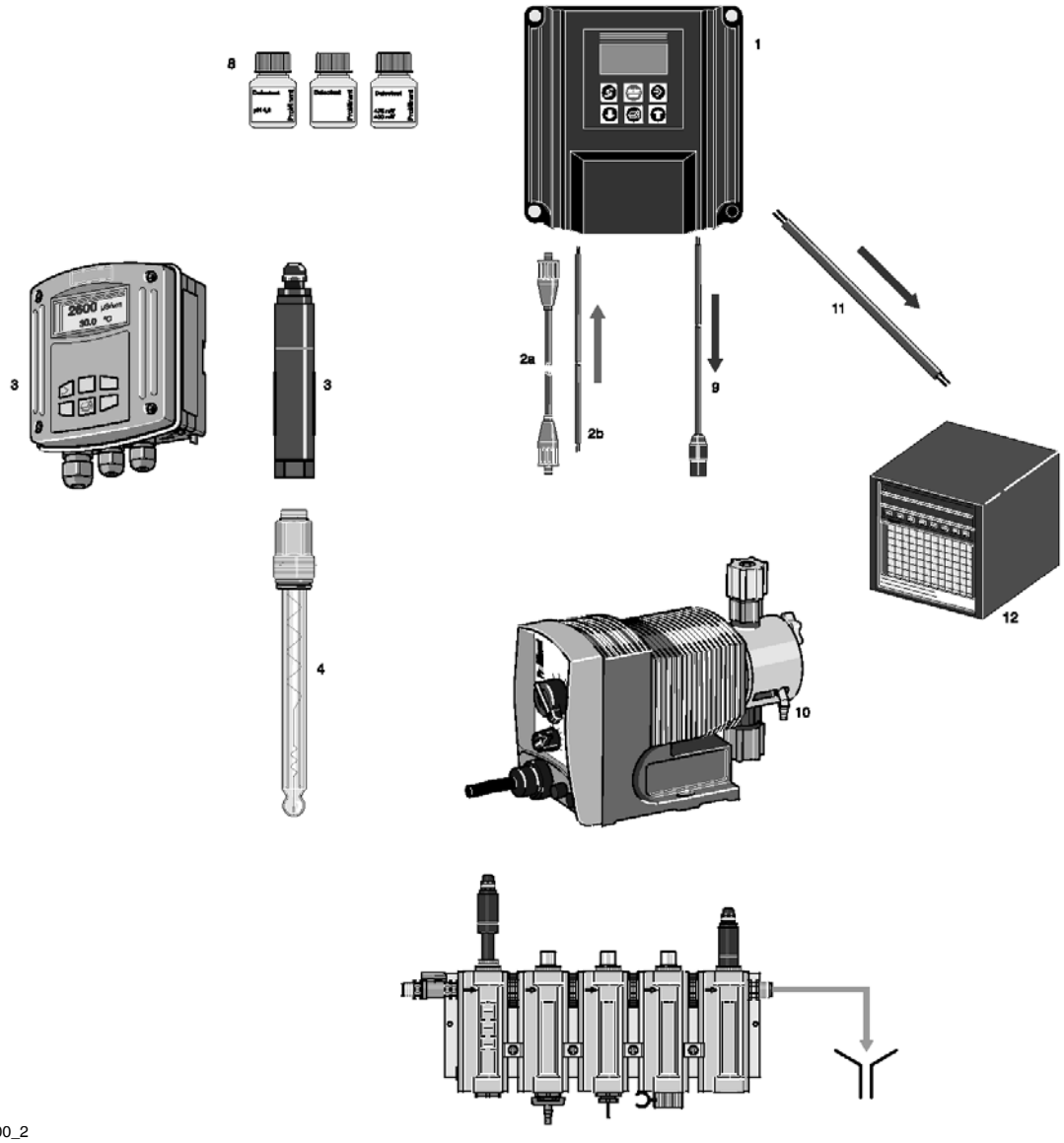

pk_5_000_2

1 Measuring and control device e.g. D1CA
2a Signal lead e.g. coaxial cable for pH, Redox, Pt 100 sensors
2b 2-core cable for Cl_2, ClO_2, O_3 sensors and transmitters
3 4-20 mA transmitter (for 2-wire technology), DMTa or pH V1
4 Sensor, e.g. pH combination sensor
5 Probe fitting, e.g. in-line type DGMA
Assembly kit (791818) for Cl_2, ClO_2, O_3 sensors (not shown)
6 Sample water pipe stop cock
7 Sampling tap
8 Buffer solutions (pH/redox)
9 Control cable (for control of dosing pump)
10 actuating device e.g. ProMinent® Beta® metering pump
11 2-core cable
12 Recorder e.g. line recorder

8.13 Application Examples

8.13.3 Disinfection Of Drinking Water

Measurement of free chlorine with connection to a PLC

Tasks and applications

In the treatment of drinking water in a water works with a PLC as the higher-order control system, simple measuring stations are needed to measure the disinfectant "free chlorine" at the outlet of the water works and thereafter to monitor protection of the network in the distribution system. Metering is proportional to the flow and is controlled by the PLC. The following conditions must be met:

- Disinfectant: free chlorine with an adjustable concentration of 0.1 ppm
- Raw water: groundwater with a pH of 7.5 and a temperature of 8 °C-13 °C
- Installation of the measuring station in the bypass of the process flow
- Display of the measurement result and calibration by a measuring instrument in the proximity of the bypass installation and transmission of the measured value to the PLC via an electrically isolated 4-20 mA signal
- Voltage supply to the measuring instrument by the PLC (2-wire instrument)

Components of the measuring/control station

Number	Name	Order no.	Chapter
1	Transmitter DMTa	DMTa W090C00E0000	8.8.1
1	Sensor for free chlorine CLE 3-DMT-5 ppm	1005511	7.3.2
1	5 core universal cable, 5 pin round plug	1001300	7.5.1
1	Bypass fitting DGMA	DGMa 101T000	7.5.3

Benefits

- Simple, compact and cost-effective measuring station in the vicinity of the bypass installation
- Electrical installation cost-savings due to voltage supply by a 2-wire system
- No need for electrical isolation of the output signal by electrical isolation integral to the DMT

Measurement and control of ozone in water works for pre-oxidation of the raw water

Tasks and applications

A measuring and control station is needed at the pre-oxidation stage for "ozone", the oxidising agent and disinfectant used, in the treatment of drinking water in a water works at the entrance to a water works. With a constant flow, the fluctuating attrition of the ozone, caused by the changing quality of the raw water, is to be compensated on the basis of the measured variables. The following conditions must be met:

- Oxidising agent / disinfectant: Ozone with an adjustable concentration of 0.2 ppm
- Raw water: surface water with a pH of 7.3-7.6 and a temperature of 5 °C-17 °C
- Installation of the measuring station in the bypass of the process flow
- Alarm to signal infringement of upper and lower limit values
- Display of measured results and calibration via a measuring instrument in the proximity of the bypass installation and transmission of the measured value to the control desk via an electrically isolated 4-20 mA signal
- Alarm to signal ingress of sample water flow

Components of the measuring/control station

Number	Name	Order no.	Chapter
1	Controller D1Cb	D1Cb W00601010VZ1011M22EN	8.2.1
1	Sensor for ozone OZE 3-mA-2 ppm	792957	7.3.6
2 m	Signal lead, sold by the meter 2 x 0.25 mm^2 Ø 4 mm	725122	7.3.2
1	Bypass fitting Bypass fitting DGMA with sample water limit contact	DGMa 301T000	7.5.3

Benefits

- Precise, self-regulating process management with changing raw water quality by the completely automated measuring and control station with variable-dependent control of ozone concentration
- Reliable, safe operation thanks to alarm signalling in the event of infringement of limit values and ingress of sample water flow
- The control is monitored by transmission of the measured value as an electrically isolated 4-20 mA output signal by the control to the control panel

8.13 Application Examples

Measurement and control of free chlorine with feed-forward control

Tasks and applications

A measuring and control station is needed for the "free chlorine" disinfectant in the treatment of drinking water in a water works. Metering is largely proportional to the flow, although control can also be proportionately variable-dependent to compensate for peaks of chlorine attrition, for instance in the event of rainfall. The following conditions must be met:

- Disinfectant: free chlorine with an adjustable concentration of 0.2 ppm
- Raw water: source water with a pH of 7.0-7.5 and a temperature of 1 ?-13 ?
- Installation of the measuring station in the bypass of the process flow
- Display of measured results and calibration via a measuring instrument in the proximity of the bypass installation and transmission of the measured value and actuating variable to the control panel via an electrically isolated 4-20 mA signal
- Alarm to signal ingress of sample water flow
- Alarm signalling the infringement of the preset upper and lower limit values

Components of the measuring/control station

Number	Name	Order no.	Chapter
1	Controller D1Ca with feed-forward control	D1Ca W0C11214M220E	8.3.4
1	Sensor for free chlorine CLE 3-mA-0.5 ppm	792927	7.3.2
2 m	Signal lead, sold by the meter 2 x 0.25 mm^2 Ø 4 mm	725122	7.3.2
1	Bypass fitting Bypass fitting DGMA with sample water limit contact	DGMa 301T000	7.5.3

Benefits

- Precise, self-regulating disinfection by a fully automated measuring and control station
- Flow-proportional control can be safeguarded by proportionate variable-dependent control to combat peaks of attrition
- Reliable, safe operation thanks to alarm signalling in the event of infringement of limit values and ingress of sample water flow
- The control is monitored by transmission of the measured value and actuating variable as two electrically isolated 4-20 mA output signals to the controls panel

Measurement and control of free chlorine in water works with high pH values

Tasks and applications

A measuring and control station is needed at the end of the treatment cycle for "free chlorine" disinfectant in the treatment of drinking water in a water works. Metering is largely proportional to the flow, although control can also be proportionately variable-dependent to compensate for peaks of chlorine attrition, for instance in the event of rainfall. Unusually there is a fluctuating and high pH value of 7.8 to 9.2 that does not permit the direct measurement of free chlorine. The pH value is to be measured at the same time. Further conditions must be met:

- Disinfectant: free chlorine with an adjustable concentration of 0.4 ppm
- Raw water: source water with a pH of 7.8 to 9.2 and a temperature of 1 °C to 13 °C.
- Installation of the measuring station in the bypass of the process flow
- Alarm signalling the infringement of preset upper and lower limit values and ingress of sample water flow
- Display of the measured result and calibration via a measuring instrument in the proximity of the bypass installation and transmission of the measured value and actuating variable to the control panel each via an electrically isolated 4-20 mA signal

Components of the measuring/control station

Number	Name	Order no.	Chapter
1	DULCOTROL: free chlorine measurement - pH-independent	FCCA CP010A000C	6.4.2

Benefits

- Reliable measurement of free chlorine even with high and fluctuating pH values
- Precise, self-regulating disinfection by the fully automated measuring and control station, even in the event of peaks of attrition by combined flow- and variable-dependent control
- The control is monitored by transmission of the measured value and actuating variable to the control panel as two electrically isolated 4-20 mA output signals

8.13 Application Examples

Measurement of key chemical water parameters at various points in the treatment of drinking water

Tasks and applications

Measuring and control stations are needed at the following points in the treatment cycle and in the control room in the treatment of drinking water in a water works;

- Assessment of the raw water at the inlet of the water works: pH, electrolytic conductivity, turbidity
- Intermediate oxidation/disinfection of the raw water with chlorine dioxide by combined flow- and variable-dependent control
- Control of the pH value on the basis of variable-dependent metering of lime milk
- Disinfection of the treated water to protect the distribution system network by the flow-proportional metering of chlorine dioxide
- Measuring stations for the final inspection of the treated water: pH, electrolytic conductivity, turbidity, chlorine dioxide and chlorite and redox

A Raw water inlet control
B Intermediate oxidation/disinfection with chlorine dioxide
C pH adjustment

1 A module
2 I module
3 M module
4 N module
5 Disinfection controller
6 DMT transmitter
7 Chlorine dioxide generator
8 Turbidity
9 Flow gauge

T1 Isolating amplifier with signal outputs for pH, conductivity and temperature
T2 Isolating amplifier with signal outputs for chlorine dioxide, chlorite and flow in the process line
T3 Isolating amplifier with signal outputs for pH measurement and pH actuating variable

X1 DGMA with flow monitor, pH sensor and conductivity sensor
X2 DGMA with flow monitor, chlorine dioxide sensor and chlorite sensor
X3 DGMA with flow monitor and pH sensor

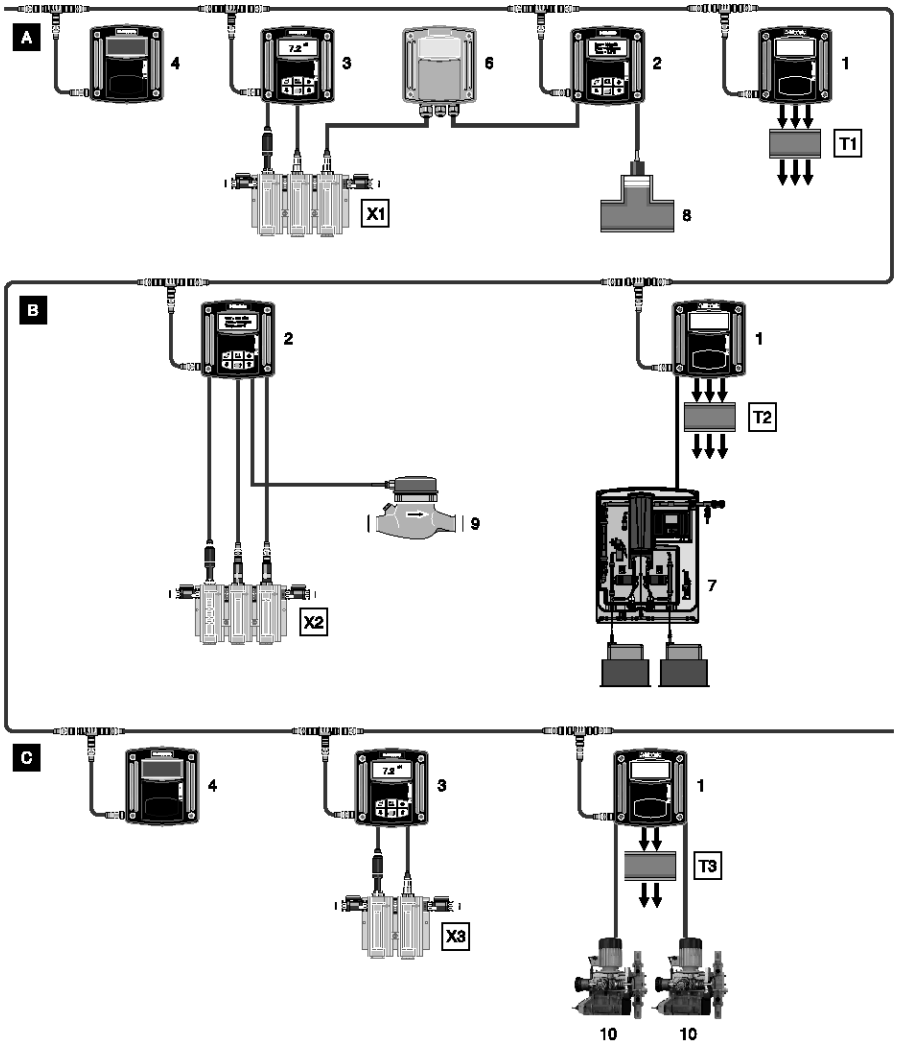

AP_PTW_0002_1_SW3

8.13 Application Examples

D ClO_2disinfection
E Final inspection

1 A module
2 I module
3 M module
4 N module
5 Disinfection controller
6 DMT transmitter
7 Chlorine dioxide generator
8 Turbidity
9 Flow gauge

T4 Isolating amplifier with signal outputs for chlorine dioxide measurement, actuating variable, chlorite and flow
T5 Isolating amplifier with signal outputs for pH, redox, chlorine dioxide and chlorite
T6 Isolating amplifier with signal outputs for turbidity and conductivity

X4 DGMA with flow monitor, chlorine dioxide sensor and chlorite sensor
X5 DGMA with flow monitor, pH, redox, chlorine dioxide, chlorite and conductivity sensors

11 Control panel (OPC server)

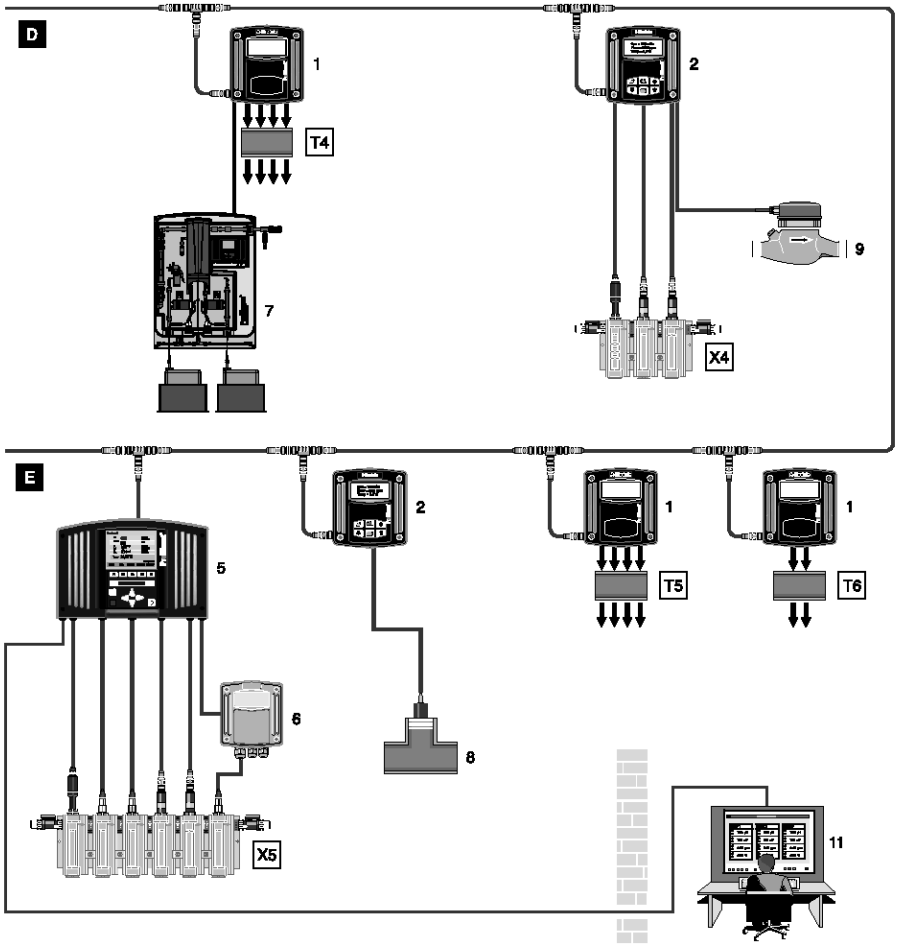

AP_PTW_0002_2_SW3

The following conditions must be met:

- Disinfectant: free chlorine with an adjustable concentration of 0.2 ppm
- Raw water: surface water with a pH of 7.0-7.5 and a temperature of 5 °C-17 °C
- Installation of the measuring stations in the bypass of the process flow
- Distributed system at a distance of 300 m with bidirectional communication between
  - **a** the central unit located in the plant monitoring room at the outlet of the water works and used to display, register and transmit all measured values and actuating variables to the control panel via the OPC server. Optionally all measured values can be transmitted via 4-20 mA signals to the control panel.
  - **b** modular measuring and control units located adjacent to the relevant bypass installation to connect the sensors, display the measured value, calibrate the measuring station and transmit the measured value to the central unit and via an electrically isolated 4-20 mA signal to the control panel.
- Alarm signalling the infringement of preset upper and lower limit values and ingress of sample water flow

8.13 Application Examples

Components of the measuring/control station

Quantity	Name	Parts number/ Identcode	Chapter
Measuring and control units			
1	Multi-channel measuring and control system for the treatment of drinking water DULCOMARIN® II	DXCA WD61MINDEN01	8.5.1
2	M module	DXMA MW0DEN01	8.5.12
6	A module	DXMa AW0DEN01	8.5.12
3	I module	DXMa IW0DENE01	8.5.12
3	N module	DXMa NW200001	8.5.12
6	Isolating amplifier 4-channel for mA outputs of the A module	1033536	8.5.17
Sensoren			
3	pH sensor PHEP 112 SE	150041	7.2.2
1	ORP RHEP-Pt-SE	150094	7.2.3
3	Chlorine dioxide CDE 3-mA-0.5 ppm	1026154	7.3.4
2	Conductivity LFT 1 DE	1001376	7.4.2
2	Turbidity	External unit with 4-20 mA signal	–
2	Chlorite CLT 1-mA-0.5 ppm	1021596	7.3.5
Connecting cable			
300 m	Connecting cable – CAN (by the metre)	1022160	8.5.17
5	CAN (by the metre) – connection kit	1026589	8.5.17
5	Signal lead, sold by the meter 2 x 0.25 mm^2 Ø 4 mm	725122	7.3.2
4	Cable combination coax 2 m- SN6 - pre-assembled*	1024106	8.5.17
2	Signal lead type LKT for conductivity sensor Ø 6,2 mm	723712	7.5.1
Armatur			
1	Bypass fitting DGMA	DGMA 320T000	7.5.3
2	Bypass fitting DGMA	DGMA 302T000	7.5.3
1	Bypass fitting DGMA	DGMA 332T000	7.5.3
1	Bypass fitting DGMA	DGMA 301T000	7.5.3

Benefits

- Cost-savings due to distributed system with only one central unit
- Cost-savings and enhanced cabling safety by means of a BUS system
- Improved process safety by the permanent and reliable availability of digital measured data and operating statuses, as well as automated process management and alarm signalling by bidirectional BUS intercommunication of all measuring and control units and communication to the higher-order control system via the OPC server
- Excellent data transparency at field level by the registration, display and traceability of all relevant measured and operating data in the central unit

8.13.4 Cooling Water Treatment

A cooling circuit with measurement of conductive conductivity

Tasks and applications

A cooling circuit is to be controlled. Bleed is initiated on the basis of the conductivity measured in the circulating water. The circulating water can often be seriously polluted water, necessitating the use of cost-effective, conductive conductivity measuring. The time- and demand-controlled metering of biocides and corrosion inhibitors must be automated.

Components of the measuring/control station

Number	Name	Order no.	Chapter
1	ProMcon cooling tower controller 230 V without modem	1034730	8.7.2
–	ProMcon cooling tower controller 115 V without modem	1034731	8.7.2
1	Conductive conductivity sensor LMP 1	1020513	7.4
1	Signal lead type LKT for conductivity sensor Ø 6,2 mm	723712	7.5.1
1	Inline fitting DN 25 - 3/4"	1020616	7.5

Benefits

- Cost-effective, compact control for one cooling circuit
- More cost-effective handling of biocides can be achieved thanks to programmable bleed and the option of bleed lock-out following metering.
- The time-controlled metering of one or two biocides prevents the formation of biofilms and ensures that the system runs efficiently.
- The volume-proportional metering of inhibitors protects the system against corrosion
- and the consumption of chemicals can be reduced by the seasonal adjustment of the metering volume (summer / winter changeover).

A cooling circuit with measurement of inductive conductivity

Tasks and applications

Automated treatment of cooling water is required. Desalination is initiated on the basis of the conductivity measured in the circulating water. The circulating water is often seriously polluted water, necessitating the use of inductive conductivity measuring. Time- and demand-controlled metering of biocides and corrosion inhibitors must be ensured.

Components of the measuring/control station

Number	Name	Order no.	Chapter
1	D1Ca Cool Control	D1CaW0K62011G200E	8.7.4
1	Inductive conductivity sensor ICT 1	1023244	7.4.3
1	Inline fitting DN 25 - 3/4"	1020616	7.5

Benefits

- Compact system suitable for use with contaminated cooling water
- Bleed is controlled on the basis of the conductivity measured in the circulating water
- Up to two biocide pumps can be controlled independently of each other by means of a programmable day and week controller
- Additional corrosion inhibitors are metered in a volume-proportional functional mode
- More cost-effective handling of biocides can be achieved thanks to programmable desalination and the option of bleed lock-out following metering.

Multifunctional control for multiple cooling towers

Tasks and applications

The cooling circuit of two cooling towers is to be controlled. The cooling towers' process parameters are monitored and the circulating water is regulated according to the limit values. Should the set-up of the system change, the control can be adapted by simply changing the configuration or by modular upgrades. Corrosion inhibitors are to be metered according to the corrosion measured in the cooling tower.

8.13 Application Examples

Components of the measuring/control station

Number	Name	Order no.	Chapter
1	M10T	M10T-C02-T22-TF2-IC2-TC1002-CR/CN2-EU	8.7

Explanation of the identcode:

M10T	MultiFLEX Tower Controller
CO2	Two measurements of conductivity including conductivity sensors
T22	Two biocide controls with pre-desalination and locking function
TF2	Two flow measurements including sensors
IC2	Two 4-20 mA outputs to emit the conductivity value
TC1002	Inductive conductivity measurement
CR /CN2	Two corrosion measurements including sensors
EU	European Devices version

Benefits

- Cost-savings due to the use of a multichannel control for multiple cooling towers
- The high number of inputs (analog and digital) and relay outputs enables complex control systems to be realised
- Versatile adaptation of control to the respective application by the freely configurable linking of inputs to outputs
- Convenient configuration of the control thanks to the integral web server with TCP/IP Ethernet interface
- The optional visualisation and configuration software (Trackster3) enables the total system to be visualised in real-time and freely definable reports to be created detailing the history of measured data and occurrence of alarms
- Corrosion inhibitors can be economically metered on the basis of actual demand according to the corrosion rate measured online

8.13.5 Neutralisation Of Industrial Waste Water

pH control with one control direction

Tasks and applications

Turbid waste water with a relatively constant pH value that is either always too high or always too low and a constant flow is to be continuously neutralised. The required pH value can be precisely set by the addition of acid or alkali. The pH sensor is to be fitted directly into the PVC pipe.

Components of the measuring/control station

Number	Name	Order no.	Chapter
1	Compact controller for pH/ORP	1035638	8.2.1
1	pH sensor PHER 112 SE	1001586	7.2.1
1	Coaxial cable Ø 5 mm, 2.0 m - S	305030	7.5.1
1	90° T-piece DN 25	1001494	7.5.5

Note: The use of other sensors is also possible depending on the quality of the waste water (see Selection Guide DULCOTEST® pH Sensors → 7-2)

with seriously contaminated waste water with solid matter content

Number	Name	Order no.	Chapter
1	pH sensor PHEX 112 SE	305096	7.2.1

with clear waste water

Number	Name	Order no.	Chapter
1	pH sensor PHEP 112 SE	150041	7.2.2

Benefits

- Ultra-compact control design
- Automatically precise pH value and economical metering of chemicals
- Simple, language-independent operator guidance of control
- Precisely coordinated components

pH control with two control directions

Tasks and applications

Turbid waste water with a slightly fluctuating pH value and relatively constant flow is to be continuously neutralised. The pH sensor is to be fitted directly into the PVC pipe. If the temperature of the waste water fluctuates, the pH measurement should be temperature-compensated. The control should be interrupted if no waste water is flowing.

Components of the measuring/control station

Number	Name	Order no.	Chapter
1	Single-channel control D1Cb	D1CbW00601000 VP5211G22EN	8.2.2
1	pH sensor PHER 112 SE	1001586	7.2.1
1	Coaxial cable Ø 5 mm, 2.0 m - S	305030	7.5.1
1	Temperature sensor Temperature sensor, Pt 100	305063	7.2.6
1	SN6 - open ended (Cable PT 100 with D1C, 5 m)	1003208	7.5.1
1	90° T-piece DN 25	1001494	7.5.5

with seriously contaminated waste water with solid matter content

Number	Name	Order no.	Chapter
1	pH sensor PHEX 112 SE	305096	7.2.1

with clear waste water

Number	Name	Order no.	Chapter
1	pH sensor PHEP 112 SE	150041	7.2.2

8.13 Application Examples

Benefits

- Reliable and precise pH control of exacting continuous neutralisation by the simultaneous metering of alkali and acid and PID control characteristics
- Reduction in the consumption of chemicals
- Operating menu in national language
- Precisely coordinated components

pH control with two control directions and control measurement

Tasks and applications

Turbid waste water with a significantly fluctuating pH value and intermittent occurrence is to be neutralised in batch mode. The waste water is pumped into an intermediate tank and in the process is neutralised using acid and alkali. The pH value should be measured and regulated in an agitated batch container. A pH sensor should be fitted at a typical position on the tank using an immersion fitting. Once it has been neutralised the water is pumped onwards and the pH value should be controlled again in this pipe.

Components of the measuring/control station

Quantity	Name	Order no.	Chapter
1	Two-channel controller D2Ca for pH/pH	D2CaW0PP5004G20E	8.4.2
2	pH sensor PHER 112 SE	1001586	7.2.1
1	Coaxial cable Ø 5 mm, 2.0 m - S	305030	7.5.1
1	pH measurement transducer 4 ... 20 mA type pH V1	809126	8.10.1
2 m	Signal lead, sold by the meter 2 x 0.25 mm^2 Ø 4 mm	725122	7.3.2
1	Immersion fitting IPHa 1-PP	1008601	7.5.4
1	90° T-piece DN 25	1001494	7.5.5

with seriously contaminated waste water with solid matter content

Quantity	Name	Order no.	Chapter
2	pH sensor PHEX 112 SE	305096	7.2.1

with clear waste water

Quantity	Name	Order no.	Chapter
2	pH sensor PHEP 112 SE	150041	7.2.2

Benefits

- Excellent process safety thanks to simultaneous control and independent control measurement
- Reliable and precise pH control of neutralisation by the simultaneous metering of alkali and acid and PID control characteristics
- Operating menu in national language
- Precisely coordinated components

8.13.6 Treatment of swimming pool water

Private swimming pools with measurement of pH and redox

Tasks and applications

The pool water of a private outdoor swimming pool, used for only a short time every year, is to be treated. Sulphuric acid is used to correct the pH and sodium hypochlorite is used as a disinfectant. The disinfectant is to be regulated on the basis of the redox value (there should be regular comparison using a DPD 1 measuring unit).

Components of the measuring/control station

Number	Name	Order no.	Chapter
1	2-Channel control for pH and ORP DSRa	DSRAW20PR5020N010E1	8.5.1
2	Cable combination coax 2.0 m - S	1005672	7.5.1
1	pH sensor PHEP 112 SE	150041	7.2.2
1	ORP sensor RHES-Pt-SE	150703	7.2.3
1	Bypass fitting DGMa with sample water scale	DGMa120T000	7.5.3

Benefits

- Simple operation, controller with plain text operator guidance in 6 languages
- Automatically correct pH value and correct concentration of disinfectant
- All products are pre-selected to coordinate with each other

Private swimming pool with measurement of free chlorine and pH value

Tasks and applications

The pool water of a frequently-used private indoor swimming pool is to be treated. Sulphuric acid is used to correct the pH and sodium hypochlorite is used as a disinfectant. The disinfectant is to be regulated on the basis of the concentration of chlorine (calibration should be performed at regular intervals with a DPD 1 measuring unit).

Components of the measuring/control station

Number	Name	Order no.	Chapter
1	2-channel control D2Ca for pH and chlorine concentration	D2CAW0PR2000G10D	8.6.1
2 m	Signal lead, sold by the meter 2 x 0.25 mm^2 Ø 4 mm	725122	7.3.2
1	Chlorine sensor CLE 3-mA-2 ppm	792920	7.3.2
1	pH sensor PHEP 112 SE	150041	7.2.2
1	pH measurement transducer 4 ... 20 mA type pH V1	809126	8.10.1
1	Bypass fitting DGMa with sample water limit contact	DGMa311T000	7.5.3

Benefits

- Simple operation, controller with plain text operator guidance
- Automatically correct pH value and direct measurement and control of chlorine concentration
- All products are pre-selected to coordinate with each other

8.13 Application Examples

A public swimming pool with measurement of free and combined chlorine

Tasks and applications

The pool water of a frequently-used indoor swimming pool in a hotel is to be treated. Sulphuric acid is used to correct the pH and sodium hypochlorite is used as a disinfectant. The disinfectant is to be regulated on the basis of the concentration of chlorine. The filters and pool are older, therefore, for safety, the percentage of bound chlorine should be continuously measured (regular calibration with a DPD 1+4 measuring unit is necessary). All measured values should be documented with a writer.

A Technikraum

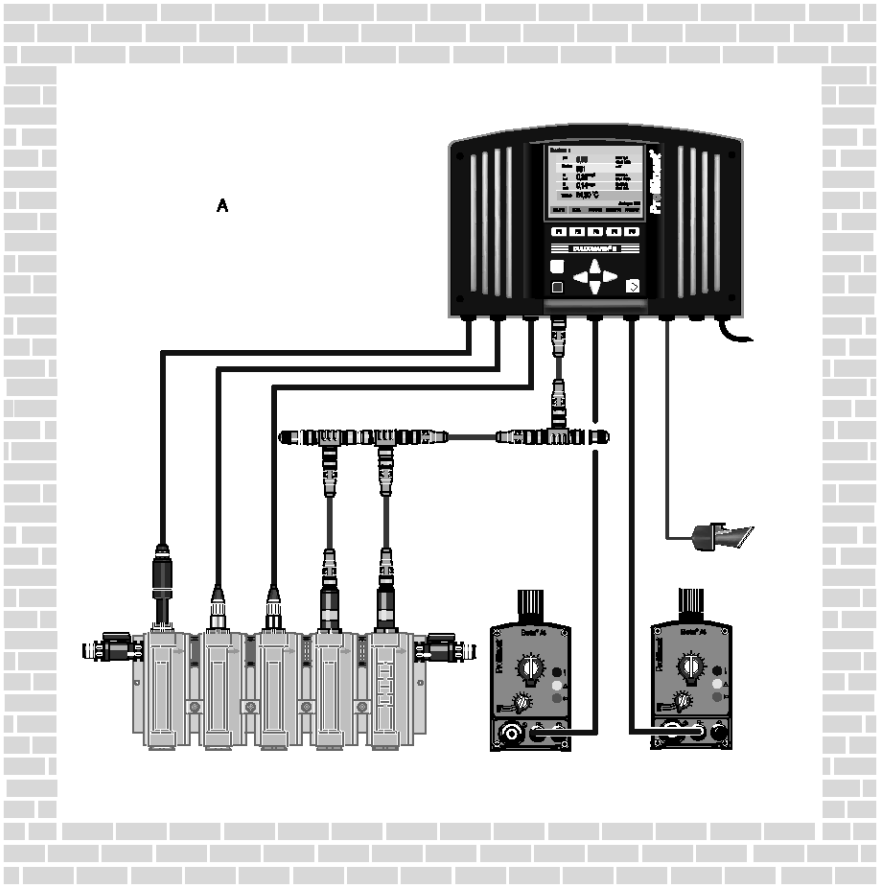

pk_5_020_1_SW3

Components of the measuring/control station

Number	Name	Parts number/Identcode	Chapter
1	DULCOMARIN® II central unit with measuring and control modules and integral screen writer	DXCaW001MAPSEN01	8.5.2
1	Chlorine sensor CLE 3.1-CAN-10 ppm	1023426	8.5.17
1	Chlorine sensor CTE 1-CAN-10 ppm	1023427	8.5.17
2	Cable combination coax 2 m- SN6 - pre-assembled*	1024106	8.5.17
1	pH sensor PHEP 112 SE	150041	7.2.2
1	ORP sensor RHES-Pt-SE	150703	7.2.3
2 m	Signal lead, sold by the meter 2 x 0.25 mm^2 Ø 4 mm	725122	7.3.2
1	Bypass fitting DGMa with sample water limit contact	DGMa322T000	7.5.3

All cables, T-pieces and termination resistors needed to connect the sensors are supplied.

Benefits

- The integral data logger and screen writer document the hygiene parameters required by law
- Continuous measurement of the bound chlorine provides information about the water quality
- The measuring and control system can be subsequently extended, for instance if a whirlpool is planned

Public swimming pool with several pools

Tasks and applications

The pool water of 5 filtration circuits in a frequently-used adventure pool is to be treated. Sulphuric acid is used to correct the pH and sodium hypochlorite is used as a disinfectant. The disinfectant is to be regulated on the basis of the concentration of chlorine. Owing to the fact that the pool is heavily used, for safety's sake the percentage of bound chlorine should be continuously measured (regular calibration with a DPD 1+4 measuring unit is necessary). All measured values should be documented with a writer and the measured values should be transmitted via OPC to process visualisation on the control panel. Metering pumps with a CAN bus connector are used. The filtration circuits each lie 50 m apart from each other.

A Whirlpool 1
B Whirlpool 2

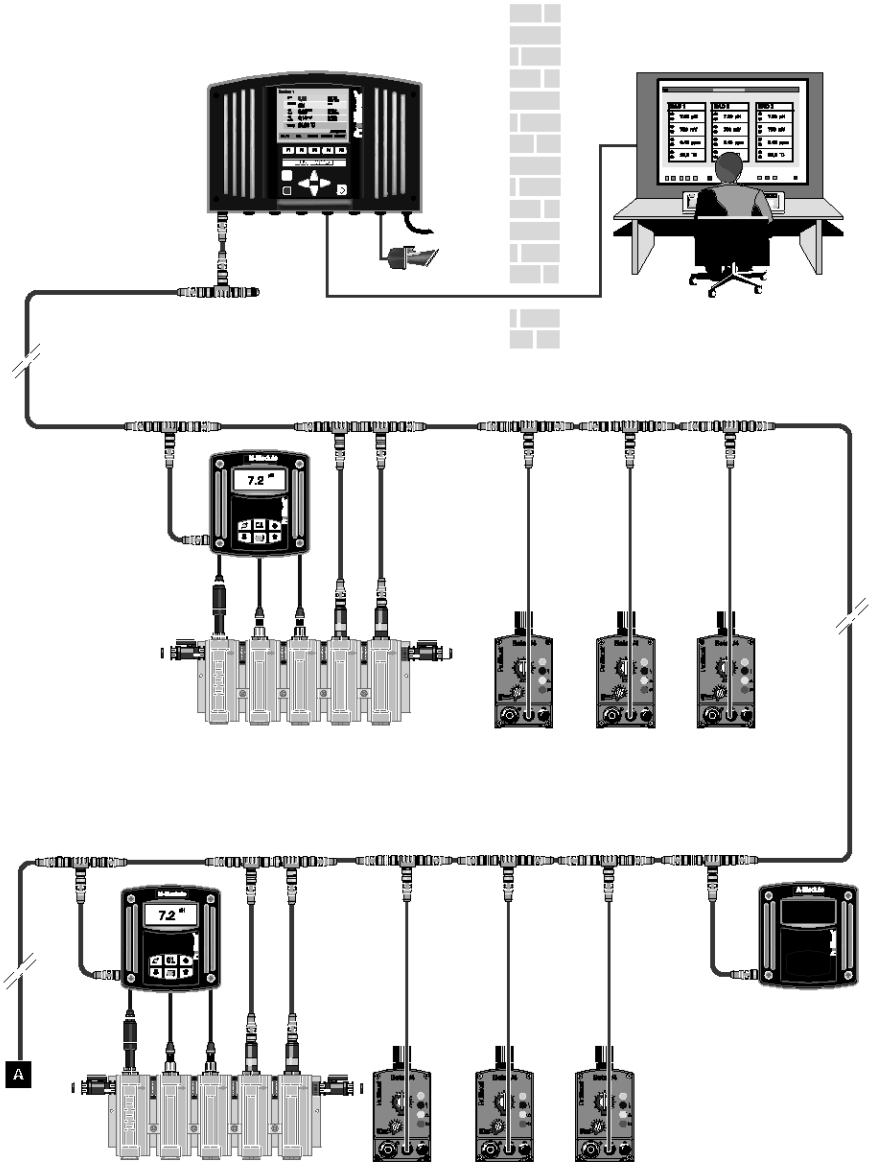

pk_5_050

8.13 Application Examples

A Dip pool
B Paddle pool
C (terminating resistor)
D Swimming pool

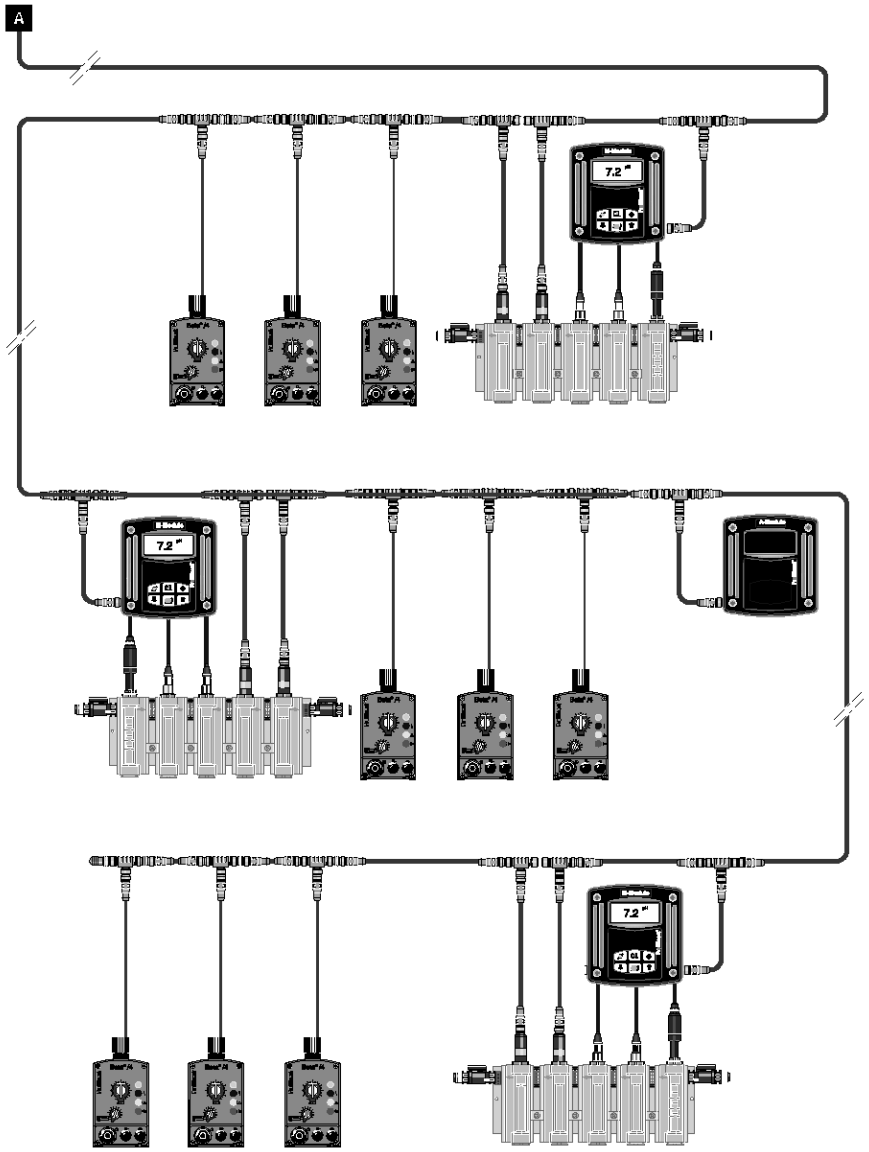

pk_5_051

8.13 Application Examples

Components of the measuring/control station

Quantity	Name	Parts number/Identcode	Chapter
1	DULCOMARIN® II central unit with screen writer, LAN connector and web+OPC server	DXCaW06100PSEN01	8.5.2
5	Measuring module DXMa, measurement and control of pH, redox, free and bound chlorine and temperature	DXMAMW0SEN01	8.7.7
5	Chlorine sensor CLE 3.1-CAN-10 ppm	1023426	8.5.17
5	Chlorine sensor CTE 1-CAN-10 ppm	1023427	8.5.17
10	Cable combination coax 2 m- SN6 - pre-assembled*	1024106	8.5.17
5	pH sensor PHEP 112 SE	150041	7.2.2
5	ORP sensor RHES-Pt-SE	150703	7.2.3
10 m	Signal lead, sold by the meter 2 x 0.25 mm^2 Ø 4 mm	725122	7.3.2
5	Bypass fitting DGMa with sample water limit contact	DGMa322T000	7.5.3
2	Power supply modules DXMaN	DXMANW300001	7.5.3
300 m	Connecting cable – CAN (by the metre)	1022160	8.5.17
5	CAN (by the metre) – connection kit	1026589	8.5.17

All cables, T-pieces and termination resistors needed to connect the sensors are supplied.

Benefits

- All hygiene parameters in the five filtration circuits, together with all key parameters, such as air conditioning or heating parameters in the building management system, can be displayed by the PLC server
- Monitoring of all measured values and control parameters from one central location, such as the pool plant room
- The integral data logger and screen writer document the hygiene parameters required by law

8.13 Application Examples

9 Domestic Water Plant

Contents Page

9.0 Systems For Domestic Water Installations 1
9.0.1 Proportional Flow Dosing System For Liquid Dosing 1

9.1 Promatik Proportional Metering Unit 2
9.1.1 Promatik 2
9.1.2 Promatik 3

9.2 DULCODOS® domestic Water Meter Controlled Dosing Plant 4
9.2.1 DULCODOS® domestic 4

9.3 Chemicals For Water Treatment 6
9.3.1 Chemicals 6

9.0 Systems For Domestic Water Installations

9.0.1 Proportional Flow Dosing System For Liquid Dosing

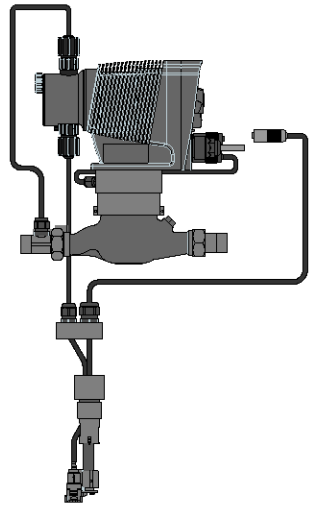

P_PNM_0001_SW1

Promatik, DULCODOS®

metering systems protect pipework, fittings, and devices, such as boilers, washing machines and dishwashers, against corrosion and lime scale. Active substances, such as silicate, phosphate or silicate phosphate mixtures can be metered here. These active substances form a protective layer in the pipework and reduce the aggressiveness and hardness sedimentation in the water:

Silicate

as a corrosion inhibitor to prevent rust formation: "brownish water" in galvanised piping systems, "pitting": needle-like holes in the piping. Applications include soft, corrosive waters with a high percentage of aggressive carbonic acid. The silicate is used to raise the pH value closer to a lime-carbonic acid equilibrium. Hydrolysis produces a silica gel that forms a thin protective layer in the pipework and fittings and thus prevents corrosion.

Phosphate

as ortho and polyphosphate to prevent lime scale and corrosion in hard water up to max. 20 CH (carbonate hardness). Hard water salts, such as calcium and magnesium ions, responsible for lime scale are thereby stabilised, i.e. these ions remain dissolved in the water and do not form lime scale on the pipe walls. Growth on the pipes is thus prevented and there are no deposits of lime scale on heating coils, dramatically reducing their efficiency. A thin, solid protective layer is formed. Mixtures containing silicate and phosphate act as corrosion and lime scale inhibitors for soft and medium-hard water. A continuous feed of the feed chemical is required to maintain this protective layer, otherwise it will degrade.

EXACTAPHOS®

The EXACTAPHOS® metering solutions are coordinated to the metering rates of the Promatik and DULCODOS® systems. This ensures that proportions permissible under the "German Drinking Water Directive" of max. 40 mg/l of SiO_2silicate and/or 6.7 mg/l of phosphate PO_4 (5 mg/l P_2O_5) are complied with.

Function of the systems

In a flow of water, the contact water meter transmits pulses with a fixed pulse spacing corresponding to the flow rate to the metering pump. Each of these pulses results in a metering stroke of the metering pump, thereby feeding the metering solution. The metering volume per stroke can thus be adjusted continuously between 100 and 50 % using the stroke adjustment knob. Because of the very low response threshold and the short pulse spacing, constant volume-proportional chemical metering can always be maintained from minimum to maximum water flow rate and thus also guarantees the best process result.

Promatik proportional metering unit

Consisting of a Beta® metering pump, contact water meter, suction fitting with foot valve and 2-phase level switch with pre-warning as protection against dry running und empty signal, metering valve and metering line. In the "R" version compact metering system, the metering pump is built onto the contact water meter. In the "W" version split metering system with wall brackets for mounting the metering pump, the contact water meter is installed horizontally.

DULCODOS® domestic

Consisting of a ProMinent® metering pump of the Beta® and gamma/ L series with pulse control option for increasing or decreasing the incoming pulses, accommodated on a stable, refillable metering tank with suction fitting and lockable screw cover, as well as a contact water meter. Manual or electronic agitators and further accessories can be installed. With the metering systems DULCODOS® domestic, the specific metering output can be adapted to individual requirements using the option Pulse Control, e.g. for chlorine metering in a domestic well water supply.

9.1 Promatik proportional metering unit

9.1.1 Promatik

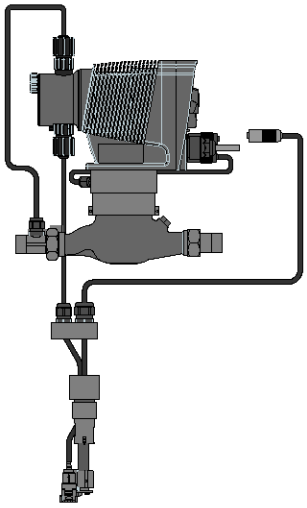

P_PNM_0001_SW1

Proportional metering unit for the flow-dependent, adjustable metering of liquid media, such as EXACTAPHOS®, in the drinking water sector, comprising a Beta® metering pump, contact water meter, suction fitting with foot valve and level switch, metering valve and metering line.

Version "**R**": compact metering unit, metering pump fitted on the metering unit. Horizontal installation (Fig. pk_4_001).

Version "**W**": split metering system with wall brackets to accommodate the metering pump. Contact cable and PE metering line 2 m long. The contact water meter is installed horizontally.

Promatik type		**NG 5**	**NG 10**	**NG 20**	**NG 30**
Maximum flow Q max.	m^3/h	5	11	16	27
Lower working limit	m^3/h	0.05	0.08	0.13	0.24
Metering interval approx.	l/stroke	0.7	1.1	1.8	2.8
Feed rate 50-100 %	ml/m^3	38 – 172	38 – 172	38 – 172	38 – 172
Max. operating pressure	bar	10	10	10	10
Metering pump type		BT4b 1000 PPT2	BT4b 1601 PPT2	BT4b 1602 PPT2	BT4b 1604 PPT2
Meter connecting thread		G 1 B	G 1 1/4 B	G 2 B	G 2 1/2 B
Screw connector width		R 3/4	R 1	R 1 1/2	R 2
Length without thread	mm	190	260	300	270

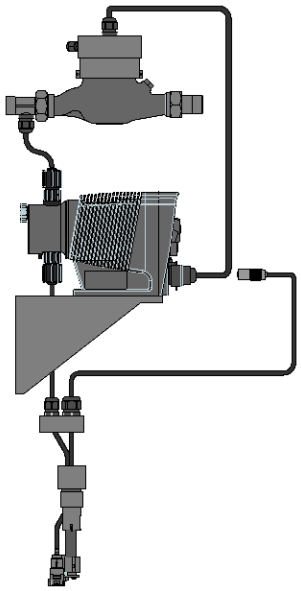

P_PNM_0002_SW1

9.1 Promatik proportional metering unit

9.1.2 Promatik

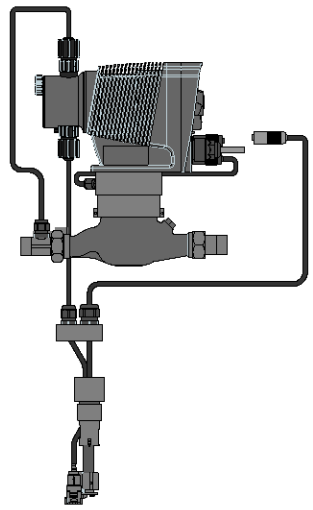

P_PNM_0001_SW1

	Shipping weight approx. kg	Order no.
NG 5 R compact metering system	6	1036414
NG 5 W split metering system	6	1036415
NG 10 R compact metering system	7	1036416
NG 10 W split metering system	7	1036417
NG 20 R compact dosing system	9	1036418
NG 20 W split dosing system	9	1036419
NG 30 R compact metering system	11	1038104
NG 30 W compact metering system	11	1038105

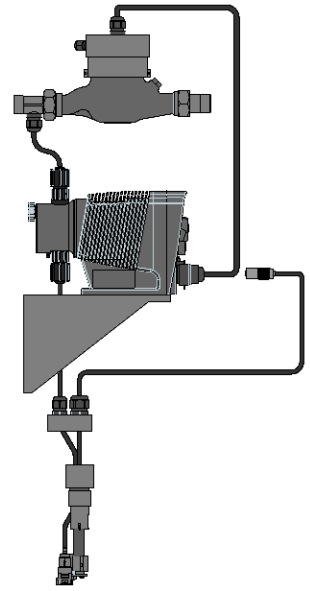

P_PNM_0002_SW1

Materials

Liquid end: Polypropylene (PP)

Valves: PVDF

Dosing diaphragm EPDM with PTFE insert

Seals: PTFE

Valve balls ceramic

Float switches PP

Suction assembly flexible PVC

Discharge tubing PE

9.2 DULCODOS® domestic Water Meter Controlled Dosing Plant

9.2.1 DULCODOS® domestic

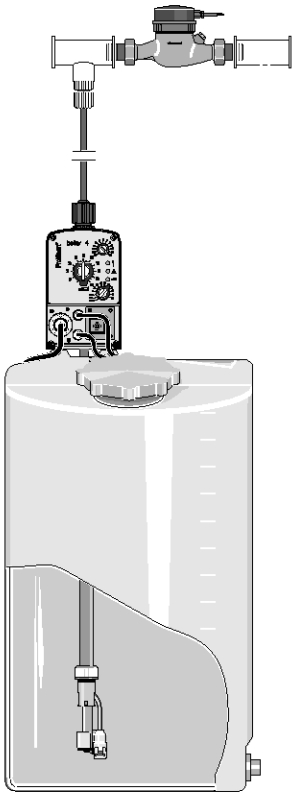

P_DD_0034_SW

Flow proportional flow dosing for potable and industrial water.

Included in delivery:

Contact water meter PN 16 - read-off - unions and seals.

Metering tank made of transparent PE with litre scale and lockable screw cover constructed with ProMinent® Beta® and/or gamma/ L metering pump with Option Pulse Control for flow-proportional metering. With operating, advance warning and empty indication, mains leads with safety plug and 2 meter contact lead.

Technical data

Water treatment chemicals see chapter 7.4.

Metering systems with Beta® metering pump

	Pump type	Max. flow rate	Max. pressure	Tank size	Connector width (KWM)	Pulse rate	Shipping weight	Order no.
		m³/h	bar	l	R	l	kg	
DN 10/16	BT4b1602NPT2	10	16	60	1	1	25	1008155
DN 10/16-140	BT4b1602NPT2	10	16	140	1	1	28	1008156
DN 20/10	BT4b1604NPT2	20	16	60	1 1/2	2	30	1008157
DN 20/10-140	BT4b1604NPT2	20	16	140	1 1/2	2	33	1008158
DN 30/10	BT5b1008NPT2	30	10	140	2	3	50	1008159

Max. temperature	45 °C
Electrical connection	100 - 230 V ±10%, 50/60 Hz
Feed rate	0.165…165 ml/m³

9.2 DULCODOS® domestic Water Meter Controlled Dosing Plant

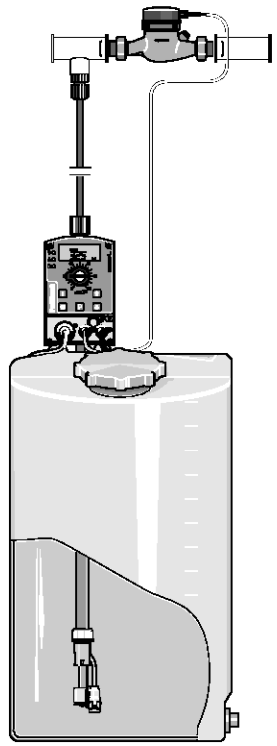

pk_4_004_2

Metering systems with metering pump gamma/ L

	Pump type	Max. flow rate	Max. pressure	Tank size	Connector width (KWM)	Pulse rate	Shipping weight	Order no.
		m^3/h	bar	l	R	l	kg	
DN 10/16	GALa1602NPB2	10	16	60	1	1	25	913051
DN 10/16-140	GALa1602NPB2	10	16	140	1	1	28	913052
DN 20/10	GALa1005NPB2	20	10	60	1 1/2	2	30	913053
DN 20/10-140	GALa1005NPB2	20	10	140	1 1/2	2	33	913054
DN 30/10	GALa1008NPB2	30	10	140	2	3	50	913055

Max. temperature	45 °C
Electrical connection	100-230 V ±10%, 50/60 Hz
Feed rate	0.165…165 ml/m^3, even higher concentrations possible at reduced flow

9.3 Chemicals For Water Treatment

9.3.1 Chemicals

EXACTAPHOS® SP 210

Silicate phosphate liquid metering solution. Drinking water treatment for soft water.
Compact metering system Promatik.

	Volume l	Order no.
EXACTAPHOS® SP 210	10	950044
EXACTAPHOS® SP 210	20	950097
EXACTAPHOS® SP 210	200	950043

EXACTAPHOS® P 612

Phosphate liquid metering solution. Drinking water treatment for medium hard water.
Compact metering system Promatik.

	Volume l	Order no.
EXACTAPHOS® P 612	10	950049
EXACTAPHOS® P 612	20	950098
EXACTAPHOS® P 612	200	950048

EXACTAPHOS® P 1020

Phosphate liquid metering solution. Drinking water treatment for hard water.
Compact metering system Promatik.

	Volume l	Order no.
EXACTAPHOS® P 1020	10	950054
EXACTAPHOS® P 1020	20	950099
EXACTAPHOS® P 1020	200	950053

ProMaqua® Equipment Catalogue

Products:

- For Disinfection
- For Oxidation
- Membrane Technology
- Gravity Filters

Issued by:
ProMaqua GmbH

ProMaqua GmbH
Maaßstraße 32/1
69123 Heidelberg · Germany
Telefone: +49 6221 6489-0
Fax: +49 6221 6489-400
info@promaqua.com
www.promaqua.com

Subject to technical amendments.

This product catalogue replaces
all previous catalogues and
price lists.

Heidelberg, January 2011

Table Of Contents

1 Dulcodes UV systems

1.1	General Notes On UV Treatment	1-1
1.2	Performance Overview Of Dulcodes UV Systems	1-4
1.3	Questionnaire For Designing A UV System	1-6
1.4	Dulcodes P UV Systems	1-7
1.5	Dulcodes D UV Systems For High Turbidity Water	1-8
1.6	Dulcodes K UV Systems With PE-HD Radiation Chamber	1-10
1.7	Dulcodes S UV Systems For Chloramine Control In Pool Water	1-11
1.8	Dulcodes Z UV Systems With Certified Performance	1-13
1.9	Dulcodes R UV Systems With Manual Wiper	1-15
1.10	Dulcodes W UV Systems	1-17
1.11	Dulcodes M UV Systems With Powerline Medium Pressure Lamps	1-19
1.12	Accessories For Dulcodes UV Systems	1-21

2 OZONFILT® And Bono Zon® Ozone Plants

2.1	Ozone In Water Treatment	2-1
2.2	Performance Overview Of Ozone Plants	2-2
2.3	Questionnaire On The Design Of An Ozone Plant	2-3
2.4	OZONFILT® OZVa	2-4
2.5	OZONFILT® OZMa	2-12
2.6	Bono Zon® Ozone Plants	2-20
2.7	Accessories For Ozone Plants	2-23

3 Chlorine Dioxide Plants Bello Zon®

3.1	Chlorine Dioxide In Water Treatment	3-1
3.2	Performance Overview Of Chlorine Dioxide Systems	3-3
3.3	Questionnaire On The Design Of A Chlorine Dioxide Plant	3-4
3.4	Bello Zon® Chlorine Dioxide Plants Type Legio Zon®	3-5
3.5	Bello Zon® Chlorine Dioxide Plants Type CDVc	3-8
3.6	Bello Zon® Chlorine Dioxide Plants type CDKc	3-11
3.7	Bypass Line Accessories	3-14
3.8	Chemicals Supply Accessories	3-16
3.9	Safety Accessories And Analysis	3-18

4 Electrolysis Plants CHLORINSITU®

4.1	Electrolysis Plants CHLORINSITU®	4-1
4.2	Performance Overview	4-2
4.3	Questionnaire on the design of an electrolysis plant	4-3
4.4	Tubular Cell Electrolysis Plants CHLORINSITU® II	4-4
4.5	Membrane Electrolysis Plants CHLORINSITU® III	4-5
4.6	Membrane Electrolysis Plants CHLORINSITU® IV compact	4-6
4.7	Membrane Electrolysis Plants CHLORINSITU® IV	4-7
4.8	Membrane Electrolysis Plants CHLORINSITU® IV plus	4-8
4.9	Gas Warning Device For Monitoring For Chlorine Gas	4-10

5 Membrane Technology

5.1	Overview Membrane Technology	5-1
5.2	Performance Overview Ultrafiltration	5-2
5.3	Performance Overview Of Nanofiltration	5-4
5.4	Performance Overview Reverse Osmosis	5-6
5.5	Questionnaire	5-8
5.6	Dulcoclean® Ultrafiltration Systems	5-10
5.7	Dulcosmose® Reverse Osmosis Plants	5-12

6 Gravity Filter

6.1	INTERFILT® SK	6-1

Capacity Data ProMaqua

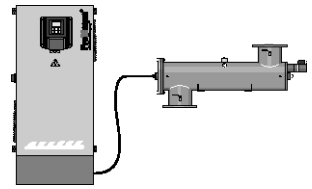

pk_7_051_V2

UV Systems Dulcodes

Dulcodes UV Disinfection Systems: 1-800 m^3/h

UV radiation ensures a safe, chemical-free and reliable disinfection of water. Even stubborn parasites such as Cryptosporidia or Giardia are rendered harmless. Convincing arguments for Dulcodes systems are:

- Uniform radiation
- Optimised plant hydraulics
- Lamp with high UV-C output and long life time
- System controller with numerous monitoring and reporting functions

Special units beyond the stated capacity ranges are available on request.

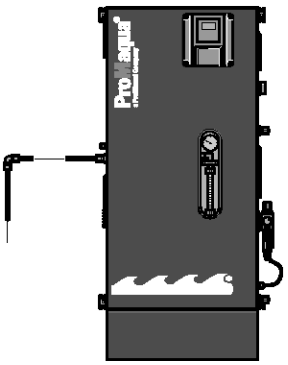

pk_7_043_V2

OZONFILT® OZVa 3; capacity: 35 g/h

Ozone Generation Plants

Ozone generation systems OZONFILT® 5-735 g/h

Ozone generation systems Bono Zon® 40-720 g/h

Ozone is the strongest disinfectant and oxidant permitted for water treatment. With an environmentally-friendly production process using air or oxygen, it decomposes to form oxygen after use and its concentration can be measured online at any time. It is the optimum solution for swimming pool water, drinking water, for the beverage industry or other industrial applications. ProMaqua offers systems complete with all accessories in almost every size.

Non-standard units beyond the stated capacity ranges are also available on request.

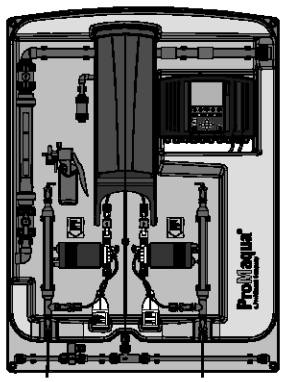

P_PMA_BEZ_0009_SW

CDVc 20-240 (figure shows optional configuration)

Bello Zon® Chlorine Dioxide Plants

Bello Zon® chloride dioxide generation systems: 5-10,000 g/h

Chlorine dioxide is establishing itself more and more as a universal disinfectant in applications, such as the disinfection of drinking water and industrial water, in the washing of food or in the treatment of cooling water and waste water. Being independent of the pH of the water, its action keeps systems free of biofilm.

- Powerful disinfection performance with maximum ecological sustainability
- Safe and reliable system technology conforming to DVGW Work Sheets W224 and 624
- Worldwide availability of expertise and service

Capacity Data ProMaqua

Electrolysis Plants

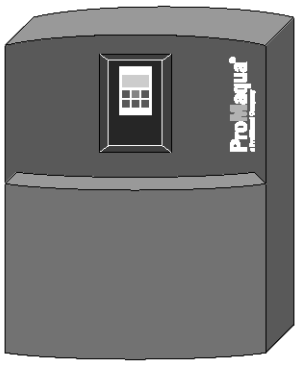

P_PMA_EL_0007_SW

CHLORINSITU® electrolysis systems: 25 - 3,500 g/h

The alternative to sodium hypochlorite and chlorine gas. Chlorine generated on site by electrolysis from harmless sodium chloride provides a highly cost-effective alternative to other chlorine products without the need to store hazardous chemicals on site.

Non-standard units beyond the stated capacity ranges are also available on request.

Membrane Filtration Plants

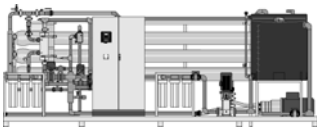

pk_7_074

Dulcoclean® ultrafiltration systems 1-80 m^3/h

Dulcosmose® nanofiltration systems 1-50 m^3/h

Dulcosmose® reverse osmosis systems 0.1-50 m^3/h

In water treatment membrane filtration is the technique with the lowest operation costs used to remove particles and salts in the water. For this area, ProMinent offers multiple and high quality systems.

Special units beyond the stated capacity ranges are available on request.

INTERFILT® SK Gravity Filter

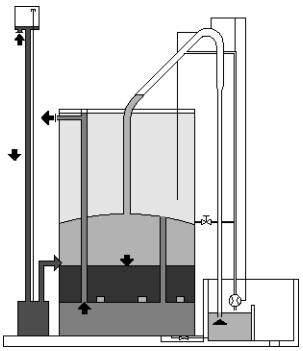

pk_7_029

INTERFILT® SK Gravity Filter: 6,5-62 m^3/h

Economical water treatment with gravity filters: open sand filter plants with differential pressure-controlled backwash and integrated backwash water reservoir work automatically and with no maintenance or wear and tear.

Special units beyond the stated capacity ranges are available on request.

1 Dulcodes UV systems

Contents Page

1.1 General Notes On UV Treatment 1
1.1.1 Applications Of Dulcodes UV Systems 1
1.1.2 Description Of Dulcodes UV Systems 2

1.2 Performance Overview Of Dulcodes UV Systems 4
1.2.1 Notes On Planning And Designing An UV System 5

1.3 Questionnaire For Designing A UV System 6

1.4 Dulcodes P UV Systems 7

1.5 Dulcodes D UV Systems For High Turbidity Water 8

1.6 Dulcodes K UV Systems With PE-HD Radiation Chamber 10

1.7 Dulcodes S UV Systems For Chloramine Control In Pool Water 11

1.8 Dulcodes Z UV Systems With Certified Performance 13

1.9 Dulcodes R UV Systems With Manual Wiper 15

1.10 Dulcodes W UV Systems 17

1.11 Dulcodes M UV Systems With Powerline Medium Pressure Lamps 19

1.12 Accessories For Dulcodes UV Systems 21

1 Dulcodes UV systems

1.1 General Notes On UV Treatment

Disinfection is a fundamental step in modern water treatment. UV disinfection is being used to an ever increasing extent here, as a safe, chemical-free and reliable disinfection process. Extensive research projects and numerous trouble-free operational systems prove the safety and reliability of UV disinfection.

With UV disinfection, the water to be disinfected is irradiated with ultraviolet light, which involves a purely physical, chemical-free process for water disinfection.

UV-C radiation in particular, with a wavelength in the 240 to 280 nm range, attacks the vital DNA of the bacteria directly. The radiation initiates a photochemical reaction and destroys the genetic information contained in the DNA. The bacteria lose their reproduction capability and are destroyed. Even parasites such as Cryptosporidia or Giardia, which are extremely resistant to chemical disinfectants, are efficiently reduced.

The initiation of photochemical reactions is utilised in other applications too. The undesirable combined chlorine in swimming pool water is reduced by UV radiation, as a result of which enormous fresh water savings are achieved. Oxidants such as ozone, chlorine or chlorine dioxide are reliably reduced in the production water used in the food and beverages industry, avoiding the need for costly activated charcoal filters.

Special version systems with special lamps and special composition of the radiation chamber can be used for reduction of TOC (Total Organic Carbon) in the treatment of ultrapure water.

UV disinfection has many advantages:

- Immediate and safe destruction of the bacteria without addition of chemicals
- Photochemical reduction of undesirable substances
- No THM or AOX formation, no formation of other undesirable substances
- No impairment of odour or taste of the water
- No storage and handling of chemicals required
- Effect is independent of pH
- No reaction vessel or reaction tank required
- Low space requirement
- Low investment and operating costs with high reliability and efficiency

1.1.1 Applications Of Dulcodes UV Systems

A large number of UV disinfection systems have been supplied worldwide, for the most diverse applications:

- **Own source water suppliers and municipal water works**
  for disinfection of drinking water
- **Food and beverages industry**
  to destroy the bacteria in the water needed for food and beverages production and for disinfection of service water
  to reduce the chlorine dioxide in the production water
- **Pharmaceuticals and cosmetics industry**
  to maintain the high microbiological requirements of the production water
  to destroy residual ozone in the production water without use of activated charcoal filters
- **Reverse osmosis plants**
  for permeate disinfection
- **Municipal sewage plants**
  for reduction of the bacterial count in the sewage plant outflow
  for reduction of the bacterial count in the industrial water extracted from the sewage plant outflow
- **Horticulture**
  for disinfection of the irrigation water
- **Spa pools and swimming pools**
  for disinfection of the pool water
  for chloramine reduction in the pool water
- **Semiconductor industry**
  for reduction of TOC and to maintain the high microbiological requirements of the production water

1 Dulcodes UV systems

1.1.2 Description Of Dulcodes UV Systems

Basically, Dulcodes UV disinfection systems consist of:

- High-quality radiation chambers made from stainless steel (DIN 1.4404 or 1.4571) or UV-resistant plastic
- Lamp protection tubes made from high-quality quartz, easily removable for cleaning purposes
- Lamps with a particularly high UV output in the 254 nm range, ensuring an outstanding disinfection characteristic
- Highly selective UV sensors with good long-term and temperature stability
- UV system controllers and modern electronic ballasts fitted in a control cabinet

The special features of our Dulcodes UV disinfection systems are:

- Even irradiation of the entire water flow through optimised system hydraulics, so ensuring outstanding disinfection results
- Flow-optimised inlet zone
- Longitudinal flow against UV lamps with high turbulence
- Use of UV lamps with long lamp life time and high UV-C output
- Automatic cleaning system for the sleeve of medium-pressure lamps
- Manual cleaning system for the sleeve of system type Dulcodes R or Dulcodes S
- System controller with comprehensive monitoring and reporting functions
- Display of all important operating parameters and reporting of faults in plain text
- Trend display of the variation of the UV sensor signal with time
- Analogue output sensor signal and alarm relay
- Use of modern electronic ballasts with bus technology for lamp-friendly ignition and operation
- Individual lamp monitoring
- Direct control of automatic isolation and flushing valves

Dulcodes UV Lamps

Standard low pressure lamp

Robust low pressure mercury lamp with a life expectancy of approx. 14,000 operating hours. The operating temperature of the lamp is 30-50 °C. This is why its use is limited to water temperatures between 5 and 40 °C. The output is approx. 100 W per metre arc length.

Low pressure lamp High-Flux

Low pressure amalgam lamp with a life expectancy of approx. 10,000 operating hours. The operating temperature of the lamp is 100-130 °C. This is why its use is limited to water temperatures of up to 70 °C. The output is independent of the water temperature and is approx. 200 W per metre arc length.

Low pressure lamp Opti-Flux

Doped, high-performance low pressure amalgam lamp with a life expectancy of approx. 14,000 operating hours. The operating temperature of the lamp is 100-130 °C. This is why its use is limited to water temperatures of up to 70 °C. The output is independent of the water temperature and is approx. 300 W per metre arc length.

Medium pressure lamp Powerline

Medium pressure mercury lamp with a life expectancy of approx. 6,000 to 10,000 operating hours, depending on lamp size. The high output of these lamps (up 10,000 W per metre arc length) permits the treatment of very large flows. Thanks to their broad range spectrum, these lamps are specifically suitable for photochemical processes. The operating temperature of the lamp is 650-850 °C. Powerline medium pressure lamps are typically operated with a mechanical wiper system. This is why their use is limited to water temperatures of up to 40 °C.

1 Dulcodes UV systems

Dulcodes UV Controllers

Compact controller

Compact unit for control of all basic functions of the UV system. The large graphical display shows the current UV-C output, the operating hours and the number of lamp switch-ons. With the fixed-setting warning and safety threshold levels, a warning signal is generated and a relay output (230 V / 0.2 A) for operation of an shut-off valve is actuated if the UV output is too low. Alternatively, this output can also be used as a common alarm relay (230 V / 2.5 A).

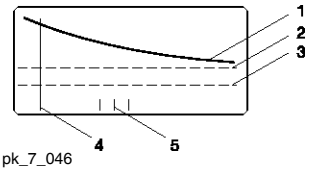

pk_7_046

1 UV sensor signal
2 Warning threshold
3 Safety threshold
4 Calibration
5 On/off contacts

Comfort control

The Dulcodes comfort control includes a large, graphical display for viewing the UVC sensor signal. Shown as a trend display, the lamp ageing, any possible deposit formation on the lamp protection tube or a change in water quality can be seen in a time window. The freely programmable safety and alarm thresholds are also shown as well as the number and times of the lamp activations. All operating and error messages are shown in full text. Setting the operating parameters is facilitated by the clear menu navigation. The control offers a selection of 9 different languages.

The control is connected to the ballasts via a bus system which permits monitoring of each individual lamp. This also facilitates a spatial separation of the control over long distances from the radiation chamber including lamps and ballasts.

Various additional functions such as the automatic flushing of the system in a freely programmable flushing time, the control of a shut-off valve as well as of a circulating pump are integrated as standard. For this purpose, 2 voltage outputs 230 V / 0.2 A and a switching output 230 V / 2.5 A are integrated.

The UVC sensor signal can be monitored online via a standard signal output 0/4-20 mA. If the alarm and safety thresholds are undershot, two relay outputs (230 V / 2.5A) send a corresponding signal. All other faults are signalled via a combined alarm relay (230 V / 2.5 A).

3 potential-free control inputs facilitate linking of the control with external information: The error input can e.g. be used for an external temperature monitoring, the operation of the system can be normally interrupted using the pause input, the flow monitoring can be of help in connection with flushing processes.

Comfort control Powerline

This control type in addition includes the option for an external power control via a standard signal 0/4-20 mA (not for Dulcodes M 2 kW, 3 kW, and Dulcodes S). The systems can thus e.g. be controlled independent of the flow or the lamp output can be automatically adapted to a defined UVC sensor signal. This saves energy costs and extends the lamp life time of the lamps.

The control also is equipped with a display and monitoring of the temperature of the radiation chamber as well as with a freely programmable control of the mechanical wiper system for an automatic cleaning of the lamp protection tube.

1 Dulcodes UV systems

1.2 Performance Overview Of Dulcodes UV Systems

ProMaqua offers a wide range of UV systems for the most diverse applications. The following overview shows the output and main applications of our standard systems:

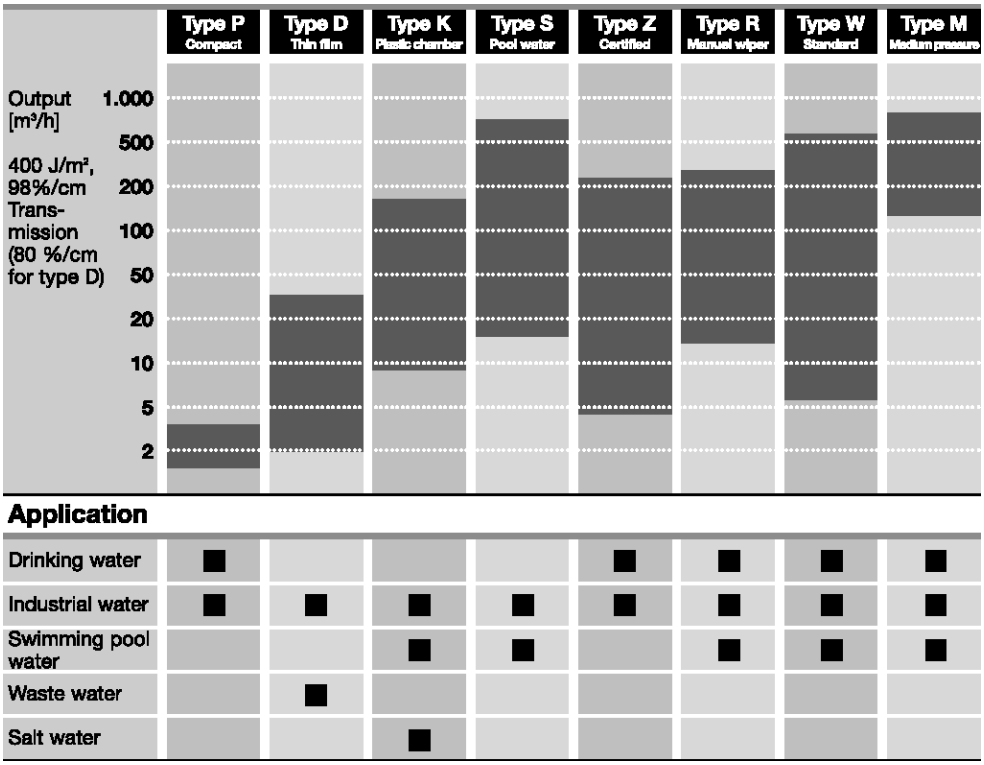

P_PMA_DS_0020_SW

We offer a full advisory service covering everything required for safe use of a Dulcodes UV system:

- Assessment of the situation on site by trained, competent field employees.
- All water parameters needed for an optimum system design can be measured in our water laboratory.
- Design and planning of the system.
- Commissioning and system maintenance by our trained service technicians.

1 Dulcodes UV systems

1.2.1 Notes On Planning And Designing An UV System

- The system must always be designed for the greatest water flow.
- The system must always be designed for the worst anticipated UV transmission.
- Fireproof sampling cocks for microbiological tests must be provided before and after UV disinfection systems.
- A manual shut-off valve must be provided before the UV system to isolate the system for maintenance work.
- With drinking water disinfection and similar applications, an electrically-controlled shut-off valve must be provided after the UV disinfection system, which also closes automatically on mains failure (solenoid valve, automatic closing flap valve or similar).
- With service water disinfection, it is normally sufficient to provide a manual valve to isolate the system for maintenance work, instead of the electrically-controlled valve.
- With drinking water disinfection and similar applications, a flushing valve must be provided after the UV disinfection.
- It must be ensured that there is sufficient space available for removing the lamp protection tube and lamp replacement.
- Modern electronic ballasts only allow a limited cable length between ballast and lamp, so that the control box with the ballasts must be positioned close to the lamp. On the other hand, the controller can be fitted in a control area, for example. However, the maximum cable lengths specified by us must not be exceeded in this case.

1 shut-off valve
2 Sampling cock
3 Flushing valve
4 shut-off valve
5 Controller/ballast
6 Radiation chamber

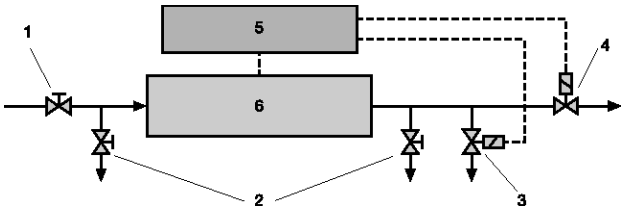

pk_7_059

Typical installation schematic of a UV disinfection system

The following details are required for design of a UV system:

- Application of the system
- Maximum water flow
- Minimum UV transmission of the water

The UV transmission must be determined by means of a laboratory measurement of the absorption at 254 nm.

A full water analysis gives important conclusions on the operating conditions of the system. The following questionnaire provides our project engineers with the information needed to design an appropriate system.

1 Dulcodes UV systems

1.3 Questionnaire For Designing A UV System

Application of the UV system:

☐ for disinfection of

- ☐ drinking water
- ☐ production water in the food industry, cosmetics or pharmaceuticals
- ☐ utility water
- ☐ wastewater
- ☐ salt water or brackish water
- ☐ _____

☐ for photochemical reduction of

- ☐ ____ ppm ozone
- ☐ ____ ppm chlorine dioxide
- ☐ ____ ppm chlorine
- ☐ ____ ppm chloramine

Water data:

Maximum water flow _____ m^3/h Maximum water pressure _____ bar

Minimum UV transmission at 254 nm _____ %/1 cm _____ %/10 cm _____ SAC 254 nm

Turbidity _____ FTU _____ NTU

Suspended particles content _____ mg/l

Water quality ☐ constant ☐ fluctuating

Total hardness _____ mmol/l _____ °dH

Carbonate hardness _____ mmol/l _____ °dH

Chloride _____ mg/l

Manganese _____ mg/l

Iron _____ mg/l

Water temperature _____ °C

Other requirements:

_____

_____

_____

_____

_____

1 Dulcodes UV systems

1.4 Dulcodes P UV Systems

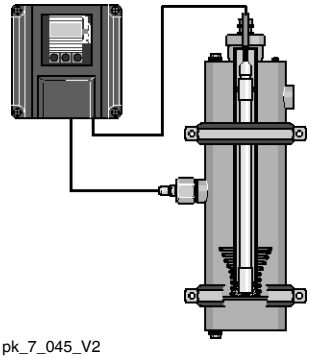

pk_7_045_V2

Dulcodes P UV systems are used for disinfection of drinking water and service water and – depending on transmission – can be used with flows up to 4 m^3/h.

Features

- Flow: up to 4 m^3/h (depending on transmission)
- Controller with switching output, to which an shut-off valve or fault indicating device can be connected
- High-quality, factory-calibrated UV sensor
- Graphical display to show UV intensity, total number of operating hours and number of lamp switchings
- Standard low pressure lamp with a lamp life time of approx. 10,000 – 14,000 operating hours
- Radiation chamber made from high-grade stainless steel 1.4571 or 1.4404
- Controller and ballast in compact plastic housing

Main applications

Drinking water	Industrial water	Swimming pool water	Wastewater	Salt water
✔	✔			

Technical Data

Type	Max. flow	Lamp power	Connected load	Radiation chamber length	Minimum clearance for maintenance work	Ø	Empty weight/ Operating weight	Connection nominal diameter
	m^3/h	W	W	mm	mm	mm	kg	
16P	1.5*	16	30	382	350	114	6/10	G 3/4"
45P	3.8*	45	60	940	900	114	10/20	G 1 1/4"

Lamp type	Standard low pressure lamp (see Chap. 1.3.1)
Controller type	Compact controller (see Chap. 1.3.2)
Permissible operating pressure	10 bar
Permissible ambient temperature	5–45 °C
Permissible water temperature	5–40 °C

* 98 %/cm transmission; 400 J/m^2 UV dose

Spare Parts For Dulcodes P UV Systems

Name of the item	Order no.
UV lamp 16 W	1002472
UV lamp 45 W	1002473
O-ring for fixing the lamp in the lamp sleeve	481016
Lamp protection tube for 16 P	1004450
Lamp protection tube for 45 P	1002468
O-ring lamp protection tube/lamp cover	1004920
UVC sensor P/D/W/R G 3/4 1.4539 for systems delivered from Sept. 2006	1004734
O-ring UVC sensor	1002175
Sensor cable 2 m long	1004411
Screwed plug G 1/4"	1002752
O-ring for G 1/4" screwed plug	741256

1 Dulcodes UV systems

1.5 Dulcodes D UV Systems For High Turbidity Water

Dulcodes D thin-film type UV systems with High-Flux lamps are used for disinfection of high turbidity or discoloured service water or wastewater and – depending on transmission – can be used with flows up to 33 m^3/h.

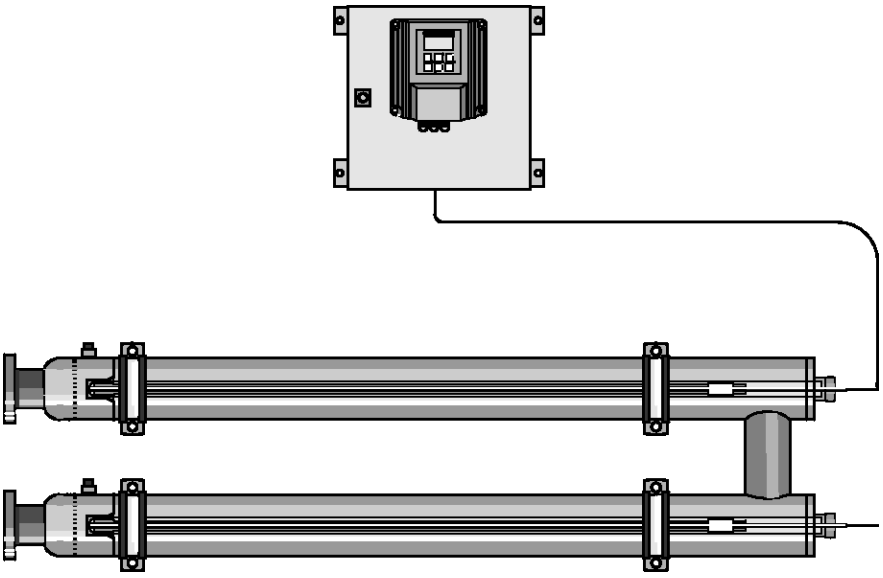

pk_7_050

Features

- Flow: up to 33 m^3/h (depending on transmission)
- Standard chambers made up of one or more longitudinal flow radiation chambers arranged one after the other, each with its own lamp
- High-efficiency low pressure High-Flux lamp with special amalgam technology, increased UV output, largely independent of temperature
- Lamp life time: approx. 10.000 h
- Ballasts with BUS interface for ignition and monitoring of each individual lamp
- Variable lamp current, hence lamp-friendly ignition process and precise adjustment of the optimum lamp operating current
- Long-term stable UV-C sensor for monitoring the disinfection capability and transmission (UV transmission factor) of the water, factory-calibrated
- Large graphical display for display of the sensor signal
- Monitoring of lamp ageing, lamp sleeve fouling and changes in water quality
- Freely programmable controller, e.g. for different flushing, warning and shutdown procedures
- Radiation chambers made from high-grade stainless steel 1.4571 or 1.4404
- Control cabinets made from coated steel
- Complete cleaning system available as an accessory and consisting of acid tank, circulating pump, valves and hoses for rapid chemical cleaning of lamp sleeve and radiation chamber.

Main applications

Drinking water	Process water	Swimming pool water	Wastewater	Salt water
—	✔	—	✔	—

1 Dulcodes UV systems

Technical Data

Type	Max. flow	Lamp power	Connected load	Radiation chamber length	Minimum clearance for maintenance work	Ø	Empty weight/ Operating weight	Connection nominal diameter
	m^3/h	W	W	mm	mm	mm	kg	
1x45 D**	2.0*	1x45	60	940	900	89	10/15	1"
1x130 D	4.6*	1x130	150	940	900	89	10/15	1"
1x230 D	8.2*	1x230	250	1,500	1,400	89	18/25	DN 65
2x230 D	16.0*	2x230	500	1,500	1,400	89	36/50	DN 65
3x230 D	25.0*	3x230	750	1,500	1,400	89	54/75	DN 65
4x230 D	33.0*	4x230	1,000	1,500	1,400	89	72/100	DN 65

* 80 %/cm transmission; 400 J/m^2 UV dose

Lamp type	Standard low pressure lamp (see Chap. 1.3.1) with 1x45 D High-Flux low pressure lamp (see Chap. 1.3.1) with 1x130 D - 4x230 D
Controller type	Compact controller (see Chap. 1.3.2) with 1x45 D De luxe controller (see Chap. 1.3.2) with 1x130 D - 4x230 D
Permissible operating pressure	10 bar
Permissible ambient temperature	5–40 °C
Permissible water temperature	5-70 °C **5-40 °C

Spare Parts For Dulcodes D UV Systems

	Order no.
UV lamp 45 W	1002473
High-Flux UV lamp 130 W	1002486
High-Flux UV lamp 230 W	1002487
Lamp protection tube für Dulcodes 45 D und 130 D	1002468
Lamp protection tube for Dulcodes 1-6x230 D	1002469
O-ring lamp protection tube/lamp cover	1004920
UVC sensor P/D/W/R G 3/4 1.4539 for systems delivered from Sept. 2006	1004734
O-ring UVC sensor	1002175
Sensor cable, 5 m long	1004412
Screwed plug G 1/4"	1002752
O-ring for G 1/4" screwed plug	741256
Replacement filter mat for control cabinet ventilation (2 pcs. required per control cabinet)	1004212
Hook spanner (special tool required for lamp replacement)	1002764

1 Dulcodes UV systems

1.6 Dulcodes K UV Systems With PE-HD Radiation Chamber

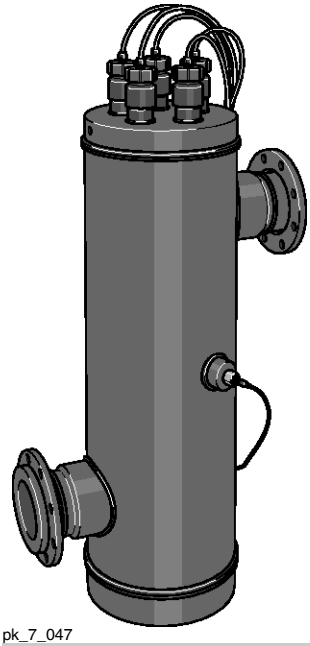

pk_7_047

The Dulcodes K range of UV systems with High-Flux lamps can be used for disinfection of saline water (thermal spring water, sea water). The radiation chambers are made from high-grade plastic and are optimised for compressive strength by special welding procedures (can be used up to an operating pressure of 4 bar). Depending on transmission, the range can be used with flows up to 170 m^3/h

Features

- Flow: up to 170 m^3/h (depending on transmission))
- High-efficiency low pressure High-Flux lamp with special amalgam technology, increased UV output, largely independent of temperature
- Lamp life time: approx. 10,000 h
- Ballasts with BUS interface for ignition and monitoring of each individual lamp
- Variable lamp current, hence lamp-friendly ignition process and precise adjustment of the optimum lamp operating current
- Long-term stable salt water-resistant UV-C sensor for monitoring the disinfection capability and transmission (UV transmission factor) of the water, factory-calibrated
- Large graphical display for display of the sensor signal
- Monitoring of lamp ageing, lamp sleeve fouling and changes in water quality
- Freely programmable controller, e.g. for different flushing, warning and shutdown procedures
- Radiation chambers made from UV-stabilised PE-HD
- Control cabinets made from coated steel

Main applications

Drinking water	Process water	Swimming pool water	Wastewater	Salt water
✔	✔	✔	—	✔

Technical Data

Type	Max. flow	Lamp power	Connected load	Radiation chamber length	Minimum clearance for maintenance work	Ø	Empty weight/ Operating weight	Connection nominal diameter
	m^3/h	W	W	mm	mm	mm	kg	
1x130K	8.7*	1x130	150	1,371	1,400	125	12/18	DN 50
2x130K	37.0*	2x130	280	1,371	1,400	280	38/78	DN 100
3x130K	54.0*	3x130	420	1,371	1,400	280	40/78	DN 100
4x130K	99.0*	4x130	550	1,371	1,400	400	48/160	DN 150
5x130K	122.0*	5x130	680	1,371	1,400	400	50/160	DN 150
6x130K	148.0*	6x130	810	1,371	1,400	400	52/160	DN 150

* 98 %/cm transmission; 400 J/m^2 UV dose

Lamp type	High-Flux low pressure lamp (see Chap. 1.3.1)
Controller type	De luxe controller (see Chap. 1.3.1)
Permissible operating pressure	4 bar
Permissible ambient temperature	5–40 °C
Permissible water temperature	5–30 °C

Spare Parts For Dulcodes K UV Systems

	Order no.
High-Flux UV lamp 130 W	1002486
Lamp protection tubefor Dulcodes K	1006385
O-ring lamp protection tube/lamp cover	1006332
UVC sensor K red brass	1006329
O-ring UVC sensor	1002175
Sensor cable, 5 m long	1004412
Replacement filter mat for control cabinet ventilation (2 pcs. required per control cabinet)	1004212

1 Dulcodes UV systems

1.7 Dulcodes S UV Systems For Chloramine Control In Pool Water

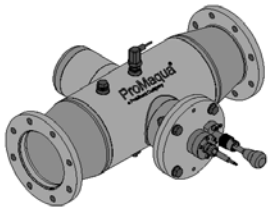

P_PMA_DS_0018_SW1

Dulcodes S UV treatment systems are suitable for a photochemical degradation of combined chlorine (chloramine) in swimming pool water treatment. Special medium pressure UV lamps generate the intensive polychromatic UV radiation to reduce the odour-intensive and eye-irritating substances. The result is an improved water quality for healthy and pleasant bathing.

Features

- Flow: up to 750 m^3/h (depending on transmission rate and radiation intensity).
- Extremely compact inline system with minimum space requirement.
- Simple installation thanks to minimal installation and fast retrofitting.
- Ultra-flexible installation thanks to free choice of installation location.
- Powerline S type medium-pressure lamp with a high connected load of up to 3 kW per metre of arc length.
- High gas pressure and relatively high lamp operating temperature of 600 to 800 °C, hence broad emission spectrum.
- Lamp life time: approx. 6,000-8,000 h depending on lamp size.
- Long-time stable UVC sensor for monitoring the lamp output, the lamp protection tube contamination as well as changes in the water quality.
- Integral temperature sensor for monitoring the water temperature in the radiation chamber.
- Large graphical display to show the sensor signal with trend line of the variation of the UV sensor signal over time.
- Manual power control via manual step switch to perfectly adapt the system to the relevant capacity needed (not suitable for use with Dulcodes 1 x 0.65 and 1S).
- Automatic chloramine value-dependent on/off control, for instance when used in conjunction with the DULCOMARIN® II.
- Optional: Manual or automatic wiper system for efficient removal of deposits on the lamp protection tube. The wiper system is simple to retrofit.
- Radiation chambers made from high-grade stainless steel 1.4571 or 1.4404.
- Control cabinet made of coated steel.
- Optimum energy use thanks to large radiation chamber and even radiation of the entire water flow due to improved system hydraulics.

Application focuses

Drinking water	Industrial water	Swimming pool water	Waste water	Salt water
-	✔	✔	-	-

1 Dulcodes UV systems

Technical Data

Type	Max. flow	Lamp power	Connected load	Radiation chamber length	Minimum clearance for maintenance work	Min. distance from wall	Empty weight/ Operating weight	Connection nominal diameter can be selected
	m^3/h	kW	kW	mm	mm	mm	kg	mm
1x0,65S	17.0*	0.65	0.75	500	335	160	21/31	65/80
1x1S	51.0*	1.00	1.10	700	400	450	31/47	100/125
1x2S	89.0*	2.00	2.10	700	500	550	38/65	125/150
1x3S	177.0*	3.00	3.20	800	600	650	52/118	200/250
2x2S	240.0	4.00	4.20	900	1,000	670	78/166	200/250
2x3S	330.0	6.00	6.20	900	1,000	670	78/166	250
3x3S	500.0	9.00	9.20	900	1,000	670	78/166	250/300

* 98 %/cm transmission; 600 J/m^2 UV dose

Lamp type	Powerline S medium pressure lamp (see Chap. 1.3.1)
Controller type	Powerline S comfort control
Permissible operating pressure	6 bar
Permissible ambient temperature	5–40 °C
Permissible water temperature	5–40 °C

Replacement parts for Dulcodes S UV systems

	Order no.
UV lamp Powerline 0.6/1 kW	1035179
UV lamp Powerline 2 kW	1035057
Powerline UV lamp 3 kW	1009385
Lamp protection tube for Dulcodes 0.6 S	1035218
Lamp protection tube for Dulcodes 1 S	1035166
Lamp protection tube for Dulcodes 2 S	1035041
Lamp protection tube for Dulcodes 3 S	1035193
Wiper element (2 required per UV lamp)	1027879
Spare part set UV S 1-3 kW motor wiper	1037735
Spare part set UV S 2x2 kW and 2x3 kW motor wiper	1037756
Spare part set UV S 3x3 kW motor wiper	1037757
O-ring lamp protection tube/lamp cover	790410
UVC-U sensor M 1.4539	1034147
O-ring UVC sensor	1002175
Sensor cable, 5 m long	1009398
Replacement filter mat for control cabinet ventilation (2 pcs. required per control cabinet)	1004212

1 Dulcodes UV systems

1.8 Dulcodes Z UV Systems With Certified Performance

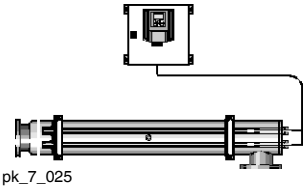

pk_7_025

Dulcodes Z UV disinfection systems serve the disinfection of drinking and industrial water and can be used - depending on transmission - for flows between 2 and 230 m^3/h.

All Dulcodes Z systems are DVGW-certified and meet the requirements of the DVGW Test Regulation W 294. This test regulation requires comprehensive biodosimetric measurements as a proof of the required effectiveness of the disinfection.

The list of the treatment substances and disinfection processes according to section 11 German Drinking Water Ordinance 2001 specifies that in Germany only UV systems may be used for drinking water disinfection which meet the requirements according to the DVGW Test Regulation W 294.

Features

- Flow: up to 230 m^3/h (depending on transmission rate)
- High-efficiency, low pressure lamp Opti-Flux with special amalgam technology, increased UV output, largely independent of temperature
- Lamp service life: 14,000 h
- Low maintenance costs as a result of higher output per lamp and longer lamp service life
- Electronic ballast units with BUS interface for ignition and monitoring of each individual lamp
- Variable lamp current, hence lamp-friendly ignition process and precise adjustment of the optimum lamp operating current
- DVGW-certified UVC sensor for monitoring the disinfection performance and transmission (UV transparency) of the water
- Sensor calibration function in compliance with DVGW specifications
- Large graphical display for display of the sensor signal and operating messages in plain text
- Monitoring of lamp ageing, lamp sleeve fouling and changes in water quality
- Freely-programmable control, for instance for various different rinsing, warning and switching processes
- Radiation chambers made from high-grade stainless steel 1.4404
- Radiation chamber hydraulics optimised by computer simulation
- Control cabinets made from coated steel

Main applications

Drinking water	Process water	Swimming pool water	Wastewater	Salt water
✔	✔	—	—	—

Technical Data

Type	Max. flow	Lamp power	Connected load	Radiation chamber length	Minimum clearance for maintenance work	Ø	Empty weight/ Operating weight	Connection nominal diameter
	m^3/h	W	W	mm	mm	mm	kg	
75Z* **	4.5*	1x75	90	1,115	910	140	12/27	G 1 1/4"
200Z	10.0*	1x200	220	1,040	785	140	16/30	DN 50
300Z	20.0*	1x300	320	1,540	1,285	140	25/47	DN 80
2x300Z	60.0*	2x300	650	1,590	1,560	219	39/97	DN 100
3x300Z	110.0*	3x300	1,000	1,625	1,695	219	39/97	DN 150
4x300Z	165.0*	4x300	1,300	1,630	1,563	273	56/143	DN 150
5x300Z	230.0*	5x300	1,600	1,630	1,590	273	56/144	DN 200
7x300Z	230.0**	7x300	2,200	1,630	1,590	324	73/201	DN 200

* 98 %/cm transmission; 400 J/m^2 UV dose

** 94 %/cm transmission; 400 J/m^2 UV dose

Lamp type	Standard low pressure lamp (see Chap. 1.3.1) with Type 75 Z Opti-Flux low pressure lamp (see Chap. 1.3.1) with Types 200 Z to 7x300 Z
Controller type	De luxe controller (see Chap. 1.3.2) UVC sensor signal in W/m^2 which can be calibrated with the help of a reference radiometer (see Chap. 1.11)
Permissible operating pressure	10 bar
Permissible ambient temperature	5–40 °C
Permissible water temperature	5 - 70 °C ***5-30 °C

1 Dulcodes UV systems

Spare Parts For Dulcodes Z UV Systems

	Order no.
OptiFlux UV lamp 75 W	1020911
Opti-Flux UV lamp 200 W	1021008
Opti-Flux UV lamp 300 W	1020929
Lamp protection tube for Dulcodes 75 Z	1020845
Lamp protection tube for Dulcodes 200 Z	1021010
Lamp protection tube for Dulcodes 1-7x300 Z	1020846
O-ring lamp protection tube/lamp cover	1023569
UVC sensor Z 1.4404 DVGW	1022347
Sensor window G 1x20 for Dulcodes 75, 200, 2x300Z	1021113
Sensor window G 1x30 for Dulcodes 300, 3x300Z	1022377
Sensor window G 1x47.5 for Dulcodes 4-7x300Z	1023884
O-ring sensor window	1023570
Lamp cable, 3.5 m long	1017867
Lamp cable, 7.5 m long	1024826
Sensor cable, 5 m long	1021041
Extension for sensor cable, 5 m long	1024825
Screwed plug G 1/4"	1002752
O-ring for G 1/4" screwed plug	741256
Replacement filter mat for control cabinet ventilation (2 pcs. required per control cabinet)	1004212

1 Dulcodes UV systems

1.9 Dulcodes R UV Systems With Manual Wiper

Dulcodes R UV systems are used for the purpose of disinfecting drinking water and service water as well as for photochemical degradation of chloramines in swimming pool water. Dulcodes R UV systems are particularly suitable for water which tends to form deposits on the protection tubes. These deposits can be easily removed with the manual wiper mechanism even at full operating pressure without the need to interrupt operation.

Thanks to the Opti-Flux high-performance UV lamps with a power output of 300 W, maximum flow rates are achieved with a minimum number of lamps. With the long lamp life time of the UV lamps of up to 14,000 operating hours, compared to conventional systems, lamps need to be replaced less frequently thus reducing costs.

Depending on the water transmission rate and the required radiation level, the system can be used at volumetric flow rates of up to 438 m^3/h.

Features

- Flow: up to 438 m^3/h (depending on transmission rate)
- Auto-adjusting wiper elements made from food-grade PTFE
- Cleaning possible without interrupting operations: the manual wiper is easy to use even under maximum system operating pressure. Thanks to their self-sharpening function, the wiper elements provide maximum cleaning effect combined with a long service life
- High-efficiency, low pressure Opti-Flux lamp with special amalgam technology, increased UV output, largely independent of temperature
- Lamp service life: up to 14,000 h
- Increased output with fewer lamps: lamp power output of 300 W enables a higher rate per lamp, longer service intervals and lower operating costs
- Electronic ballast units with BUS interface for ignition and monitoring of each individual lamp
- Variable lamp current and thus gentle ignition and precise adaptation of optimum lamp operation
- Factory-calibrated UV-C-sensitive sensor
- Large graphic display to show sensor signal and operating messages in plain text
- Freely-programmable control, for instance for various different rinsing, warning and switching processes
- Radiation chambers made from high-grade stainless steel 1.4404, hydraulically optimised by means of computer simulation
- Control cabinets made from coated steel

Main applications

Drinking water	Industrial water	Swimming pool water	Waste water	Saltwater
✔	✔	✔	—	—

Technical Data

Type	Max. flow	Lamp power	Connected load	Radiation chamber length	Minimum clearance for maintenance work	Ø	Empty weight/ Operating weight	Connection nominal diameter
	m^3/h	W	W	mm	mm	mm	kg	
1x300R	30.0*	1x300	320	1,562	1,438	140	45/67	DN 80
2x300R	95.0*	2x300	650	1,633	1,438	220	75/134	DN 150
3x300R	179.0*	3x300	1,000	1,638	1,438	273	90/182	DN 200
4x300R	274.0*	4x300	1,300	1,652	1,438	330	120/253	DN 250

* * 98 %/cm transmission; 400 J/m^2 UV dose

Lamp type	Opti-Flux low-pressure UV lamp (see Section 1.3.1)
Controller type	De luxe controller (see Chap. 1.3.1)
Permissible operating pressure	10 bar
Permissible ambient temperature	5–40 °C
Permissible water temperature	5–70 °C

1 Dulcodes UV systems

Spare parts for Dulcodes R UV systems

	Order no.
Opti-Flux UV lamp 300 W	1020929
Lamp protection tube for Dulcodes R	1020846
O-ring lamp protection tube/lamp cover	1023569
Wiper element (2 required per UV lamp)	1027879
UVC-U sensor P/D/W/R 1.4539 from Sep. 2006	1028115
Lamp cable, 3.5 m long	1017867
Lamp cable, 7.5 m long	1024826
Sensor cable, 5 m long	1021041
Extension for sensor cable, 5 m long	1024825
O-ring for screw plug G 1/4"	792872
Replacement filter mat for control cabinet ventilation (2 pcs. required per control cabinet)	1004212

1 Dulcodes UV systems

1.10 Dulcodes W UV Systems

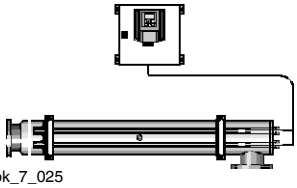

pk_7_025

Dulcodes W UV systems with High-Flux lamps are used for irradiation of a very wide range of water types and – depending on transmission – can be used with flows up to 600 m^3/h.

Features

- Flow: up to 600 m^3/h (depending on transmission)
- High-efficiency low pressure High-Flux lamp with special amalgam technology, increased UV output, largely independent of temperature
- Lamp life time: approx. 10,000 h
- Ballasts with BUS interface for ignition and monitoring of each individual lamp
- Variable lamp current, hence lamp-friendly ignition process and precise adjustment of the optimum lamp operating current
- Long-term stable UV-C sensor for monitoring the disinfection capability and transmission (UV transmission factor) of the water, factory-calibrated
- Large graphical display for display of the sensor signal
- Monitoring of lamp ageing, lamp sleeve fouling and changes in water quality
- Freely programmable controller, e.g. for different flushing, warning and shutdown procedures
- Radiation chambers made from high-grade stainless steel 1.4571 or 1.4404
- Control cabinets made from coated steel

Main applications

Drinking water	Industrial water	Swimming pool water	Wastewater	Salt water
✔	✔	✔	—	—

Technical Data

Type	Max. flow	Lamp power	Connected load	Radiation chamber length	Minimum clearance for maintenance work	Ø	Empty weight/ Operating weight	Connection nominal diameter
	m^3/h	W	W	mm	mm	mm	kg	
1x75W**	5.7*	75	90	1,115	910	140	12/27	G 1 1/4"
1x80W**	5.4*	80	100	630	600	114	8/14	G 1 1/4"
1x130W	8.7*	130	150	940	900	114	10/20	G 2
1x230W	20.0*	230	250	1,468	1,400	140	24/46	DN 65
2x230W	64.0*	2x230	500	1,640	1,500	220	41/96	DN 125
3x230W	117.0*	3x230	750	1,665	1,500	273	53/138	DN 150
4x230W	184.0*	4x230	1,000	1,690	1,600	324	65/150	DN 200
5x230W	228.0*	5x230	1,200	1,690	1,600	324	70/190	DN 200
6x230W	273.0*	6x230	1,400	1,790	1,600	406	75/200	DN 250
7x230W	369.0*	7x230	1,700	1,920	1,600	406	115/310	DN 250
8x230W	418.0*	8x230	1,900	1,920	1,600	406	115/310	DN 250
9x230W	467.0*	9x230	2,100	1,920	1,600	406	130/320	DN 250
10x230W	514.0*	10x230	2,400	1,920	1,600	406	130/320	DN 250
11x230W	561.0*	11x230	2,600	1,920	1,600	406	130/320	DN 250
12x230W	600.0*	12x230	2,800	1,920	1,600	406	130/320	DN 250

* 98 %/cm transmission; 400 J/m^2 UV dose

Lamp type	High-Flux low pressure lamp (see Chap. 1.3.1)
Controller type	De luxe controller (see Chap. 1.3.1)
Permissible operating pressure	10 bar
Permissible ambient temperature	5–40 °C
Permissible water temperature	5-70 °C **5-30 °C

1 Dulcodes UV systems

Spare Parts For Dulcodes W UV Systems

	Order no.
OptiFlux UV lamp 75 W	1020911
High-Flux UV lamp 80 W	1002485
High-Flux UV lamp 130 W	1002486
High-Flux UV lamp 230 W	1002487
Lamp protection tube for Dulcodes 75 W	1020845
Lamp protection tube für Dulcodes 80 W	1002467
Lamp protection tube für Dulcodes 130 W	1002468
Lamp protection tube for Dulcodes 230 W	1002469
Lamp protection tube für Dulcodes 2-5x230 W	1002470
Lamp protection tube für Dulcodes 6-12x230 W	1002471
O-ring lamp protection tube/lamp cover	1004920
UVC-U sensor P/D/W/R 1.4539 from Sep. 2006	1028115
O-ring UVC sensor	1002175
Sensor cable, 5 m long	1004412
Screwed plug G 1/4"	1002752
O-ring for G 1/4" screwed plug	741256
Replacement filter mat for control cabinet ventilation (2 pcs. required per control cabinet)	1004212
Hook spanner (special tool required for lamp replacement)	1002764

1 Dulcodes UV systems

1.11 Dulcodes M UV Systems With Powerline Medium Pressure Lamps

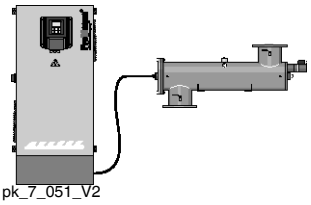
pk_7_051_V2

Dulcodes M UV systems with Powerline medium pressure lamps are used for treatment of large water quantities and – depending on transmission – can be used with flows up to 800 m^3/h. Their special lamp makes these systems particularly suitable for photochemical reduction of chloramine in swimming pool water, chlorine dioxide in the beverages industry, or chlorine and ozone in other applications.

Features

- Flow: up to 800 m^3/h (depending on transmission)
- Powerline type medium pressure lamp with a mercury vapour pressure above 1 bar, hence high connected loads of up to 10 kW per metre of arc length
- High gas pressure and relatively high lamp operating temperature of 600 to 800 °C, hence broad emission spectrum
- Particularly suitable for chemical photochemical reduction of chloramine in swimming pool water, chlorine dioxide in the beverages industry, or chlorine and ozone in other production water, for example, due to the broad emission spectrum of the lamps
- Lamp life time: approx. 10,000 h
- Ballasts with BUS interface for ignition and monitoring of the lamp
- Variable lamp current, hence lamp-friendly ignition process and precise adjustment of the optimum lamp operating current
- Long-term stable UV-C sensor for monitoring the disinfection performance and UV transmission of the water
- Large graphical display for monitoring the sensor signal with trend line
- Monitoring of lamp ageing, lamp sleeve fouling and changes in water quality
- External power control via 0/4-20 mA signal for optimum adjustment of the system to changing operating conditions such as flow fluctuations, for example (as from Dulcodes 4ML)
- Automatic adjustment of lamp power to a defined UV-C sensor signal saves energy and extends lamp life time (as from Dulcodes 4ML)
- Automatic motorised wiper for efficient removal of deposits on the lamp protection tube
- Freely programmable controller, e.g. for different flushing, warning and shutdown procedures
- Radiation chambers made from high-grade stainless steel 1.4571 or 1.4404
- Control cabinets made from coated steel

Main applications

Drinking water	Industrial water	Swimming pool water	Wastewater	Salt water
✔	✔	✔	—	—

Technical Data

Type	Max. flow	Lamp power	Connected load	Radiation chamber length	Minimum clearance for maintenance work	Ø	Empty weight/ Operating weight	Connection nominal diameter
	m^3/h	kW	kW	mm	mm	mm	kg	
1x2ML	88.0*	2	2.3	850	1,750	220	146	DN 100
1x3ML	158.0*	3	3.2	850	1,750	220	156	DN 150
1x4ML	229.0*	4	4.2	1,200	2,450	270	190	DN 200
1x6ML	406.0*	6	6.2	1,200	2,450	320	230	DN 250
1x8ML	541.0*	8	8.2	1,500	3,050	320	240	DN 250
1x10ML	600.0*	10	10.2	1,500	3,050	320	240	DN 250
1x10ML	800.0*	10	10.2	1,500	3,050	400	283	DN 300

* 98 %/cm transmission; 600 J/m^2 UV dose

Lamp type	Powerline medium pressure lamp (see Chap. 1.3.1)
Controller type	Powerline de luxe controller (see Chap. 1.3.1)
Permissible operating pressure	10 bar
Permissible ambient temperature	5–40 °C
Permissible water temperature	5–40 °C

1 Dulcodes UV systems

Spare Parts For Dulcodes M UV Systems

	Order no.
Powerline UV lamp 3 kW	1009385
Powerline UV lamp 4 kW	1009386
Powerline UV lamp 6 kW	1009387
Powerline UV lamp 8 / 10 kW	1009388
Lamp protection tube for Dulcodes 2 ML / 3 ML	1009214
Lamp protection tube for Dulcodes 4/6 ML	1009215
Lamp protection tube for Dulcodes 8/10 ML	1009216
O-ring lamp protection tube/lamp cover	1027553
UVC sensor M 1.4539	1025685
UVC-U sensor M 1.4539	1034147
O-ring UVC sensor	1002175
Sensor cable, 5 m long	1009398
Replacement filter mat for control cabinet ventilation (2 No. required per control cabinet)	791038

1 Dulcodes UV systems

1.12 Accessories For Dulcodes UV Systems

Transmission Photometer TMX 02

Photometer for measurement of the UV transmission at 254 nm in accordance with DIN 38404.

Supplied in sturdy aluminium case complete with 40 mm quartz cuvette, 4 x NiMH rechargeable batteries and charger.

Technical Data

Dimensions L x W x H (mm)	370 x 330 x 150
Weight	3.0 kg
Voltage supply	4 x 1,500 mAh NiMH batteries
UV-C lamp	Mercury medium pressure lamp
Measurement resolution	Transmission in 0.1 %
Measurement accuracy	Transmission in ± 0.5 %

	Order no.
Transmission Photometer TMX 02	1027956

Reference radiometer RRM

Reference radiometer for checking and recalibrating DVGW-certified Dulcodes Z UV systems. The portable instrument complies with DVGW technical standard W 294/Part 3/2003 and is fitted with an insertion sensor which is inserted directly in the radiation chamber of the Dulcodes Z UV system in place of the sensor to be calibrated, so that the radiation intensity can be measured without interrupting operation. Suitable UV protective glasses must be worn as UV radiation escapes from the radiation chamber during this procedure.

Technical Data

Measurement range	20/200/2,000/20,000 W/m^2 (switchable)
Display	3-digit
Voltage supply	Battery, 9 V Type 6F22 or equivalent
Wavelength range	220 ... 290 nm, spectral adjustment in accordance with W 294
Angular field of view	40° in accordance with W 294, Item 7.2

	Order no.
Reference radiometer RRM	1025094

UV protective glasses

Protective glasses to protect against harmful to the eye UV radiation when working on open UV systems.

	Order no.
UV protective glasses	1025243

Protective gloves

Protective gloves made from white cotton to avoid fingerprints on UV lamps and lamp sleeves. 1 pair in universal size.

	Order no.
Protective gloves	1032815

1 Dulcodes UV systems

Sampling cock

Fireproof sampling cock made from stainless steel.

	Order no.
Sampling cock	on request

Cleaning system

Cleaning system for flushing the radiation chamber with a cleaning solution to remove deposits on the lamp tubes and internal surfaces of the UV system. Consists of chemical tanks, booster and dosing pumps, valves and complete automatic or manual controller. Design and technical equipment are matched to the particular UV system and its application.

	Order no.
Cleaning system	on request

Clip-on thermostat

A thermostat is fitted to the outside of the radiation chamber. It monitors the temperature of the water and can be connected to the control. The flushing valve opens when the preset limit temperature is exceeded.

	Order no.
Clip-on thermostat	on request

2 OZONFILT® And Bono Zon® Ozone Plants

Contents **Page**

2.1 Ozone In Water Treatment 1

2.2 Performance Overview Of Ozone Plants 2

2.3 Questionnaire On The Design Of An Ozone Plant 3

2.4 OZONFILT® OZVa 4

2.4.1 OZONFILT® Ozone Production Plants OZVa 1-4 (Operating Gas - Air) 5

2.4.2 OZONFILT® OZVa 5-7 (Operating Gas - Oxygen) 7

2.4.3 Ordering Information For OZONFILT® OZVa Plants 9

2.4.4 OZONFILT® Compact OMVa 11

2.5 OZONFILT® OZMa 12

2.5.1 OZONFILT® Ozone Generation Plants OZMa 1-6 A (Operating Gas - Air) 13

2.5.2 OZONFILT® Ozone Generation Plants OZMa 1-6 O (Operating Gas - Oxygen) 16

2.5.3 Order Information For OZONFILT® OZMa Plants 19

2.6 Bono Zon® Ozone Plants 20

2.6.1 Bono Zon® Ozone Plant With Ozone Generator Made Of Stainless Steel 22

2.7 Accessories For Ozone Plants 23

2.7.1 Compressors For OZONFILT® OZVa 1-4 23

2.7.2 Oxygen Generator For OZONFILT® OZVa 5-7 24

2.7.3 Static Helical Mixer Made From PVC Or Stainless Steel 25

2.7.4 Accessories For Bono Zon® Ozone Plants 26

2.7.5 Residual Ozone Gas Destructor 27

2.7.6 Room Air Monitoring 28

2.7.7 Personal Protection Needs 29

2 OZONFILT® And Bono Zon® Ozone Plants

2.1 Ozone In Water Treatment

As the most powerful oxidant that can be used in water treatment, ozone enables a broad spectrum of possible applications:

Outstanding disinfection action against

- Bacteria and viruses
- Fungi and parasites

Oxidation of undesirable inorganic substances in the water

- Iron and manganese
- Arsen
- Nitrite and sulfide

Oxidation of undesirable organic substances in the water

- Strong-smelling and strong-tasting compounds
- Humic substances and other compounds which affect the colour of the water
- Cyclic hydrocarbons
- Trihalomethanes, chloramines and other chlorine compounds

Microflocculating action

- After oxidation with ozone, substances and colloids dissolved in the water become insoluble and can be filtered

Significantly less environmentally-harmful by-products occur in the production and use of ozone, than with other comparable oxidants and disinfectants. As a highly reactive gas, ozone is produced on site, and introduced to the water directly, without interim storage. Because of its high reactivity, ozone decomposes into oxygen again in the water, with a half-life of several minutes. All components of an ozone handling system must be perfectly matched with each other and with the planned application, to achieve an optimum relationship between ozone production and effect.

For every new project, our engineers can draw on the experience that we have continually accumulated since 1971, in the following applications:

Drinking water supply

- Oxidation of iron, manganese or arsenic
- Improvement in appearance and taste
- Disinfection

Food and beverage industry

- Disinfection of mineral water
- Disinfection at the rinser in the beverage industry
- Disinfection of production water

Swimming pools

- Reduction of chloramines and trihalomethanes, so avoiding typical swimming pool smell
- Crystal-clear water thanks to microflocculating action
- Reliable microbiological barriers in therapy pools
- Reduction of investment and operating costs through the possibility of reducing the circulating power and throttling the fresh water inlet

Industry

- Cooling water treatment
- Combating legionella in cooling water circuits
- Disinfection of process water
- Removal of odorous substances in air scrubbers

2 OZONFILT® And Bono Zon® Ozone Plants

2.2 Performance Overview Of Ozone Plants

ProMaqua® ozone plants function according to the proven principle of dielectric barrier discharge. By applying a high voltage of several thousands of Volts, ozone is produced from oxygen between two electrodes separated by an insulating dielectric. Depending on the plant type, either dried ambient air or concentrated oxygen is used as oxygen source. ProMaqua® ozone plants are optimised to ensure maximum profitability and operating safety. They meet the German standard for ozone generation plants DIN 19627 and are characterised by low energy and cooling water consumption.

Medium frequency pressure systems

In case of the series OZONFILT® OZVa and OZMa, the operating gas air or oxygen is fed to the ozone generator under pressure. Ozone is generated using medium-frequency high voltages.

The use of an integrated variable pressure swing dryer and of a dielectric with optimum thermal conductivity results in an extraordinarily compact design of the plant.

Thanks to operation under pressure, the generated ozone can be directly fed to water systems with a backpressure of up to 2 bar. Additional pressure-increasing pumps and injectors thus become superfluous in many applications.

Vacuum systems

In case of the series Bono Zon® BONa, the operating gas air is suctioned through the air drying and the ozone generator with the help of a pressure-increasing pump and an injector system. The ozone itself is generated under mains frequency and is controlled by changing the high voltage. The vacuum operation ensures a very safe operation.

ProMaqua® offers numerous ozone plants for diverse applications. The overview below shows the capacity ranges of our type series:

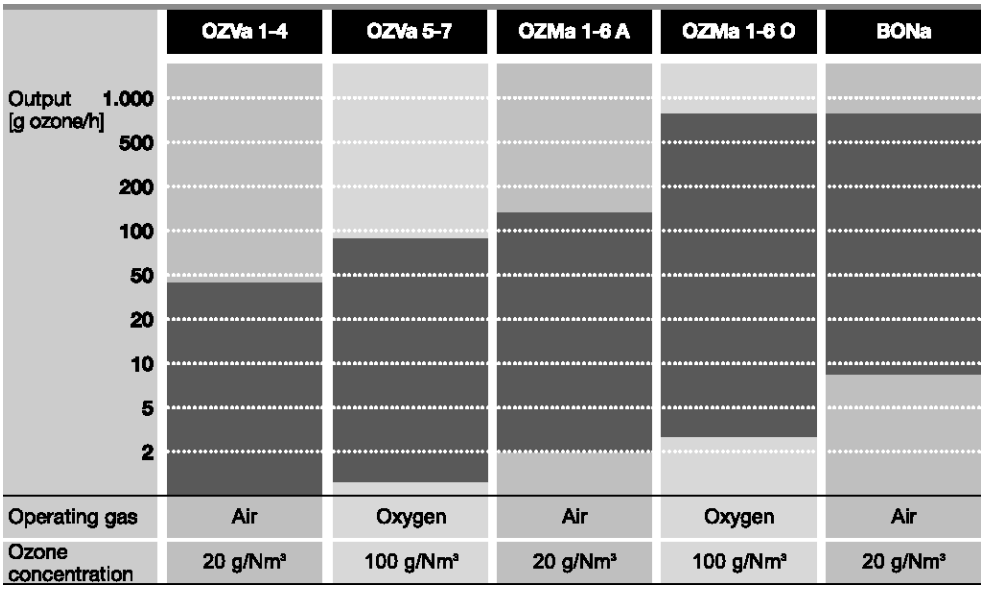

P_PMA_OF_0028_SW

larger systems available on request

ProMaqua provides all the advice needed for the safe operation of an ozone plant:

- Evaluation of the situation on site by trained, expert field sales staff.
- In our water laboratory, we can measure all of the key water parameters required for an optimum plant design.
- Planning of the plant.
- Commissioning and plant service by our trained service technicians.

2.3 Questionnaire On The Design Of An Ozone Plant

Use of the ozone system:

☐ for treatment of
- ☐ Drinking water
- ☐ Product water in the food and beverages industry, cosmetics or pharmaceutical industry
- ☐ Industrial water
- ☐ Cooling water
- ☐ Swimming pool water
- ☐ Zoo
- ☐ _____

☐ for oxidation of
- ☐ Iron, manganese, nitrite, sulphide etc.
- ☐ Organic matter
- ☐ Discolouration
- ☐ _____

☐ _____

Water values:

Max. water flow rate	_____ m^3/h	Maximum water pressure	_____ bar
Water flow rate	☐ constant	☐ fluctuating from _____ m^3/h to _____	m^3/h
pH value	_____	Iron (Fe^{2+})	_____ mg/l
Temperature	_____ °C	Manganese (Mn^{2+})	_____ mg/l
Solid fraction	_____ mg/l	Nitrite (NO_2^-)	_____ mg/l
		Sulphide (S^{2-})	_____ mg/l
		TOC (total organic carbon)	_____ mg/l

Response time to application:

_____ m^3 volume reaction tank or _____ minutes residence time in entire system.

Type of metering:

☐ constant

☐ flow-proportional

☐ depending on measured value

Desired amount of metering: _____ mg/l

Other requirements:

_____

_____

_____

P_PMA_OF_0009_SW

2 OZONFILT® And Bono Zon® Ozone Plants

2.4 OZONFILT® OZVa

Ozone plants of the OZONFILT®OZVa range have been designed as pressurised plants, in which the operating gas – air or oxygen – is fed into the ozone generator under pressure. The ozone is generated using medium-frequency high voltage and is primary current controlled. The introduction of PCC (primary current controlled) technology, specially developed in-house by ProMaqua, provides complete protection for the electrical components (high-voltage transformer and power stage) and also permits the correct digital display of the ozone feed rate in “grams/hour”. As a result, any required ozone volume between 3 and 100 % of the nominal capacity can be set reproducibly, and largely independently of voltage and pressure fluctuations.

The use of an integrated pressure swing dryer and a dielectric with optimum thermal conductivity makes the plant extremely compact. The unique design of the generator ensures outstanding cooling performance with low cooling water consumption and removes the heat produced quickly before the ozone produced can decompose due to excessive heat.

Operation under pressure means that the ozone generated can be introduced directly into water systems with back pressures of up to 2 bar. Additional booster pumps and injectors can therefore be dispensed with in many applications.

Combined with DULCOMETER® measuring and control technology and DULCOTEST®OZE ozone sensors, these systems are especially suitable for use where the operation is dependent on, and is controlled, by the measured data.

Features

- Simple operation
- Fully equipped
- High efficiency
- Low consumption of energy and cooling water
- High ozone concentration thanks to operation with oxygen
- PCC technology ensures complete protection of electrical components
- Correct digital display of ozone output in g/h
- Reproducible setting of the desired ozone quantity between 3 and 100 % of nominal capacity

2 OZONFILT® And Bono Zon® Ozone Plants

2.4.1 OZONFILT® Ozone Production Plants OZVa 1-4 (Operating Gas - Air)

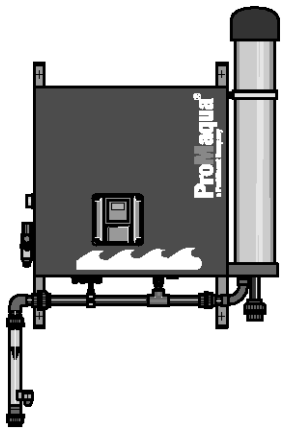

pk_7_001_1_V2
OZONFILT® OZVa 1; capacity: 5 g/h

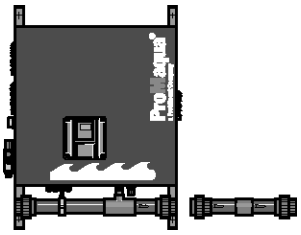

pk_7_042_V2
OZONFILT® OZVa 2; capacity: 15 g/h

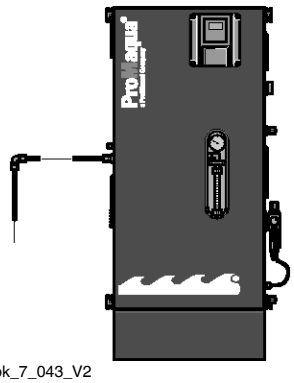

pk_7_043_V2
OZONFILT® OZVa 3; capacity: 35 g/h

Under nominal conditions, the OZVa 1-4 range produces up to 40 g/h of ozone from oxygen in the surrounding air at a concentration of 20 g/Nm^3. Using the designated mixing devices, ozone concentrations between 3 and 12 ppm can be achieved in the water to be treated, depending on the temperature (theoretical value at 30 or 0 °C).

Types OZVa 1 and 2 are installed in a control cabinet for wall mounting; types OZVa 3 and 4 are installed in a free-standing cabinet.

An adequate supply of compressed air and a mixing device designed for the operating conditions must be provided for the operation of the ozone plant.

Compressed air requirements

- Oil- and dust-free, non-corrosive
- Constant upstream pressure of 6 - 10 bar
- Required air quantities:
  OZVa 1: 7 l/min
  OZVa 2: 20 l/min
  OZVa 3: 40 l/min
  OZVa 4 : 45 l/min

Mixing device

OZVa 1 can be ordered in the following versions:

- Transparent mixing system with flow monitor mounted at the side of the plant (see fig. pk_7_001_1_V2)
- Static helical mixer mounted directly below the plant, made of PVC, with 4 helical blades (pressure drop approx. 0.4 bar at maximum throughput) (see fig. pk_7_042_V2)
- Without mixing system for connection of 12/10 mm stainless steel pipes or 12/9 mm PTFE pipes

OZVa 2 can be ordered in the following versions:

- Static helical mixer mounted directly below the plant, made of PVC, with 4 helical blades (pressure drop approx. 0.4 bar at maximum throughput) (see fig. pk_7_042_V2)
- Without mixing system for connection of 12/10 mm stainless steel pipes or 12/9 mm PTFE pipes

OZVa 3 and 4 are in principle delivered as versions without mixing system; a suitable mixing system must be ordered separately (see Fig. pk_07_043_V2, see Chap. 2.3.5).

Notes

- The length of ozone gas transporting pipes and the number of joints should be kept to a minimum. All rooms with a removable joint are to be monitored with a gas detector according to the valid German accident prevention regulations. All OZONFILT® plants are equipped for fitting a gas detector such as e.g. type GMA 36 Ozon (see Accessories).
- For all installations the ozone generator must be interlocked with the water flow into the metering point.
- To prevent any return of ozonised water into the ozone-transporting pipe, a non-return valve is to be installed upstream of the OVZa.

2 OZONFILT® And Bono Zon® Ozone Plants

Technical Data

OZONFILT® Ozone Production Plants OZVa 1-4 (Operating Gas - Air)

Environmental parameters

max. humidity of the surrounding air 85 %, non-condensing, non-corrosive, dust-free, max. ambient temperature: 40 °C

		OZVa 1	OZVa 2	OZVa 3	OZVa 4
Number of generator modules		1	1	2	2
Ozone capacity, measured in accordance with DIN with air at 20 °C, cooling water at 15 °C	g/h	5	15	35	40
Air consumption	Nm^3/h	0.37	1.00	2.25	2.50
Ozone concentration in the gas phase referenced to nominal conditions	g/Nm^3 *	20	20	20	20
Specific energy requirement at nominal capacity	Wh/g	30	30	21	20
Power factor at full capacity	cos ϕ	0.70	0.98	0.98	0.98
Ozone connection		integrated in mixing device or G 1/4" internal	integrated in mixing device or G 1/4" internal	G 1/4" internal	G 1/4" internal

* with air at 20 °C, cooling water at 15 °C

** $Nm^3 = m^3$ under standard conditions (p = 1.013×10^5 Pa, T = 273 K)

Electrical connection

		OZVa 1	OZVa 2	OZVa 3	OZVa 4
Connected load	V/Hz/A	230/50;60/1,2	230/50;60/3	230/50;60/6	230/50;60/6
Enclosure rating		IP 43	IP 43	IP 43	IP 43

Overall dimensions (without mixing)

		OZVa 1	OZVa 2	OZVa 3	OZVa 4
Width	mm	840	840	710	710
Height	mm	840	805	1,400	1,400
Depth	mm	310	310	310	310

Weight

		OZVa 1	OZVa 2	OZVa 3	OZVa 4
Weight	kg	70	75	121	121

Ozone mixing

		OZVa 1	OZVa 2	OZVa 3	OZVa 4
Raw water temperature max.	°C	35	35	35	35
Permissible pressure at ozone outlet	bar	0.8–2.0	0.8–2.0	0.8–2.0	0.8–1.5

Air supply

		OZVa 1	OZVa 2	OZVa 3	OZVa 4
Required air quantity	l/min	7	20	40	45

Air quality oil and dust-free, non-corrosive, Constant upstream pressure of 6-10 bar

Cooling water

		OZVa 1	OZVa 2	OZVa 3	OZVa 4
Cooling water requirement	l/h	10–60	20–60	50–100	70–100
Cooling water inlet pressure	bar	1–5	1–5	1–5	1–5
Cooling water inlet, PE pressure hose	mm	6 x 4	6 x 4	6 x 4	6 x 4
Cooling water outlet, open discharge	mm	6 x 4	6 x 4	6 x 4	6 x 4
Cooling water temperature at ambient temp. max. 35 °C	°C	<30	<30	<30	<30
Cooling water temperature at ambient temp. 35–40 °C	°C	<25	<25	<25	<25

Cooling water quality No tendency to form lime scale; Removable substances: < 0.1 ml/l ; Iron: < 0.2 mg/l; Manganese: < 0.05 mg/l; no corrosive components; Conductivity: > 100 µS/cm

2.4.2 OZONFILT® OZVa 5-7 (Operating Gas - Oxygen)

The OZONFILT® OZVa 5-7 range is a new development based on proven PSG technology which enables ozone concentrations of up to 150 g/Nm³ through the use of oxygen as operating gas. Using the designated mixing devices, ozone concentrations in the water to be treated of up to 90 ppm can be achieved (theoretical value at 0 °C).

Depending on the plant type, ozone is produced in 1-3 generators from oxygen provided from special oxygen generators or bottles. The rated output of the individual generators is 30 g/h at 100 g/Nm³.

Type 5 is installed in a wall cabinet corresponding to OZVa 2; the types 6 and 7 are installed in a free-standing cabinet corresponding to OZVa 4. In all three plants, the ozone is transported to the mixing device through a separate 12/10 mm stainless steel pipe or 12/9 mm PTFE pipe.

Operating gas specification

- Oxygen
- Concentration: > 90 vol%
- Dew point: < -50 °C
- Pressure: 3-6 bar

Mixing device

Because of the high ozone concentrations, we recommend mixing systems made of stainless steel. Mixing systems made of PVC may show a reduced service life, depending on the operating conditions.

Notes

- The length of ozone gas transporting pipes and the number of joints should be kept to a minimum. All rooms with a joint are to be monitored with a gas detector according to the valid German accident prevention regulations. All OZONFILT® plants are equipped for fitting a gas detector such as e.g. type GMA 36 Ozon (see Accessories).
- Depending on the operating and installation conditions, it might be necessary to also monitor the room air for excessive oxygen content. For this purpose, the gas detector GMA 36 Oxygen can be used.
- For all installations the ozone generator must be interlocked with the water flow into the metering point.
- To prevent any return of ozonised water into the ozone-transporting pipe, a non-return valve is to be installed upstream of the OVZa.
- All gas-transporting accessories must be resistant to ozone and oxygen (e.g. fat-free).
- Because of the high ozone concentrations, only catalytic residual ozone destructors can be used. Residual ozone destructors on the basis of active carbon ignite spontaneously if subjected to increased ozone concentrations.

2 OZONFILT® And Bono Zon® Ozone Plants

Technical Data

OZONFILT® OZVa 5-7 (Operating Gas - Oxygen)

		OZVa 5	OZVa 6	OZVa 7
Number of generator modules		1	2	3
Nominal ozone capacity at 100 g/Nm³ ** and cooling water at 15 °C	g/h	30	60	90
Ozone capacity at 150 g/Nm³ *	g/h	17.5	35.0	52.0
Ozone capacity at 80 g/Nm³	g/h	35	70	105
Specific energy requirement at nominal capacity	Wh/g	10	10	10
Power factor at full capacity	cos ϕ	0.98	0.98	0.98
Ozone connection		G 1/4" internal	G 1/4" internal	G 1/4" internal

Electrical connection

		OZVa 5	OZVa 6	OZVa 7
Connected load	V/Hz/A	230/50;60/3	230/50;60/6	230/50;60/10
Enclosure rating		IP 43	IP 43	IP 43

Overall dimensions (without mixing)

		OZVa 5	OZVa 6	OZVa 7
Width	mm	865	705	705
Height	mm	804	1,400	1,400
Depth	mm	310	345	345

Weight

		OZVa 5	OZVa 6	OZVa 7
Weight	kg	75	109	114

Ozone mixing

		OZVa 5	OZVa 6	OZVa 7
Raw water temperature max.	°C	35	35	35
Permissible pressure at ozone outlet	bar	0.8–2.0	0.8–2.0	0.8–2.0

Specification of operating gas: oxygen

		OZVa 5	OZVa 6	OZVa 7
Gas volume at nominal capacity 100 g/Nm³	Nl/h	300	600	900
Gas volume at capacity 150 g/Nm³	Nl/h	117*	234*	347*
Gas volume at capacity 80 g/Nm³	Nl/h	438	875	1,313
Concentration min.	vol%	90	90	90
Dew point max.	°C	-50	-50	-50
Pressure	bar	3 – 6	3 – 6	3 – 6
Particles max.	µm	5	5	5
Hydrocarbons max.	ppm	20	20	20
Max. temperature	°C	30	30	30

Cooling water

		OZVa 5	OZVa 6	OZVa 7
Cooling water requirement	l/h	30	70	100
Cooling water inlet pressure	bar	1–5	1–5	1–5
Cooling water inlet, PE pressure hose	mm	6 x 4	6 x 4	6 x 4
Cooling water outlet, open discharge	mm	6 x 4	6 x 4	6 x 4
Cooling water temperature at ambient temp. max. 35 °C	°C	<30	<30	<30
Cooling water temperature at ambient temp. 35–40 °C	°C	<25	<25	<25

Cooling water quality No tendency to form lime scale. ; Removable substances: < 0.1 ml/l; Iron: < 0.2 mg/l; Manganese: < 0.05 mg/l; no corrosive components; Conductivity: > 100 µS/cm

* Capacity 150 g/Nm³ must be factory set as a special version

** Nm³ = m³ under standard conditions (p = 1.013x10^5 Pa, T = 273 K)

2 OZONFILT® And Bono Zon® Ozone Plants

2.4.3 Ordering Information For OZONFILT® OZVa Plants

OZONFILT® OZVa 1 capacity 5 g/h

Type	Control cabinet connection	Order no.
without mixing system	blue painted	1004239
without mixing system	stainless steel	1026124
with transparent mixing system with flow monitoring 0.5–3 m³/h	blue painted	1026118
with transparent mixing system with flow monitoring 0.5–3 m³/h	stainless steel	1026125
with transparent mixing system with flow monitor, 3-5 m³/h	blue painted	1004235
with transparent mixing system with flow monitor, 3-5 m³/h	stainless steel	1026126
with static mixer PVC, DN 40, 5–10 m³/h	blue painted	1026120
with static mixer PVC, DN 40, 5–10 m³/h	stainless steel	1026127
with static mixer PVC, DN 50, 10–15 m³/h	blue painted	1026121
with static mixer PVC, DN 50, 10–15 m³/h	stainless steel	1026128
with static mixer PVC, DN 32, 0.5–2.8 m³/h	blue painted	1026122
with static mixer PVC, DN 32, 0.5–2.8 m³/h	stainless steel	1026129
with static mixer PVC, DN 32, 2.8–5 m³/h	blue painted	1026123
with static mixer PVC, DN 32, 2.8–5 m³/h	stainless steel	1026130

OZONFILT® OZVa 2 capacity 15 g/h

Type	Control cabinet connection	Order no.
without mixing system	blue painted	1005129
without mixing system	stainless steel	1026133
with static mixer PVC, DN 40, 5–10 m³/h	blue painted	1005127
with static mixer PVC, DN 40, 5–10 m³/h	stainless steel	1026134
with static mixer PVC, DN 50, 10–15 m³/h	blue painted	1005806
with static mixer PVC, DN 50, 10–15 m³/h	stainless steel	1026135
with static mixer PVC, DN 32, 0.5–2.8 m³/h	blue painted	1026132
with static mixer PVC, DN 32, 0.5–2.8 m³/h	stainless steel	1026144
with static mixer PVC, DN 32, 2.8–5 m³/h	blue painted	1005125
with static mixer PVC, DN 32, 2.8–5 m³/h	stainless steel	1026145

OZONFILT® OZVa 3 capacity 35 g/h

Type	Control cabinet connection	Order no.
without mixing system	blue painted	1009083
without mixing system	stainless steel	1026146

OZONFILT® OZVa 4 capacity 40 g/h

Type	Control cabinet connection	Order no.
without mixing system	blue painted	1009105
without mixing system	stainless steel	1026147

2 OZONFILT® And Bono Zon® Ozone Plants

OZONFILT® OZVa 5 capacity 30 g/h operating gas oxygen

Type	Control cabinet connection	Order no.
without mixing system	blue painted	1026148
without mixing system	stainless steel	1026149

OZONFILT® OZVa 6 capacity 60 g/h operating gas oxygen

Type	Control cabinet connection	Order no.
without mixing system	blue painted	1023452
without mixing system	stainless steel	1026150

OZONFILT® OZVa 7 capacity 90 g/h operating gas oxygen

Type	Control cabinet connection	Order no.
without mixing system	blue painted	1026151
without mixing system	stainless steel	1026152

2 OZONFILT® And Bono Zon® Ozone Plants

2.4.4 OZONFILT® Compact OMVa

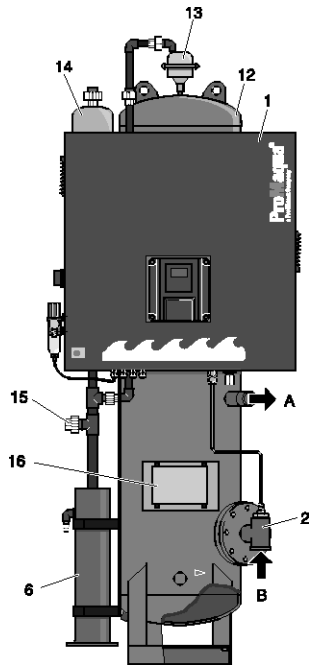

pk_7_024_V2

A to filtration
B Raw water

The OZONFILT® Compact OMVa is a complete, fully-assembled, ready for use ozone stage for treatment of drinking water, service water or swimming pool water in the capacity range from 5...40 g ozone/h, and consists of the following modules:

Ozone generation module (1), built in accordance with DIN 19627:

The ozone is produced with an OZONFILT® OZVa in a pressure-resistant ozone generator using an electronically produced and controlled medium-frequency voltage.

Ozone mixing module (2):

This module consists of an ozone dosing point and a downstream mixing section made from stainless steel, with a series of static mixing elements for intensive mixing of the ozone/air mix with the water to be treated. The pipelines carrying the ozone, and the pipeline from the raw water connection to the entry to the reaction tank are fabricated totally in stainless steel and have been factory pressure tested.

With back pressures up to max. 1.8 bar, no injector is required to suck out the ozone, as the ozone production takes place at positive pressure.

Reaction tank module (12):

The stainless steel reaction tank incorporates all necessary fitments for water distribution and an automatic vent valve (13) The ozone generation module (1), the residual ozone gas destructor (14) and room air monitoring (16) are mounted on this tank (12).

Residual ozone gas destruction module (14):

The residual ozone gas destruction (14) incorporates an integrated water separator, (6) to remove traces of ozone gas in the exhaust air coming from the reaction tank (12). A connection is also available for the exhaust air from any downstream filter plant (15) that may be fitted.

Room air monitoring module (16):

The room air is monitored for traces of ozone gas by a calibrated gas warning device with an electrochemical sensor with good long-term stability.

If the alarm threshold is exceeded, ozone production is stopped and an alarm signalled. A buzzer is activated at the same time.

Technical Data

Type		OMVa 1	OMVa 2	OMVa 3
Ozone system type		OZVa 1	OZVa 2	OZVa 3
Ozone capacity	g/h	5	15	35
Reaction tank volume	l	205	460	1,080
Typical flow rate	m^3/h	5 – 10	10 – 15	25 – 35
Operating pressure	bar	0.6 – 1.8	0.6 – 1.8	0.6 – 1.8
Reaction tank connection size		DN 40	DN 50	DN 80
Dimensions H x W x D	mm	2,000 x 850 x 760	2,200 x 850 x 760	2,600 x 1,100 x 1,160
Weight	kg	200	250	350
Connected load	V/Hz/A	230/50;60/2	230/50;60/3	230/50;60/6

All features of the three standard versions can be adapted to specific project-related customer requirements.

2 OZONFILT® And Bono Zon® Ozone Plants

2.5 OZONFILT® OZMa

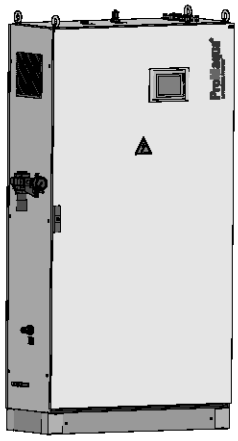

P_PMA_OF_0010_SW

Ozone plants of the type series OZONFILT® OZMa are pressure systems which generate ozone using compressed air or oxygen under medium-frequency high voltage. The electronic power module offers complete protection for the electrical components (high-voltage transformer and power stage) and also permits a correct digital display of the ozone output in "gram/hour". It is thus possible to adjust any desired ozone quantity between 3 and 100 % of rated output reproducibly and largely independent of voltage and pressure fluctuations.

The use of an integrated, self-optimising (dynamic) variable pressure wing dryer ensures a minimum compressed air consumption of the air systems. The use of a dielectric with optimum thermal conductivity results in an extraordinary compact design of the plant and minimum energy consumption. The novel design of the generator ensures excellent cooling with low cooling water consumption and quickly removes the generated heat before the ozone produced can degrade because of the high temperature.

A simple and safe operation is ensured by the programmable logic controller (PLC) in industry standard and the clear touch panel with data logger and screen recorder. Communication interfaces such as LAN or PROFIBUS® DP ensure an easy installation in industrial control systems; remote diagnosis and communication are facilitated via interfaces such as ISDN or GSM.

An ozone sensor can be directly connected to the ozone measuring and control device integrated in the PLC. Thus, the ozone fed to the water can be monitored and the ozone output can be directly controlled.

Thanks to operation under pressure, the generated ozone can be directly fed to water systems with a backpressure of up to 2 bar. Additional pressure-increasing pumps and injectors thus become superfluous in many applications.

Features

- Simple installation thanks to compact design and single-phase voltage supply
- Low compressed air consumption thanks to dynamic variable pressure swing dryer with low priming pressure (air systems)
- Minimum energy and cooling water consumption thanks to new, maintenance-free generator concept
- Electronical power module with automatic ozone generation largely independent of voltage and pressure fluctuations. Thus maximum error tolerance with regard to influences from installation environment
- Infinitely variable adjustment of any desired ozone quantity between 3 and 100 % of rated output
- PCL with integrated ozone measurement and control
- 5.7" touch panel with data logger and screen recorder
- Multiple communications interfaces (e.g. LAN, Profibus DP, ISDN, GSM)
- Easy integration of customer-specific control requirements

2 OZONFILT® And Bono Zon® Ozone Plants

2.5.1 OZONFILT® Ozone Generation Plants OZMa 1-6 A (Operating Gas - Air)

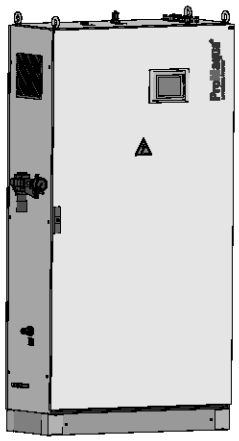

P_PMA_OF_0010_SW

Under nominal conditions, the OZMa 1-6 A range produces up to 420 g/h of ozone from compressed air at a concentration of 20 g/Nm^3. Using the designated mixing devices, ozone concentrations between 3 and 12 ppm can be achieved in the water to be treated, depending on the temperature (theoretical value at 30 or 0 °C).

Different feature options can be compiled by combining different Identcode characteristics (see Chap. 2.4.3).

The plants are pre-mounted ready for connection in a painted steel cabinet (optional stainless steel control cabinet) and must only be connected to a single-phase voltage supply, compressed air, cooling water/ waste water and ozone metering point at the customer's site.

For the operation of the ozone plant, an adequate compressed air supply and a mixing device designed for the operating conditions are to be integrated (see Chap. 2.6.3).

Requirements on the compressed air supply

- Oil- and dust-free, non-corrosive, constant upstream pressure of 4.5 - 10 bar
- Required air quantity:
  OZMa 1 A: 73 l/min
  OZMa 2 A: 110 l/min
  OZMa 3 A: 147 l/min
  OZMa 4 A: 220 l/min
  OZMa 5 A: 293 l/min
  OZMa 6 A: 440 l/min

Mixing device

All OZMa plants are in principle delivered without mixing device, a suitable mixing system must be ordered separately (see Chap. 2.6.3). When selecting a suitable mixing device, please note that the mixing of ozone is the more efficient the higher the water flow in the mixing system is. The mixing system should thus be designed such that the flow of the water to be treated is at the upper range of the flow specification.

Notes on installation

The length of ozone gas transporting pipes and the number of joints should be kept to a minimum. All rooms with a removable joint are to be monitored with a gas detector according to the valid German accident prevention regulations. All OZONFILT® plants are equipped for fitting a gas detector such as e.g. type GMA 36 Ozon (see Chap. 2.6.6).

Ozonisation contributes a large amount of gas to the water of which only a small percentage can dissolve. An adequate bleeding is thus to be integrated. Because the gases discharged this way have a considerable residual ozone concentration, suitable residual ozone destructors must be installed (see Chap. 2.6.5).

For all installations the ozone generator must be interlocked with the water flow into the metering point.

To prevent any return of ozonised water into the ozone-transporting pipe, a non-return valve is to be installed between OZMa and ozone metering point.

2 OZONFILT® And Bono Zon® Ozone Plants

Technical Data

OZONFILT® Ozone Generation Systems OZMa 1-3 A (Process Gas - Air)

Ambient parameters

max. 85 % relative humidity of ambient air, non-condensing, non-corrosive, dust-free, max. ambient temperature: 40 °C

		OZMa 1A	OZMa 2A	OZMa 3A
Number of generator modules		1	1	1
Ozone capacity, measured in accordance with DIN with air at 20 °C, cooling water at 15 °C	g/h	70	105	140
Air consumption (only ozone generation)	Nm^3/h	3.50	5.25	7.00
Ozone concentration in the gas phase referenced to nominal conditions	g/Nm^3 *	20	20	20
Specific energy requirement at nominal capacity	Wh/g	16.5	16.5	16.5
Power factor at full capacity	cos ϕ	0.95	0.95	0.95
Ozone connection		G 3/8" internal	G 3/8" internal	G 3/8" internal

* Nm^3= m^3at standard conditions (P = 1.013x10^5Pa, T = 273 K)

Electrical connection

		OZMa 1A	OZMa 2A	OZMa 3A
Connected load	V/Hz/A	230/50;60/10	230/50;60/16	230/50;60/16
Enclosure rating		IP 43	IP 43	IP 43

Overall dimensions (without mixing)

		OZMa 1A	OZMa 2A	OZMa 3A
Width	mm	1,114	1,114	1,114
Height	mm	1,961	1,961	1,961
Depth	mm	400	400	400

Weight

		OZMa 1A	OZMa 2A	OZMa 3A
Weight	kg	270	280	300

Ozone mixing

		OZMa 1A	OZMa 2A	OZMa 3A
Raw water temperature max.	°C	35	35	35
Permissible pressure at ozone outlet	bar	0.8–2.0	0.8–2.0	0.8–2.0

Air supply

		OZMa 1A	OZMa 2A	OZMa 3A
Required air quantity	l/min	73	110	147

Air quality Oil- and dust-free, Non-corrosive, Constant upstream pressure of 4.5 - 10 bar

Cooling water

		OZMa 1A	OZMa 2A	OZMa 3A
Cooling water consumption (15 °C)	l/h	90	135	180
Cooling water consumption (30 °C)	l/h	200	300	400
Cooling water inlet pressure	bar	2–5	2–5	2–5
Cooling water inlet, PE pressure hose	mm	8 x 5	8 x 5	12 x 9
Cooling water outlet, open discharge	mm	8 x 5	8 x 5	12 x 9

Cooling water quality No tendency to form lime scale; Removable substances: < 0.1 ml/l ; Iron: < 0.2 mg/l; Manganese: < 0.05 mg/l; no corrosive components; Conductivity: > 100 µS/cm

2 OZONFILT® And Bono Zon® Ozone Plants

OZONFILT® Ozone Generation Systems OZMa 4-6 A (Process Gas - Air)

Ambient parameters

max. 85 % relative humidity of ambient air, non-condensing, non-corrosive, dust-free, max. ambient temperature: 40 °C

		OZMa 4A	OZMa 5A	OZMa 6A
Number of generator modules		2	2	3
Ozone capacity, measured in accordance with DIN with air at 20 °C, cooling water at 15 °C	g/h	210	280	420
Air consumption (only ozone generation)	Nm^3/h	10.50	14.00	21.00
Ozone concentration in the gas phase referenced to nominal conditions	g/Nm^3 *	20	20	20
Specific energy requirement at nominal capacity	Wh/g	16.5	16.5	16.5
Power factor at full capacity	cos ϕ	0.95	0.95	0.95
Ozone connection		G 3/8" internal	G 3/8" internal	G 3/8" internal

* Nm^3= m^3at standard conditions (P = 1.013x10^5Pa, T = 273 K)

Electrical connection

		OZMa 4A	OZMa 5A	OZMa 6A
Connected load	V/Hz/A	400/50;60/16	400/50;60/16	400/50;60/16
Enclosure rating		IP 43	IP 43	IP 43

Overall dimensions (without mixing)

		OZMa 4A	OZMa 5A	OZMa 6A
Width	mm	1,314	1,314	1,314
Height	mm	1,961	1,961	1,961
Depth	mm	600	600	600

Weight

		OZMa 4A	OZMa 5A	OZMa 6A
Weight	kg	–	–	–

Ozone mixing

		OZMa 4A	OZMa 5A	OZMa 6A
Raw water temperature max.	°C	35	35	35
Permissible pressure at ozone outlet	bar	0.8–2.0	0.8–2.0	0.8–2.0

Air supply

		OZMa 4A	OZMa 5A	OZMa 6A
Required air quantity	l/min	220	293	440

Air quality Oil- and dust-free, Non-corrosive, Constant upstream pressure of 4.5 - 10 bar

Cooling water

		OZMa 4A	OZMa 5A	OZMa 6A
Cooling water consumption (15 °C)	l/h	270	360	540
Cooling water consumption (30 °C)	l/h	600	800	1,200
Cooling water inlet pressure	bar	2–5	2–5	2–5
Cooling water inlet, PE pressure hose	mm	12 x 9	12 x 9	12 x 9
Cooling water outlet, open discharge	mm	12 x 9	12 x 9	12 x 9

Cooling water quality No tendency to form lime scale; Removable substances: < 0.1 ml/l ; Iron: < 0.2 mg/l; Manganese: < 0.05 mg/l; no corrosive components; Conductivity: > 100 µS/cm

2 OZONFILT® And Bono Zon® Ozone Plants

2.5.2 OZONFILT® Ozone Generation Plants OZMa 1-6 O (Operating Gas - Oxygen)

Under nominal conditions, the OZMa 1-6 O range produces up to 735 g/h of ozone from oxygen at a concentration of up to 150 g/Nm³. Using the designated mixing devices, ozone concentrations in the water to be treated of up to 90 ppm can be achieved (theoretical value at 0 °C). Ozone concentration in g/Nm³ and system feed rate in g/h can be varied depending on the operating conditions and can thus be individually matched to the application conditions. Examples for various combinations are listed in the table of the technical data.

Different feature options can be compiled by combining different Identcode characteristics (see Chap. 2.4.3).

The plants are pre-mounted ready for connection in a painted steel cabinet (optional stainless steel control cabinet) and must only be connected to a single-phase voltage supply, oxygen, cooling water/waste water and ozone metering point at the customer's site.

Requirements on the oxygen supply

- See technical data
- Required gas quantities: see technical data

Mixing device

All OZMa plants are in principle delivered without mixing device, a suitable mixing system must be ordered separately (see Chap. 2.6.3). When selecting a suitable mixing device, please note that the mixing of ozone is the more efficient the higher the water flow in the mixing system is. The mixing system should thus be designed such that the flow of the water to be treated is at the upper range of the flow specification.

Because of the high ozone concentrations, we recommend mixing systems made of stainless steel. Mixing systems made of PVC may show a reduced service life, depending on the operating conditions.

Notes on installation

The length of ozone gas transporting pipes and the number of joints should be kept to a minimum. All rooms with a removable joint are to be monitored with a gas detector according to the valid German accident prevention regulations. All OZONFILT® plants are equipped for fitting a gas detector such as e.g. type GMA 36 Ozon (see Chap. 2.6.6).

Depending on the operating and installation conditions, it might be necessary to also monitor the room air for excessive oxygen content. For this purpose, the gas detector GMA 36 Oxygen can be used.

All gas-transporting accessories must be resistant to ozone and oxygen (e.g. fat-free).

Ozonisation contributes a large amount of gas to the water of which only a small percentage can dissolve. An adequate bleeding is thus to be integrated. Because the gases discharged this way have a considerable residual ozone concentration, suitable residual ozone destructors must be installed (see Chap. 2.6.5). Because of the high ozone concentrations, only catalytic residual ozone destructors can be used. Residual ozone destructors on the basis of active carbon ignite spontaneously if subjected to increased ozone concentrations.

For all installations the ozone generator must be interlocked with the water flow into the metering point.

To prevent any return of ozonised water into the ozone-transporting pipe, a non-return valve is to be installed between OZMa and ozone metering point.

2 OZONFILT® And Bono Zon® Ozone Plants

Technical Data

OZONFILT® Ozone Generation Systems OZMa 1-3 O (Process Gas - Oxygen)

		OZMa 1 O	OZMa 2 O	OZMa 3 O
Number of generator modules		1	1	1
Nominal ozone capacity at 100 g/Nm³ ** and cooling water at 15 °C	g/h	105	158	210
Ozone capacity at 150 g/Nm³ *	g/h	60	90	120
Ozone capacity at 80 g/Nm³	g/h	123	184	245
Specific energy requirement at nominal capacity	Wh/g	9	9	9
Power factor at full capacity	cos ϕ	0.95	0.95	0.95
Ozone connection		G 3/8" internal	G 3/8" internal	G 3/8" internal

Electrical connection

		OZMa 1 O	OZMa 2 O	OZMa 3 O
Connected load	V/Hz/A	230/50;60/10	230/50;60/16	230/50;60/16
Enclosure rating		IP 43	IP 43	IP 43

Overall dimensions

		OZMa 1 O	OZMa 2 O	OZMa 3 O
Width	mm	1,114	1,114	1,114
Height	mm	1,961	1,961	1,961
Depth	mm	400	400	400

Weight

		OZMa 1 O	OZMa 2 O	OZMa 3 O
Weight	kg	220	230	250

Ozone mixing

		OZMa 1 O	OZMa 2 O	OZMa 3 O
Raw water temperature max.	°C	35	35	35
Permissible pressure at ozone outlet	bar	0.8–2.0	0.8–2.0	0.8–2.0

Specification of operating gas: oxygen

		OZMa 1 O	OZMa 2 O	OZMa 3 O
Gas volume at nominal capacity 100 g/Nm³	Nl/h	1,050	1,580	2,100
Gas volume at capacity 150 g/Nm³	Nl/h	400*	600*	800*
Gas volume at capacity 80 g/Nm³	Nl/h	1,540	2,300	3,100
Concentration min.	vol%	90	90	90
Dew point max.	°C	-50	-50	-50
Pressure	bar	3 – 6	3 – 6	3 – 6
Particles max.	µm	5	5	5
Hydrocarbons max.	ppm	20	20	20
Max. temperature	°C	30	30	30

Cooling water

		OZMa 1 O	OZMa 2 O	OZMa 3 O
Cooling water consumption (15 °C)	l/h	120	180	240
Cooling water consumption (30 °C)	l/h	200	300	400
Cooling water inlet pressure	bar	1–5	1–5	1–5
Cooling water inlet, PE pressure hose	mm	8 x 5	8 x 5	12 x 9
Cooling water outlet, open discharge	mm	8 x 5	8 x 5	12 x 9

Cooling water quality No tendency to form lime scale, no corrosive components; Sedimentable substances: < 0.1 ml/l; Iron: < 0.2mg/l; Manganese: < 0.05 mg/l; Conductivity: > 100 µS/cm; Chloride: < 250 mg/l

* Output 150 g/Nm³as special version must be factory-set

** Nm^3= m^3at standard conditions (P = 1.013x10^5Pa, T = 273 K)

2 OZONFILT® And Bono Zon® Ozone Plants

OZONFILT® Ozone Generation Systems OZMa 4-6 O (Process Gas - Oxygen)

		OZMa 4 O	OZMa 5 O	OZMa 6 O
Number of generator modules		2	2	3
Nominal ozone capacity at 100 g/Nm³ ** and cooling water at 15 °C	g/h	320	420	630
Ozone capacity at 150 g/Nm³ *	g/h	180	240	360
Ozone capacity at 80 g/Nm³	g/h	370	490	735
Specific energy requirement at nominal capacity	Wh/g	9	9	9
Power factor at full capacity	cos ϕ	0.95	0.95	0.95
Ozone connection		G 3/8" internal	G 3/8" internal	G 3/8" internal

Electrical connection

		OZMa 4 O	OZMa 5 O	OZMa 6 O
Connected load	V/Hz/A	400/50;60/16	400/50;60/16	400/50;60/16
Enclosure rating		IP 43	IP 43	IP 43

Overall dimensions

		OZMa 4 O	OZMa 5 O	OZMa 6 O
Width	mm	1,314	1,314	1,314
Height	mm	1,961	1,961	1,961
Depth	mm	600	600	600

Weight

		OZMa 4 O	OZMa 5 O	OZMa 6 O
Weight	kg	–	–	–

Ozone mixing

		OZMa 4 O	OZMa 5 O	OZMa 6 O
Raw water temperature max.	°C	35	35	35
Permissible pressure at ozone outlet	bar	0.8–2.0	0.8–2.0	0.8–2.0

Specification of operating gas: oxygen

		OZMa 4 O	OZMa 5 O	OZMa 6 O
Gas volume at nominal capacity 100 g/Nm³	Nl/h	3,200	4,200	6,300
Gas volume at capacity 150 g/Nm³	Nl/h	1,200*	1,600*	2,400*
Gas volume at capacity 80 g/Nm³	Nl/h	4,630	6,130	9,190
Concentration min.	vol%	90	90	90
Dew point max.	°C	-50	-50	-50
Pressure	bar	3 – 6	3 – 6	3 – 6
Particles max.	µm	5	5	5
Hydrocarbons max.	ppm	20	20	20
Max. temperature	°C	30	30	30

Cooling water

		OZMa 4 O	OZMa 5 O	OZMa 6 O
Cooling water consumption (15 °C)	l/h	200	280	420
Cooling water consumption (30 °C)	l/h	330	470	700
Cooling water inlet pressure	bar	1–5	1–5	1–5
Cooling water inlet, PE pressure hose	mm	12 x 9	12 x 9	12 x 9
Cooling water outlet, open discharge	mm	12 x 9	12 x 9	12 x 9

Cooling water quality No tendency to form lime scale, no corrosive components; Sedimentable substances: < 0.1 ml/l; Iron: < 0.2mg/l; Manganese: < 0.05 mg/l; Conductivity: > 100 µS/cm; Chloride: < 250 mg/l

* Output 150 g/Nm³as special version must be factory-set

** Nm³= m³at standard conditions (P = 1.013x10⁵Pa, T = 273 K)

2 OZONFILT® And Bono Zon® Ozone Plants

2.5.3 Order Information For OZONFILT® OZMa Plants

OZMa	Type ozone generator													
		g/h												
	01	70												
	02	105												
	03	140												
		Operating gas												
		A	Operating gas - air											
		O	Operating gas - oxygen											
			Type											
			P	ProMaqua										
				Mechanical design										
				0	Standard (packaging for transport by HGV)									
				1	Standard (packaging for sea/air freight)									
				2	In stainless steel cabinet (packaging for transport by HGV)									
				3	In stainless steel cabinet (packaging for sea/air freight)									
					Operating voltage									
					A	Single-phase 230 V ±10 %, 50/60 Hz (only types 01-03)								
						Gas treatment								
						0	Gas treatment not integrated (design operating gas - oxygen)							
						1	Gas treatment integrated without filter package (design operating gas - air)							
						2	Gas treatment integrated with filter package (design operating gas - air)							
							Preset language							
							DE	German						
							EN	English						
							FR	French						
							ES	Spanish						
								Control						
								0	Basic version with digital input to control two adjustable power stages					
								1	External power control via 0/4-20 mA input, data logger					
								2	External power control, ozone measurement and visualisation via screen recorder, 2 freely configurable 0/4-20 mA inputs, 1 freely configurable 0/4-20 mA output					
								3	As 2 with additionally integrated PID controller for control of the ozone concentration independent of measured value and flow					
									Communication interfaces					
									0	None				
									1	LAN port				
									4	PROFIBUS® DP interface				
										Additional options				
										0	None			
										1	Dew point sensor			
										2	Oxygen measuring cell			
										3	Dewpoint sensor and oxygen measuring cell			
											Approvals			
											01	CE-mark		
												Hardware		
												0	Standard	
													Software	
													0	Standard

Explanations on the Identcode:

Mechanical design: In the design 0 and 1, the plant is installed in a standard control cabinet made of powder-coated steel.

Gas treatment: Without filter package for oil-free generated or already de-oiled compressed air.

With filter package for compressed air with residual oil content.

2 OZONFILT® And Bono Zon® Ozone Plants

2.6 Bono Zon® Ozone Plants

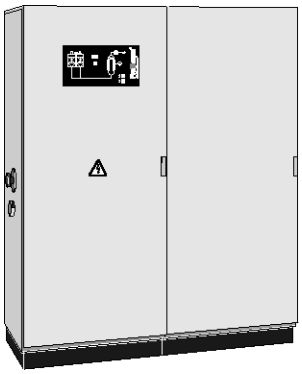

pk_7_002_V2

BONa 2A, capacity 160 g/h

BONa Range: Capacity Range 40-720 g/h

BONa plants are designed as vacuum plants and so comply with the highest safety measures. A clear, easy to read display panel provides information on air flow, voltage, power consumption and the status of the air treatment.

The ozone capacity can be steplessly adjusted over the full capacity range. The entire process control and monitoring of safety-related parameters takes place with the aid of the integrated PLC.

Minimal operating costs are achieved through the load-dependent regeneration of the air treatment and a significant reduction in the cooling water requirement.

Bono Zon® plants comply with the German standard for ozone production plants, DIN 19 627.

Bono Zon® plants are fitted with a reliable and economical adsorption drying system. The load-dependent control of the adsorption regeneration ends the heating phase when the breakdown temperature is reached. The required dew point is ensured at all times and the operating costs are minimised at the same time. This ensures optimum operational safety of the ozone plant.

The control for the booster pump and the protection device are integrated in the electrical cabinet of the BONa plant.

Features

- Choice of stainless steel or PVC ozone generation modules
- Automatic electronic overload detection linked to safety disconnection, even with part load operation.
- PLC Siemens® Simatic S7 controls all process sequences and issues fault messages if anomalies occur.
- Clear, easy to understand display and operating panel: the ozone generation sequence is displayed on the flow diagram. LED displays inform the operator of the current operating status and the set values, e.g. volume flow (take-off gas), primary voltage and primary current are displayed.
- Ozone generator(s) optimised for minimum power consumption. Power requirement 18.7 Wh/g.
- Stepless adjustment of ozone generation to demand by means of a regulating transformer, fitted with an electric actuator if required.
- Our DULCOTEST® OZE ozone sensor can be connected directly.
- The control for booster pump and the protection device are integrated in the electrical cabinet
- Clear, easy to read display area with operating and fault lamps and digital measuring instruments integrated in a display panel.
- Vacuum operation ensures highest possible protection against ozone escape.
- Air treatment using cost-effective adsorption drying plant. An optimum dew point is ensured by means of thermostatically-controlled regeneration.
- Bono Zon® plants comply with the German standard for ozone production plants, DIN 19627

Nominal ozone concentration

20 g/m^3 (based on standard conditions p=1.013x10^5 Pa, T=273 K), measured with a cooling water temperature of 15 °C max., at an ambient air temperature of 20 °C max.

Design Conditions in Accordance with DIN 19627

Max. 30 °C; 60 % rel. humidity, dust-free installation, no aggressive gases, supply and extract air ventilation of the installation room.

An air conditioning system may be required with elevated ambient temperature and/or humidity at the installation position of the plant. Please specify separately at time of ordering! Suitable measures (e.g. air conditioning of the installation room) must be taken to prevent condensation forming, even when the plant is shut down.

Standard values for cooling water quality:

- Temperature < 25 °C
- Replaceable substances < 0.1 ml/l
- Iron < 0.2 mg/l
- Manganese < 0.05 mg/l
- Chloride < 250 mg/l (BONa D und E)
- No tendency to form lime deposits
- No corrosive components

2 OZONFILT® And Bono Zon® Ozone Plants

Design

For optimum operation of a water treatment system using ozone, it is essential that all components are carefully matched with each other:

- Ozone generation:
  Selection of a suitable ozone plant is not just determined by the required quantity of ozone/hour but also by other limiting conditions such as the nature and temperature of the cooling water and the environmental conditions, etc.
- Mixing:
  First and foremost, the parameters of the water to be treated, such as flow rate, back pressure, etc. are required for the design the mixing system.
- Reaction tank:
  Whether a reaction tank is required, and if so, what size and equipment is required, depends primarily on the requirements of the particular application.
- Residual ozone destruction:
  Similarly, the choice of the suitable ozone destructor is determined by the ozonisation application. As an example, no catalytic residual ozone destructors can be used in the swimming pool, because of their sensitivity to chlorine.

The diagram below shows a typical arrangement of an ozone treatment system. For each ozone project, our project engineers combine all the right components to meet specific customer requirements.

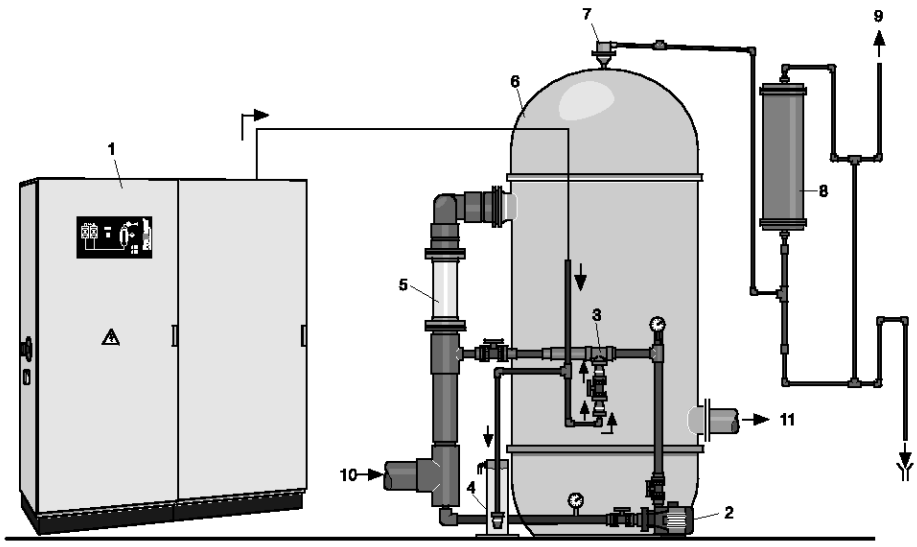

pk_7_003_1

1 Ozone plant type BONa
2 Booster pump
3 Injector system
4 Water trap
5 Mixer
6 Reaction tank
7 Vent valve
8 Residual ozone destructor
9 Ozone-free exhaust air
10 Raw water
11 Ozonised water

BONa ozone production plant with mixing device, reaction tank and residual ozone destruction

2 OZONFILT® And Bono Zon® Ozone Plants

2.6.1 Bono Zon® Ozone Plant With Ozone Generator Made Of Stainless Steel

Depending on capacity, the ozone plants in this range are equipped with 1 – 9 ozone generators made from stainless steel. Indirect cooling of the dielectrics eliminates the possibility of cooling water ingress. Individual electrodes can be easily replaced without any need to empty the entire reactor. This ensures a high level of reliability and makes the plant very service-friendly.

The operating pressure of the ozone generator is –0.08 to 0 bar and must be produced with an injector system matched to the particular application.

Ozone generators made from PVC are optionally available for use in connection with corrosive cooling water..

Technical Data

Bono Zon® Ozone Plant With Ozone Generator Made Of Stainless Steel

Type		1D	2E	2D	3D	4D	5D	6D	7D	8D	9D
Number of generator modules		1	2	2	3	4	5	6	7	8	9
Ozone capacity, measured in accordance with DIN, with air 20°C, cooling water 15°C	g/h	80	120	160	240	320	400	480	560	640	720
Air flow for ozone production max.	m^3/h	4	6	8	12	16	20	24	28	32	36
Ozone generation power consumption (without air treatment)	kW	1.5	2.2	3.0	4.5	6.0	7.5	9.0	10.5	12.0	13.5
Ozone connection		DN 15	DN 20	DN 20	DN 32	DN 32	DN 32	DN 40	DN 40	DN 40	DN 50

Cooling water

Type		1D	2E	2D	3D	4D	5D	6D	7D	8D	9D
Cooling water requirement cooling water temperature 15°C and air temperature < 25 °C	m^3/h	0.1	0.2	0.2	0.3	0.4	0.5	0.6	0.7	0.8	0.9
Cooling water requirement cooling water temperature 25°C and air temperature < 30 °C	m^3/h	0.3	0.6	0.6	0.9	1.2	1.5	1.8	2.1	2.4	2.7
Cooling water inlet pressure (before pressure reducer)	bar	1.5–6	1.5–6	1.5–6	1.5–6	1.5–6	1.5–6	1.5–6	1.5–6	1.5–6	1.5–6
Cooling water inlet	G..i	3/8"	1/2"	1/2"	1/2"	1/2"	1/2"	1/2"	1/2"	1/2"	1/2"
Cooling water outlet, open discharge		1/2	3/4	3/4	3/4	3/4	3/4	3/4	3/4	3/4	3/4

Electrical connection

Type		1D	2E	2D	3D	4D	5D	6D	7D	8D	9D
Mains supply, incl. booster pump	kVA	5.5	7.0	10.0	14.5	20.0	22.5	27.5	34.0	36.0	38.0
Infeed	3x A	25	50	50	63	50	63	80	80	80	80
Enclosure rating		IP 23	IP 23	IP 23	IP 23	IP 23	IP 23	IP 23	IP 23	IP 23	IP 23

Ozone conveying device interface

Type		1D	2E	2D	3D	4D	5D	6D	7D	8D	9D
Connection for booster pump	A	2.5-4	4-6.3	4-6.3	6-10	6-10	6-10	9-14	13-18	13-18	13-18
Motor circuit breaker (standard value)	kW	1.1	2.2	2.2	3.0	4.0	4.0	5.5	7.5	7.5	7.5

Overall dimensions

Type		1D	2E	2D	3D	4D	5D	6D	7D	8D	9D
Width	mm	800	1,600	1,600	2,000	2,400	2,400	2,800	3,200	3,400	3,400
Height	mm	1,950	1,950	1,950	1,950	2,200	2,200	2,200	2,200	2,200	2,200
Depth	mm	500	500	500	500	600	600	600	600	600	600

Weight

Type		1D	2E	2D	3D	4D	5D	6D	7D	8D	9D
Weight	kg	360	700	720	820	1,200	1,280	1,360	1,920	1,980	2,000

2 OZONFILT® And Bono Zon® Ozone Plants

2.7 Accessories For Ozone Plants

2.7.1 Compressors For OZONFILT® OZVa 1-4

Atlas Copco LFX compressors

The outstanding feature of this range of compressors is their especially favourable price/performance ratio. They are equipped with active start unloading and automatic condensate discharge by solenoid valve. The compressors are not suitable for continuous operation and should only be used in less harsh operating conditions.

Technical Data

Type		LFX 0,7	LFX 1,5
Free air delivery rate at 7 bar	l/min	61	124
Power consumption at 7 bar	W	530	970
Number of cylinders		1	1
Sound pressure level	dB(A)	62	64
Air receiver capacity	l	20	20
Weight	kg	44	48
Suitable for OZVa Type		1 + 2	3 + 4

Type	Type	Order no.
LFX 0,7	230 V / 50 Hz	1004458
LFX 0,7	230 V / 60 Hz	1010719
LFX 1,5	230 V / 50 Hz	1006343
LFX 1,5	230 V / 60 Hz	1009638

Air filter kit

	Order no.
Air filter kit for Atlas Copco LFX compressors	1005789

Dürr ABK compressors

The outstanding feature of this continuously rated range of compressors is their extremely robust construction, making them ideally suitable for industrial use. They are equipped with active start unloading, automatic condensate discharge by solenoid valve and an hours-run meter. PTFE coated special aluminium pistons lead to the long service life and reliability of these compressor units.

Technical Data

Type		TA-080	HA-234
Free air delivery rate at 7 bar	l/min	62	152
Supply max.	VAC	230	230
Supply frequency	Hz	50 / 60	50
Power consumption at 7 bar	W	800	1,900
Number of cylinders		1	3
Sound pressure level	dB(A)	68	78
Air receiver capacity	l	25	55
Weight	kg	49	70
Suitable for OZVa Type		1 + 2	3 + 4

Type	Order no.
TA-080	1025398
HA-234	1025399

Air filter kit

	Order no.
Air filter kit for Dürr ABK compressors*	1025400

* 1 filter kit is required per cylinder.

Compressors with refrigeration drying for operation in conditions of high humidity, and high-capacity screw compressors for connection to several ozone plants are available on request.

2.7.2 Oxygen Generator For OZONFILT® OZVa 5-7

OXYMAT 020

This compact oxygen generator works on the principle of pressure swing filtration of the surrounding air via a molecular sieve. When supplied with suitably dried compressed air, oxygen is generated with a purity of up to 95 % and a dew point of –70 °C. The plant develops a pressure of 4 bar at the oxygen outlet and can be directly connected to the OZVa 5-7.

Technical Data

(at 90 % oxygen yield):

Type		Version 1	Version 2
Capacity	Nm^3/h	0.9	1.2
Air requirement (min. 6 bar)	Nm^3/min	0.17	0.24
Power consumption incl. compressor	kW	1.5	2.5
Specific energy requirement	kWh/Nm^3	1.7	2.1

Required components for version 1

	Order no.
OXYMAT 020, 110-240 V / 50-60 Hz	1025383
Reciprocating compressor (oil-lubricated) Atlas Copco LE 2-10 E/100, with 100 l air receiver, 400 V / 50 Hz	1025384
Refrigeration dryer FD 5, 230 V / 50 Hz	1025385
Filter set 006, for LE 2-10 and GX 2-10 FF	1025387
Hose set with quick-release couplings, LE 2-10 to OXYMAT 020 LE 2-10 to OXYMAT 020	1025388
Connecting set with connections for 6x4 mm PTFE hose, between OXYMAT and OZVa	1025395

Required components for version 2

	Order no.
OXYMAT 020, 110-240 V / 50-60 Hz	1025383
Atlas Copco Aircenter GX 2-10 FF/200, with screw compressor (oil injection), integrated refrigeration drying and 200 l air receiver, 400 V / 50 Hz	1025386
Filter set 006, for LE 2-10 and GX 2-10 FF	1025387
Hose set with quick-release couplings, for connection of air treatment GX 2-10 FF with OXYMAT 020	1025389
Connecting set with connections for 6x4 mm PTFE hose, between OXYMAT and OZVa	1025395

Accessories

	Order no.
PTFE hose 6x4 mm, Admissible operating pressure 15 bar, sold in meters	037426
Service kit for Atlas Copco LE 2-10, (recommended after 8000 running hours)	1025390
Service kit for Atlas Copco GX 2-10 FF, (recommended after 8000 running hours)	1025391
Service kit 006, for Atlas Copco LE 2-10 and GX 2-10 FF	1025392

2.7.3 Static Helical Mixer Made From PVC Or Stainless Steel

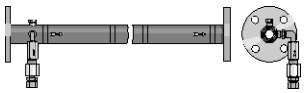

pk_7_072
Static Helical Mixer

Designed for intensive mixing of gas with liquid flows. 4 helical blades ensure optimum mixing of the ozone with minimal pressure drop (0.1 bar per blade at maximum flow). For optimum mixing results, the specified flow range of the static helical mixer must be complied with.

Version with loose flanges to DIN 2501 and integrated injection point made from stainless steel with couplings for 12 mm diam. stainless steel tube, or 12/9 mm PTFE hose, using stainless steel support inserts. In addition, the injection point is fitted with a non-return valve to protect the ozone plant from reverse flowing water. The mixers are manufactured as grease-free, so they are also suitable for Types OZVa 5-7. The stainless steel version has a G 1/4“ pressure gauge tapping at the ozone mixing point.

Flow m^3/h	Material	Overall length mm	Connector	Order no.
5 – 10	PVC-U	718	DN 40	1024324
10 – 15	PVC-U	718	DN 50	1024325
15 – 25	PVC-U	718	DN 65	1024326
25 – 35	PVC-U	1,100	DN 80	1024327
35 – 50	PVC-U	1,100	DN 100	1024328
50 – 90	PVC-U	1,300	DN 125	1034641
95 – 160	PVC-U	1,700	DN 150	1034640
5 – 10	1.4404	718	DN 40	1022503
10 – 15	1.4404	718	DN 50	1022514
15 – 25	1.4404	718	DN 65	1022515
25 – 35	1.4404	1,100	DN 80	1022516
35 – 50	1.4404	1,100	DN 100	1024154

Other sizes on request

Connecting parts for the gas pipeline

	Order no.
Stainless steel pipe 12/10 mm, Sold by meter	015743
Stainless steel pipe 12/10 mm, grease-less, 1.4 m	1022463
PTFE hose 12/9 mm, grease-less, sold in meters	037428
Stainless steel support inserts, 2 No. for 12/9 mm PTFE hose, grease-less	1025397
Stainless steel coupling 12 mm - R 1/4, grease-less	1025755
Stainless steel fitting 12 mm - R 3/8,grease-less	1034642
Stainless steel 90° elbow D 12 - D 12, grease-less	1022462
Stainless steel pressure relief valve, Adjustable pressure range 0.07 – 2 bar, Connection size: 1/4" NPT, 2 additional inputs for connecting 2 pressure gauges.	1029032

2 OZONFILT® And Bono Zon® Ozone Plants

2.7.4 Accessories For Bono Zon® Ozone Plants

Water trap

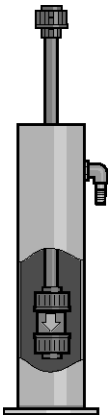

pk_7_071
Water trap

Water trap as a vacuum breaker to prevent backflow of water into the ozone generator.

Pre-assembled unit consisting of PVC loss vessel including overflow with DN 10 hose spigot, and a non-return valve with DN 20 PVC coupling.

	Order no.
Water trap	1008781

Ozone mixing

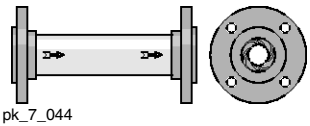

pk_7_044
Static mixer

Static mixer designed for intensive mixing of gas with liquid flows. Made from PVC-U with two built-in helical mixers and a mixing section matched to the throughput.

The size depends only on the quantity of water to be ozonised.

Pressure rating: PN 4, other pressure ratings available on request.

Connection DN 65-200: loose flanges PN 10.

Recommended flow	Flange connection DN	Length	Order no.
m^3/h	mm	mm	
15–25	65	350	1007841
25–35	80	450	1007842
35–50	100	550	1007843
50–90	125	650	1007864
90–160	150	800	1007865
160–250	200	1,000	1007866
250–350	200	1,000	1007867

Higher flows on request.

Stainless steel version: on request

Ozone pumping devices

Complete ozone pumping devices consist of booster pump, injector and mixer and are assembled to suit specific project requirements. Design and technical details on request.

Vent valves

Vent valves made from stainless steel 1.4571 in ozone-resistant version for mounting on reaction tanks.

Suitable for BONa types	Connector	Pressure	Order no.
		bar	
1B	R 3/4" internal x R 1/2" external	0.5 – 6.0	302525
1A, 1D	R 1" internal x R 1/2" external	0.5 – 6.0	302526
to 3A, 3D	R 1" internal x R 3/4" external	0.5 – 2.0	303845

2 OZONFILT® And Bono Zon® Ozone Plants

2.7.5 Residual Ozone Gas Destructor

Residual ozone gas destruction is used to remove traces of ozone gas from the exhaust air coming from the reaction tank. Because the exhaust air from the reaction tank still contains water, the pipework should be suitably routed so as to ensure that the water is drained off at the inlet side.

As the exhaust air after the residual ozone gas destructor is still up to 100 % saturated with water vapour, and because small temperature fluctuations, even on the outlet side, can lead to flowback of condensate, a suitable drainage connection must be provided here too.

The exhaust air from any downstream filter plant that may be fitted can also be routed via this ozone gas destruction unit.

PVC version

Residual ozone destructor based on active carbon granules in a PVC housing.

	Type	Ozone quantity g/h	Order no.
Residual ozone destructor 3 L	10	10	879022
Residual ozone destructor 14 L	40	40	1004267
Residual ozone destructor 30 L	100	100	879019
Residual ozone destructor 60 L	200	200	879018

Note:

The stated ozone quantities refer to quantities added to the raw water. The residual ozone destructor is designed for the normal residual ozone concentration found in swimming pool applications. It may only be used in plants with air as operating gas and a maximum added quantity of 1.5 g of ozone/m^3 treated water.

Stainless steel version

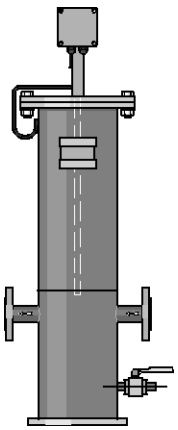

pk_7_073
Residual ozone destructor

Residual ozone destructor based on a maintenance-free MnO catalytic converter with integrated heating, 230 V, 50-60 Hz. Connections Rp 1/2“ or flanges to DIN 2642, PN10. Types 18 to 110 m^3/h also fitted with Rp 1/2" ball valve as condensate drain.

Max. gas flow m^3/h	Heating power W	Dimensions H x W x D mm	Connector	Order no.
1.5	100	700 x 110 x 180	Rp 1/2"	1018440
8.0	100	735 x 110 x 235	Rp 1/2"	1018406
18.0	140	1,154 x 275 x 240	DN 25	1019155
28.0	140	1,154 x 300 x 259	DN 25	1021037
40.0	500	1,156 x 330 x 264	DN 25	1026335
73.0	500	1,158 x 400 x 320	DN 32	1019971
110.0	500	1,160 x 450 x 375	DN 40	1027238

Note:

The catalytic residual ozone destructor must only be used in chlorine-free gas flows. The PVC version must therefore be used for swimming pool applications.

2 OZONFILT® And Bono Zon® Ozone Plants

2.7.6 Room Air Monitoring

Gas detectors GMA 36 ozone and oxygen



pk_7_004_1
Gas warning devices GMA 36

Calibratable gas warning devices with digital display of the detected gas concentration. 2 relay outputs for issue of infringements of warning and alarm thresholds, to switch external alarm sounder and for interlocking with the ozone plant. The warning message relay is self resetting, the alarm relay is a latching type and must be acknowledged at the device. 1 self-resetting relay for connection to an alarm horn is switched on fault conditions and when the alarm limit is exceeded.

The ozone sensor responds to all strongly oxidising gases, hence it responds to chlorine gas or chlorine dioxide too.

The GMA 36 oxygen warning device is intended for installations where an unacceptably high oxygen enrichment of the ambient air is possible.

Technical Data

Type		Ozone	Oxygen
Warning at approx.	ppm/vol%	0.3	23.0
Alarm at approx.	ppm/vol%	0.5	25.0
Permissible ambient temperature	°C	-15…45	-15…45
Protection class housing		IP 54	IP 54
Dimensions (without PGs, without sensor) H x W x D	mm	247 x 135 x 95	247 x 135 x 95
Supply	V/Hz	85 – 264/50 – 60	85 – 264/50 – 60
Power consumption	W	5	5
Warm-up phase max.	s	150	20
Relay contact "Warning", self-resetting	V/A	230/1	230/1
Relay contact "Alarm", latching	V/A	230/1	230/1
Relay contact "Horn", latching, can be acknowledged	V/A	230/1	230/1
Sensor measuring principle		electrochemical	electrochemical
Sensor service life (depending on environmental cond.)	Years	2–3	2–3

	Type	Order no.
Gas warning device Type GMA 36	Ozone	1023155
Gas warning device Type GMA 36	Oxygen	1023971

Spareparts

	Order no.
Replacement sensor for chlorine, chlorine dioxide, ozone	1023314
Replacement sensor for oxygen	1023851
Replacement sensor for gas warning devices in the Life CGM range	1003009

Mounting kit

	Order no.
Mounting kit for direct mounting of the CGM 1060 and GMA 36 ozone warning devices on the housing of the OZVa plants	1004248
Support bracket for mounting kit for all types of OZVa except OZVa 1/2 with transparent mixing system	1005854

Warning light and horn

Combined horn and red warning lamp. IP 33 enclosure made from impact-resistant ABS. Dome made from clear polycarbonate. Connected load: 230 V AC, 50 mA. Supplied complete with B 15 d / 7 watt bulb.

	Order no.
Warning light and horn	1010508

Gas tracing pump

Hand operated, non-continuously working test tube pump for fast and accurate measurement of ozone gas. Complete with 10 No. ozone gas test tubes 0.05-5 ppm in carrying case.

	Order no.
Gas tracing pump	1025533

Potassium iodide starch paper

Roll with 4.8 m test strip for leak detection on pipelines carrying ozone gas.

	Order no.
Potassium iodide starch paper	1025575

2.7.7 Personal Protection Needs

Gas mask

Ozone-resistant, full-face respiratory protective mask with panoramic window shield to EN 136 Class 3. Medium size with EN 148-1 threaded pipe connection. Complete with combination filter NO-P3 and carrying case.

	Order no.
Gas massk	1025574

Warning label

Warning label in accordance with the “Guidelines for the use of ozone for water treatment” ZH 1/474, issued by the central office of the industrial safety associations. Version supplied as a combined adhesive label with markings as follows: warning sign, ozone plant room indication and prohibited activity signs.

	Order no.
Warning label	740921

Emergency stop switch

For installation near the door of the ozone plant room. IP 65 PVC enclosure.

	Order no.
Emergency stop switch	700560

2 OZONFILT® And Bono Zon® Ozone Plants

3 Chlorine Dioxide Plants Bello Zon®

Contents **Page**

3.1 Chlorine Dioxide In Water Treatment 1
3.1.1 Chlorine Dioxide Applications 1
3.1.2 Bello Zon® Plant Technology 1

3.2 Performance Overview Of Chlorine Dioxide Systems 3

3.3 Questionnaire On The Design Of A Chlorine Dioxide Plant 4

3.4 Bello Zon® Chlorine Dioxide Plants Type Legio Zon® 5
3.4.1 Identcode Ordering System for Legio Zon® Systems 5
3.4.2 Accessories And Service Kits For CDL and Legio Zon® 6

3.5 Bello Zon® Chlorine Dioxide Plants Type CDVc 8
3.5.1 Identcode Ordering System For CDVc Plants 9
3.5.2 Spare Parts Kits For Bello Zon® Chlorine Dioxide Plants Type CDV 9

3.6 Bello Zon® Chlorine Dioxide Plants type CDKc 11
3.6.1 Identcode Ordering System for CDKc Plants 12
3.6.2 Spare parts kits for Bello Zon® chlorine dioxide systems type CDK 12

3.7 Bypass Line Accessories 14

3.8 Chemicals Supply Accessories 16

3.9 Safety Accessories And Analysis 18

3 Chlorine Dioxide Plants Bello Zon®

3.1 Chlorine Dioxide In Water Treatment

Chlorine dioxide is an extremely reactive gas, which – because of its instability – cannot be stored, and must only be produced in the required quantities in special plants on the site where it is to be used.

Chlorine dioxide offers a number of advantages for water disinfection compared with chlorine, the disinfectant mainly used. The disinfecting power of chlorine dioxide actually increases slightly with increasing pH, whereas with chlorine the disinfecting power reduces. Chlorine dioxide remains stable in the pipeline system over a long period and ensures microbiological protection of the water for many hours, or even several days. Ammonia and ammonium, which cause significant chlorine depletion, are not attacked by chlorine dioxide, so that the dosed chlorine dioxide is fully available for bactericidal action. Chlorophenols, compounds with intense odours, which can be produced during water chlorination in some circumstances, are not formed when chlorine dioxide is used. Trihalomethanes (THMs), a group of substances, which, like their best known example, chloroform, are suspected of being carcinogenic, are produced when chlorine reacts with natural water components (humic acids, fulvic acids, etc.). Measured THM concentrations, if present at all, are drastically reduced when chlorine dioxide is used as an alternative disinfectant.

Advantages of chlorine dioxide:

- Disinfection power is independent of pH.
- High residual effect thanks to long-term stability in the pipeline system.
- Reduction of the biofilm in pipelines and tanks, hence reliable protection of entire water systems against legionella contamination.
- No reaction with ammonia or ammonium.
- No formation of chorophenols and other intense odour compounds which can be produced in water chlorination.
- No formation of THMs and other chlorinated hydrocarbons, no increase in the AOX value.

3.1.1 Chlorine Dioxide Applications

For every new project, our engineers can draw on the experience that we have continually accumulated since 1976, in the following applications:

Municipal drinking water and waste water plants

- Disinfection of drinking water
- Disinfection of waste water

Hotels, hospitals, retirement homes, sports facilities, etc.

- Combating legionella in cold and hot water systems
- Water disinfection in air conditioning system cooling towers

Food and beverages industry

- Disinfection of product and industrial water
- Bottle cleaning, rinser and pasteuriser
- Cold sterile bottling
- Disinfectant in CIP systems
- Condensate water treatment in the milk industry
- Washing water treatment for fruit, vegetables, seafood, fish, and poultry

Horticulture

- Disinfection of irrigation water in plant growing

Industry

- Cooling water treatment
- Combating legionella in cooling circuits
- Disinfection of process water
- Removal of odorous substances in air scrubbers
- Combating slime in the paper industry

3 Chlorine Dioxide Plants Bello Zon®

3.1.2 Bello Zon® Plant Technology

Bello Zon® chlorine dioxide generating plants and metering systems work according to the chlorite/acid process. These plants generate a chlorine dioxide solution free of chlorine based on the reaction of sodium chlorite solution with hydrochloric acid.

Decades of experience with Bello Zon® chlorine dioxide plants have shown that an extraordinary yield of 90 to 95 % is achieved with the process parameters chosen (with reference to stoichiometric ratios).

In most applications, the metering is proportional to the flow, i.e. flow-dependent on the signal from an inductive or contact flow meter or parallel with a delivery pump.

In circulation systems, such as e.g. bottle washing machines, cooling circuits, where a chlorine dioxide loss has only to be supplemented, the addition can also be controlled via a chlorine dioxide measurement depending on the measured value.

Features

- Precise and reproducible chlorine dioxide production thanks to calibratable metering pumps for the initial chemicals.
- Ease of operation thanks to microprocessor control with display of all relevant operating parameters and error messages in full text.
- Display of the current production quantity as well as the flow rate of the connected flow meter for CDV and CDK.
- Integrated measurement of ClO_2 and chlorite as well as controlling of ClO_2.
- Highest level of safety provided as standard thanks to design and operation in accordance with DVGW specifications W 224 and W 624.

Bello Zon® CDL Legio Zon®

Ideal for small water quantities and for both continuous and discontinuous treatment: The specialist in combating legionella and other pathogens supplies up to 10 g/h. The complete system with integrated metering pump is simple and safe to use thanks to its chlorine dioxide concentration of 2 g/l. An easy to understand user interface with self-explanatory menu navigation makes it simple to operate.

Bello Zon® CDV

The ideal system for medium to large water quantities - for the production of 15 to 2,000 g/h of chlorine dioxide. The continuous treatment is safe and simple thanks to the use of diluted chemicals.

Bello Zon® CDK

This plant produces chlorine dioxide for large water quantities - 150 to 10,000 g/h. The continuous water treatment is particularly economic thanks to the use of concentrated chemicals.

ProMaqua provides all advice and support services needed for the safe use of a chlorine dioxide plant:

- Evaluation of the situation at site by trained, competent field sales staff.
- In our water laboratory, all important water parameters, which are required for an optimum plant design, can be analysed.
- Planning of the plant.
- Commissioning and plant service by our trained service technicians.

3 Chlorine Dioxide Plants Bello Zon®

3.2 Performance Overview Of Chlorine Dioxide Systems

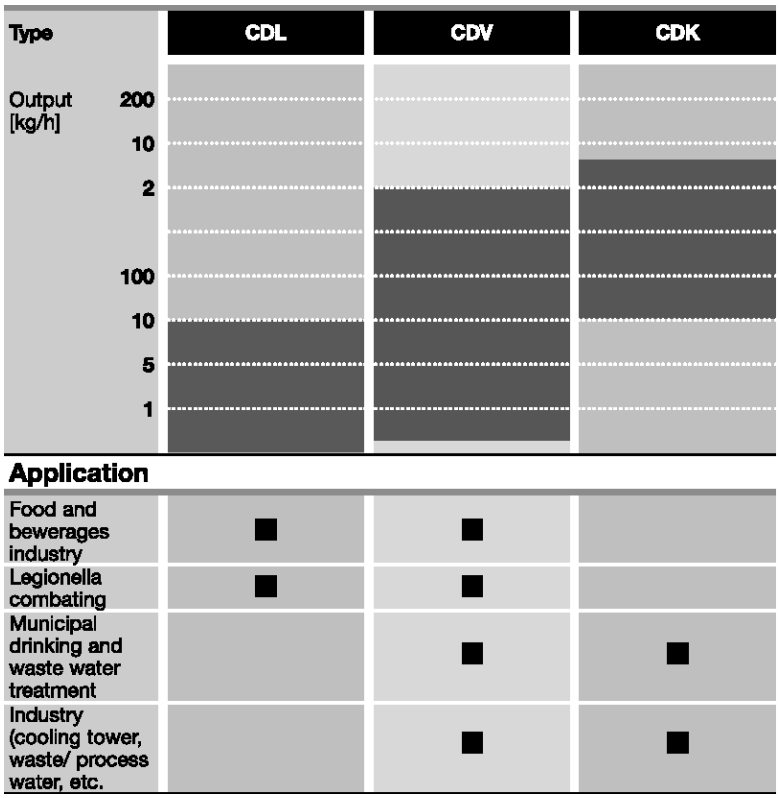

P_PMA_BEZ_0025_SW

Chlorine dioxide is establishing itself more and more as a universal disinfectant in applications such as disinfecting drinking water and industrial water, washing food or in the treatment of cooling water and waste water. Its effect independent of the pH value of the water ensures systems remain free of biofilms.

- Efficient disinfection in connection with best eco-compatibility
- Safe and reliable plant technology
- World-wide availability of know-how and service

3 Chlorine Dioxide Plants Bello Zon®

3.3 Questionnaire On The Design Of A Chlorine Dioxide Plant

Use of the chlorine dioxide plant:

☐ for disinfection of
- ☐ Drinking water
- ☐ Industrial water
- ☐ Process water in the food industry
- ☐ Waste water
- ☐ Cooling water
- ☐ _____

☐ for oxidation of
- ☐ Iron, manganese, nitrite, sulphide etc.
- ☐ Swimming pool water
- ☐ Odour
- ☐ _____

☐ _____

Water values:

Max. water flow rate	_____ m^3/h	Maximum water pressure	_____ bar
Water flow rate	☐ constant	☐ fluctuating from _____ m^3/h to _____ m^3/h	
pH value	_____	Iron (Fe^{2+})	_____ mg/l
Temperature	_____ °C	Manganese (Mn^{2+})	_____ mg/l
Solid fraction	_____ mg/l	Nitrite (NO_2^-)	_____ mg/l
Alkalinity $K_{S4,3}$	_____ mmol/l	Sulphide (S^{2-})	_____ mg/l
		TOC (total organic carbon)	_____ mg/l

Response time to application:

_____ m^3 volume reaction tank or _____ minutes residence time in entire system.

Type of metering:

☐ constant

☐ flow-proportional

☐ depending on measured value

Desired amount of metering: _____ mg/l

Desired concentration after chlorine dioxide metering: _____ mg/l

Other requirements:

_____

_____

_____

P_PMA_BEZ_0007_SW

3 Chlorine Dioxide Plants Bello Zon®

3.4 Bello Zon® Chlorine Dioxide Plants Type Legio Zon®

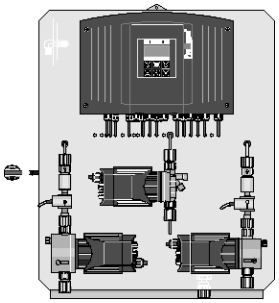

pk_7_075_V2
Legio Zon® (without cover)

The Bello Zon® plants Legio Zon® are fully pre-mounted and are delivered ready for connection. A stylish cover protects against incorrect operation. Legio Zon® has an integrated metering pump whose capacity is matched to system requirements.

- Generation of 0-10 g/h of chlorine dioxide in batch mode, equally suitable for both continuous and discontinuous operation
- High level of safety in accordance with DVGW specifications W 224 as well as W 624 and no hazardous operating conditions thanks to the optimum chlorine dioxide concentration (2 g/l)
- High stability of the generated chlorine dioxide solution lasting over several days
- High operational safety thanks to automatic restart following a mains failure, automatic monitoring functions and maintenance messages
- Controller with menu-guided operation, flushing and service functions

The following optional accessories are available

- Corrosion-resistant metering point with integrated mixing elements
- Pressure-retaining valve
- Drip pan for 1 chemicals container 25 l and 10 l each
- Photometer for determination of chlorine dioxide and chlorite
- Ready-to-use chemicals in 25 l or 10 l containers

Technical Data

Type	Dosing capacity	Max. operating pressure	Capacity of dosing pump ClO_2	Operating temp.	Dimensions (approx.) H x W x D (mm)	Weight (approx.)	Power consumption (max.)	
							230 V	110/115 V
	g/h	bar		°C	mm	kg	A	A
CDL5	0–5	10	3 l/h (10 bar) 3.4 l/h (5 bar) *	10–40	650 x 550 x 310	24	2.7	8.4
CDL10	0–10	7	7.1 l/h (7 bar) 8.4 l/h (3.5 bar) *	10–40	650 x 550 x 370	28	2.7	8.4

* Hose connection dimensions of ClO_2 output: 6 x 4 mm

Inputs:

Water meter (contact or frequency)

External digital input (can be configured for pause, shock dosage, high dosage or manual)

External fault

Outputs:

Operating alarm relay

Warning relay

Fault alarm relay

3 Chlorine Dioxide Plants Bello Zon®

3.4.1 Identcode Ordering System for Legio Zon® Systems

Chlorine dioxide systems type Legio Zon® CDLa

CDLa	System type								
	05	CDLa 5 = 5 g/h							
	10	CDLa 10 = 10 g/h							
		Application							
		0	With integrated metering pump						
		1	Without integrated metering pump						
			Version						
			P	ProMaqua					
			J	Japan					
			H	Switzerland (version conforming to SVGW)*					
			N	neutral					
				Power supply					
				0	230 V, 50/60 Hz				
				1	115 V, 50/60 Hz				
				3	100 V, 50/60 Hz (only Japan version)				
					Cover				
					1	With blue cover hood			
						Chlorine dioxide pump			
						0	None		
						1	With pump 1002		
							Injection lance		
							0	without suction lance	
							1	Lance for 10/25 l tank	
								Language	
								D	German
								E	English
								F	French
								I	Italian
								S	Spanish
								J	Japanese
								C	Czech

* Version pursuant to SVGW: diluent water connection G 3/4", pressure relief valve type MFV with wall bracket included in the scope of delivery.

3.4.2 Accessories And Service Kits For CDL and Legio Zon®

Metering station

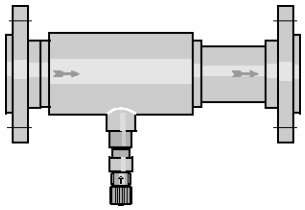

pk_7_066

Corrosion-resistant metering station made of PVC-U or PVC-C for warm water applications with integrated mixer elements and maintenance-free PVDF metering valve.

	Material	installation length mm	Order no.
Metering station CDL DN 50	PVC-U	450	1027611
Metering station CDL DN 65	PVC-U	400	1026490
Metering station CDL DN 80	PVC-U	400	1027612
Metering station CDL DN 100	PVC-U	470	1034693
Metering station CDL DN 65	PVC-C	400	1029326
Metering station CDL DN 80	PVC-C	400	1029327

Temperature/pressure resistance – metering station CDL

Water temperature (°C)	maximum permissible operating pressure (bar)	
	PVC-U	PVC-C
40	12	12
50	7	9.5
60	4.5	7.5
70	–	5
80	–	3

Pressure relief valve

Type MFV pressure relief valve with wall mounting bracket and 6x4 mm hose connection for installation in chlorine dioxide metering line.

	Order no.
Pressure relief valve MFV with wall mounting bracket	1027652

Safety collecting pan for chemical containers

Collecting Pan with two separate compartments for 1 No. 25 l Bello Zon® acid and 1 No. 10 l Bello Zon® chlorite chemical container.

Dimensions (HxWxD): 290 x 700 x 350 mm

	Order no.
Safety collecting pan for chemical container CDL	1026744

Service kits for Legio Zon®

The kits contain all parts subject to wear and tear that need to be replaced at regular service intervals. The 1-year kit should be used every year and the 3-year kit in addition every 3 years.

	Order no.
1-year service kit for Legio Zon®CDL5	1027263
3-year service kit for Legio Zon®CDL5	1027417
1-year service kit for Legio Zon®CDL10	1031549
3-year service kit for Legio Zon®CDL10	1031550
1-year service kit for pressure relief value	1029442

3 Chlorine Dioxide Plants Bello Zon®

3.5 Bello Zon® Chlorine Dioxide Plants Type CDVc

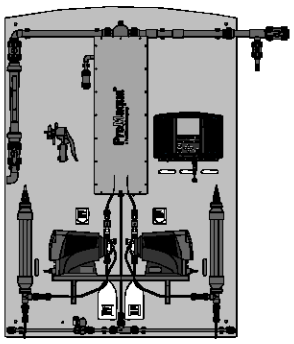

P_PMA_BEZ_0008_SW
CDVc 600-2000 (figure shows optional configuration)

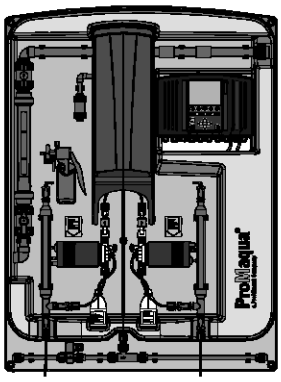

P_PMA_BEZ_0009_SW
CDVc 20-240 (figure shows optional configuration)

Complete chlorine dioxide systems Bello Zon® CDVc, wired ready for connection, are used for the production, metering and monitoring of 20 to 2,000 g/h of chlorine dioxide with diluted base chemicals. A completely newly developed reactor concept ensures the innovative production and metering of chlorine dioxide. Instead of the PVC hitherto used in the industry, PVDF is used for the first time. This results in higher operating safety and a better purity of the generated chlorine dioxide. The stroke lengths of the latest generation of ProMinent® metering pumps are monitored online. Hazardous operating statuses owing to incorrect operation of stroke length adjustment of the pumps can thus be avoided.

The precise production of chlorine dioxide is managed by the central plant control. Chlorine dioxide, chlorite, pH or redox potential sensors DULCOTEST® can be connected directly via the two mA inputs. The chlorine dioxide in the treated water, as well as its main by-product chlorite, can thus be monitored and documented online. Using the integrated PID controller, the chlorine dioxide concentrations in the water can be adjusted automatically depending on the measurement. All status messages and measured values are documented in the integrated data logger and visualised in the clear colour display via the screen recorder. Using the embedded web server, the user interface can be called up remotely including all of the values and messages shown on the display. All that is needed to view this is a browser, with no need for further software.

The plants meets all of the requirements of the DVGW guidelines W 224 and W 624 with regard to design and operation and are intended for operation with pre-diluted chemicals Bello Zon® chlorite (7.5 % $NaClO_2$) and acid (9 % HCl).

In the bypass version for storage module, the plants are designed for filling of intermediate storage tanks for ClO_2 solution. For this purpose, the plants include a water supply line consisting of a shut-off valve, prefilter, pressure reducer, solenoid valve (alternatively 230 V or 24 V), water meter and needle valve. The float flow meter integrated in the bypass line is designed for the low flow rate required to produce a stock solution of 500 - 2,000 ppm of ClO_2.

Advantages

- Efficient operation thanks to the production, metering, and monitoring of ClO_2 with only one system
- Maximum operating safety and purity of the ClO_2 generated with PVDF reactors
- Maximum operating safety thanks to stroke length-monitored pumps
- Perfect quality management thanks to integrated storage of all operating parameters and measured values
- Automatic monitoring of operating parameters and maintenance dates
- Easy and safe operation thanks to clear menu navigation in plain text

Features

- Capacity range: 20-2,000 g/h of ClO_2
- PVDF reactor
- Stroke length monitoring for metering pumps
- Control with large colour display, integrated data logger and screen recorder
- Measurement, documentation, and visualisation of ClO_2 and chlorite or redox potential

Technical Data

Type	Chlorine dioxide dosing capacity*		Max. operating pressure	Operating temp.	Hose connection dimensions of metering pumps	Dimensions*** H x W x D (mm)	Weight***	Power consumption (max.) *****	
	min.-max./ hour	min./ day						230 V	230 V
	g/h	g/d	bar	°C		mm	kg	A	A
CDVc 20	1–20	6.4	8	10–40	6x4	1,344 x 1,002 x 200	26	2.7	0.9
CDVc 45	2–45	16.0	8	10–40	6x4	1,344 x 1,002 x 200	27	2.7	0.9
CDVc 120	6–120	40.0	8	10–40	6x4	1,344 x 1,002 x 200	28	2.7	0.9
CDVc 240	12–240	80.0	8	10–40	8x5	1,342 x 1,000 x 248	45	2.7	1.2
CDVc 600	30–600	140.0	8	15–40	8x5	1,711 x 1,200 x 273	75	2.8	1.4
CDVc 2000	100–2,000	468.0	5	15–40	DN 10	1,900 x 1,400 x 370	120	4.1	3.2

* The metering figures refer to 5 bar backpressure and an ambient temperature of 20 °C. The minimum capacity/hour is based on the fact that when the plant is operating at below 5 % of the nominal capacity, continuous metering is no longer possible because of the then low pumping frequency of the metering pumps. When plants are not operating continuously, the reactor content must be changed at least twice a day. The stated minimum capacity/day should thus not be undershot.

** Suction height at 100 % stroke length

*** without bypass pump, flushing valve and water supply line

***** 230 V values with bypass pump, 115 V values without bypass pump

3 Chlorine Dioxide Plants Bello Zon®

3.5.1 Identcode Ordering System For CDVc Plants

CDVc	System type, metering output ClO_2														
	02	CDVc 20= 20 g/h													
	04	CDVc 45= 45 g/h													
	06	CDVc 120= 120 g/h													
	08	CDVc 240= 240 g/h													
	10	CDVc 600= 600 g/h													
	14	CDVc 2000= 2,000 g/h													
		Type													
		P	ProMaqua												
			Power supply												
			U	100-230 V ± 10 %, 50/60 Hz (for version without suctioning)											
			A	230 V ± 10 %, 50/60 Hz (for version with bypass 04)											
			B	100-115 V ± 10 %, 50/60 Hz (not available for version with „bypass“ 04 or 06)											
				Bypass version											
				00	without bypass										
				02	Bypass PVC-U with float flow meter										
				04	Bypass PVC-U with float flow meter and bypass pump (not CDVc 2000)										
				06	Bypass PVC-U for storage module with water supply 230 V (only CDVc 45-600)										
				07	Bypass PVC-U for storage module with water supply 24 V (only CDVc 45-600)										
					Suction unit										
					0	without reactor housing with suctioning, without calibrating device, but with measuring cylinder									
					1	without reactor housing with suctioning, with calibrating device									
					2	with reactor housing with suctioning, without calibrating device, with measuring cylinder (only in version operating voltage A or B).									
					3	with reactor housing with suctioning, with calibrating device									
						Suction lance, suction fitting, chemicals									
						0	none								
						1	Suction lance for 5-60 l container (only CDV 20-600)								
						2	Suction lance for 200 l container (only CDV 20-600)								
						3	Flexible suction fitting up to 5m with two-phase level switch (only CDV 20-600 g/h)								
						4	Suction lance for 25 l tank with 2 drip pans 40 l without leakage sensor (only CDV 20-600 g/h)								
							Mechanical design								
							0	Standard							
								Preset language							
								DE	German						
								EN	English						
								FR	French						
								IT	Italian						
								ES	Spanish						
									Control						
									0	Basic version					
									1	With measuring and control properties (only in connection with version inputs and outputs 1 or 3)					
									2	With measuring and control properties, data logger and screen recorder (only in connection with version inputs and outputs 1 or 3)					
										Extended in- and outputs					
										0	none				
										1	2 analogue inputs, freely configurable for controller output and flow rate				
										2	1 analogue output, freely configurable				
										3	2 analogue inputs and 1 analogue output, freely configurable				
											Communication interfaces				
											0	None			
											1	LAN interface, embedded web server			
												Approvals			
												01	CE-mark		
													Temperature monitoring		
													0	without temperature monitoring	
														Hardware	
														0	Standard
															Software
															0 Standard

3 Chlorine Dioxide Plants Bello Zon®

3.5.2 Spare Parts Kits For Bello Zon® Chlorine Dioxide Plants Type CDV

The spare parts kits include all parts subject to wear, which are to be replaced in the course of regular maintenance.

Replacement part kit for CDVc plants

	Order no.
Replacement part kit compl. CDVc 20	1034758
Replacement part kit compl. CDVc 45	1034759
Replacement part kit compl. CDVc 120	1034760
Replacement part kit compl. CDVc 240	1034761
Replacement part kit compl. CDVc 600	1034762
Replacement part kit compl. CDVc 2000	1034763

Spare parts kits for CDVb plants

	Order no.
Spare parts kit compl. CDVb 15	1022252
Spare parts kit compl. CDVb 35	1022253
Spare parts kit compl. CDVb 60	1022264
Spare parts kit compl. CDVb 120	1022265
Spare parts kit compl. CDVb 220	1024614

Spare parts kits for CDVa plants

	Order no.
Spare parts kit compl. 230 V CDVa 35	791842
Spare parts kit compl. 230 V CDVa 60	791913
Spare parts kit compl. 230 V CDVa 120	791915
Spare parts kit compl. 230 V CDVa 220	740824
Spare parts kit compl. 230 V CDVa 400	740765
Spare parts kit compl. 230 V CDVa 600	740826
Spare parts kit compl. 230 V CDVa 2000	1005333
Spare parts kit compl. 115 V CDVa 35	791860
Spare parts kit compl. 115 V CDVa 60	791914
Spare parts kit compl. 115 V CDVa 120	791916
Spare parts kit compl. 115 V CDVa 220	740825
Spare parts kit compl. 115 V CDVa 400	740819
Spare parts kit compl. 115 V CDVa 600	740827
Spare parts kit compl. 115 V CDVa 2000	1005344

Additional spare parts are listed in the operation instructions for the plants.

3 Chlorine Dioxide Plants Bello Zon®

3.6 Bello Zon® Chlorine Dioxide Plants type CDKc

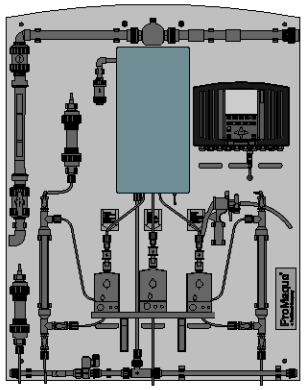

P_PMA_BEZ_0023_SW

CDKc 420 (figure shows optional configuration)

Chlorine dioxide systems Belllo Zon® CDKc, wired ready for connection, are used for the production, metering and monitoring of 170 to 7,500 g/h of chlorine dioxide with concentrated base chemicals. A completely newly developed reactor concept ensures the innovative production and metering of chlorine dioxide. Instead of the PVC hitherto used in the industry, PVDF is used for the first time. This results in higher operating safety and a better purity of the generated chlorine dioxide. The stroke lengths of the latest generation ProMinent® metering pumps are monitored online. Hazardous operating statuses owing to incorrect operation of stroke length adjustment of the pumps can thus be avoided.

The precise production of chlorine dioxide is managed by the central plant control. Chlorine dioxide, chlorite, pH or redox potential sensors DULCOTEST® can be connected directly via the two mA inputs. The chlorine dioxide in the treated water, as well as its main by-product chlorite, can thus be monitored and documented online. Using the integrated PID controller, the chlorine dioxide concentrations in the water can be adjusted automatically depending on the measurement. All status messages and measured values are documented in the integrated data logger and visualised in the clear colour display via the screen recorder. Using the embedded web server, the user interface can be called up remotely including all of the values and messages shown on the display. All that is needed to view this is a browser, with no need for further software.

The plants meet all the requirements of the DVGW specifications W 224 and W 624 with regard to design and operation and are designed for operation with sodium chlorite 24.5 % in accordance with DIN EN 938 and hydrochloric acid 30…33 % in accordance with DIN EN 939.

In the bypass version for storage module, the plants are designed for filling of intermediate storage tanks for ClO_2 solution. For this purpose, the plants include a water supply line consisting of a shut-off valve, prefilter, pressure reducer, solenoid valve (alternatively 230 V or 24 V), water meter and needle valve. The float flow meter integrated in the bypass line is designed for the low flow rate required to produce a stock solution of 500 - 2,000 ppm of ClO_2.

Advantages

- Efficient operation thanks to production, metering, and monitoring of ClO_2 with only one plant
- Highest operating safety and purity of the produced ClO_2 thanks to PVDF reactors
- Highest operating safety thanks to stroke length-monitored pumps
- Perfect quality management thanks to integrated storage of all operating parameters and measured values
- Automatic monitoring of operating parameters and maintenance dates
- Easy and safe operation thanks to clear menu navigation with full text

Features

- Capacity range: 170-7,500 g/h ClO_2
- PVDF reactor
- Stroke length monitoring for metering pumps
- Control with large colour display, integrated data logger and screen recorder
- Measurement, documentation, and visualisation of ClO_2, chlorite or redox potential

Technical Data

Type	Chlorine dioxide dosing capacity*		Max. operating pressure	Connection dimensions of chlorite and acid metering pumps	Operating temp.	Dimensions** H x W x D (mm)	Weight**	Power consumption (max.) ***	
	min.-max./ hour	min./ day						115 V	115 V
	g/h	g/d	bar		°C	mm	kg	A	A
CDKc 170	9-170	56	8	6x4	10–40	1,384 x 1,080 x 325	55	2.7	1.2
CDKc 420	21-420	140	8	8x5	10–40	1,700 x 1,100 x 450	80	2.8	1.5
CDKc 900	45-900	300	8	8x5	10–40	2,000 x 1,130 x 510	95	2.9	2.5
CDKc 2100	105-2,100	700	5	8x5	10–40	2,000 x 1,320 x 550	160	2.2	3.5
CDKc 3000	150-3,000	700	5	8x5	15–40	2,000 x 1,320 x 550	160	2.2	3.5
CDKc 7500	375-7,500	1,750	3	DN 10	15–40	2,300 x 1,500 x 560	175	2.6	4.5

* The metering figures relate to 5 or 2 bar back pressure and an ambient temperature of 20 °C. The minimum capacity/per hour is based on the fact that when the plant is operating at below 5 % of the nominal capacity, continuous metering is no longer possible, due to the then low pumping frequency of the metering pumps. When plants are not operating continuously, the reactor contents must be changed at least twice a day. The plant should not, therefore, be operated below the stated minimum capacity/day.

** without bypass pump, flushing valve and water supply line

*** 230 V figure with bypass pump (CDKc 170-900), 115 V figures without bypass pump

3 Chlorine Dioxide Plants Bello Zon®

3.6.1 Identcode Ordering System for CDKc Plants

CDKc	Metering rate of ClO_2														
	02	CDKc 170 = 170 g/h													
	04	CDKc 420 = 420 g/h													
	06	CDKc 900 = 900 g/h													
	08	CDKc 2100 = 2100 g/h													
	10	CDKc 3000 = 3000 g/h													
	12	CDKc 7500 = 7500 g/h													
		Version													
		P	ProMaqua												
			Operating voltage												
			A	230 V ±10 %, 50/60 Hz (for version with bypass 04)											
			B	100-115 V ±10 %, 50/60 Hz (not available for version with bypass 04 or 06)											
				Bypass version, bypass monitoring											
				00	Without Bypass										
				02	Bypass PVC-U with float flow meter										
				04	Bypass PVC-U with float flow meter and pump (VA) only with 230 V operating voltage (only with CDKc 170-900 g/h)										
				06	Bypass PVC-U for storage module with water supply 230 V (only with CDKc 170-900 g/h)										
				07	Bypass PVC-U for storage module with water supply 24 V (only with CDKc 170-900 g/h)										
					Suction unit										
					1	without reactor housing with suctioning, without calibrating device									
					3	with reactor housing with suctioning, without calibrating device									
						Suction lance, suction fitting for chemicals									
						0	without								
						2	Suction lance for 200 l container								
						3	Flexible suction assembly 5 m								
							Mechanical design								
							0	Standard							
								Preset language							
								DE	German						
								EN	English						
								FR	French						
								IT	Italian						
								ES	Spanish						
									Control						
									0	Basic version					
									1	With measuring and control properties (only in connection with version inputs and outputs 1 or 3)					
									2	With measuring and control properties, data logger and screen recorder (only in connection with version inputs and outputs 1 or 3)					
										Extended in- and outputs					
										0	without				
										1	2 analogue inputs, freely configurable for controller output and flow rate				
										2	1 analogue output, freely configurable				
										3	2 analogue inputs and 1 analogue output, freely configurable				
											Communication interfaces				
											0	None			
											1	LAN interface, embedded web server			
												Approvals			
												01	CE mark		
													Temperature monitoring		
													0	without temperature monitoring	
														Hardware	
														0	Standard
															Software
															0 Standard

3 Chlorine Dioxide Plants Bello Zon®

3.6.2 Spare parts kits for Bello Zon® chlorine dioxide systems type CDK

The spare parts kits include all wearing parts that need replacing in the course of regular maintenance.

	Order no.
Spare parts kit compl. 230 V CDKa 150	740740
Spare parts kit compl. 230 V CDKa 420	740743
Spare parts kit compl. 230 V CDKa 750	1000172
Spare parts kit compl. 230 V CDKa 1500	1000856
Spare parts kit compl. 230 V CDKa 6000	1004814
Spare parts kit compl. 230 V CDKa 10000	1006647
Spare parts kit compl. 115 V CDKa 150	740741
Spare parts kit compl. 115 V CDKa 420	740744
Spare parts kit compl. 115 V CDKa 750	1000173
Spare parts kit compl. 115 V CDKa 1500	1000855
Spare parts kit compl. 115 V CDKa 6000	1004815
Spare parts kit compl. CDKc 170	1036454
Spare parts kit compl. CDKc 420	1036455
Spare parts kit compl. CDKc 900	1036456
Spare parts kit compl. CDKc 2100	1036457
Spare parts kit compl. CDKc 3000	1036458
Spare parts kit compl. CDKc 7500	1036459

Additional spare parts are listed in the operation instructions for the systems.

3 Chlorine Dioxide Plants Bello Zon®

3.7 Bypass Line Accessories

Premixers made from PVC

The premixers of Types CDVb 15-120 are fully integrated in the plant, provided they were ordered by Identity Code. The premixer on the CDVb 220 can also be ordered by Identity Code, but is supplied loose with the plant. On all other plants, the premixer can be ordered partly by Identity Code or partly as a separate order. The standard delivery package of the premixer includes all PVC couplings, screw hose clips and other fixing materials. On the CDVa 2000 and CDKa 1500–10000, the pre-mixer is in two parts.

Plant	Volume	Length	Connection nominal diameter	Order no.
	l	mm		
CDVb 220, CDKa 150	1.5	594	DN 25	740649
CDVa 400, CDKa 420	4.5	756	DN 25	740650
CDVa 600, CDKa 750	7.0	1,306	DN 32	740832
CDVa 2000, CDKa 1500	13.4	2x1,316	DN 40	1001000
CDKa 6000/10000	13.4	2x1,330	DN 50	1003121

Bypass pump

Booster pumps made of cast iron (GG) or stainless steel (SS) for operation in the bypass line. Electrical version 220-230 V, 50 Hz, with integrated overload protection.

The required bypass flow should be considered when selecting a suitable bypass pump. The following flow data is recommended for the different plants:

Plant type	Bypass line	Diameter (mm)	Flow rate (m3/h)
CDV 15 – 600	DN 25	32	0.5 - 2
CDV 2000	DN 40	50	2 - 10
CDKa 150 – 420	DN 25	32	0.5 - 2
CDKa 750	DN 32	40	1 - 3.5
CDKa 1500	DN 40	50	1.5 - 10
CDKa 6000 – 10000	DN 50	63	6 - 10
CDKc 170 - 900	DN 25	32	0.5 - 2
CDKc 2100 - 3000	DN 40	50	2 - 10
CDKc 7500	DN 40	50	6 - 10

PVC should be used as the material for the bypass. The thickness should at least correspond to the pressure range PN 10, or even better PN 16 (bar).

Technical Data

Type	Material	Connection suction/discharge side	Pump capacity at 2 bar	Nominal rating	Nominal current	Order no.
		inch	m^3/h	W	A	
ZHM 3	SS	RP 1¼" / 1"	1.2	500	2.3	1038925

Accessories

	Order no.
Bracket for bypass pump	791474
Angle-seat valve PVC DN 25 for throttling the bypass pump	1001877

3 Chlorine Dioxide Plants Bello Zon®

Flushing assembly

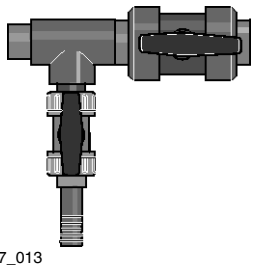

pk_7_013
Flushing assembly

To allow the reactor and premixer to be flushed clear for maintenance purposes or after a long shutdown period, a flushing valve must be installed downstream of the chlorine dioxide plant. The complete flushing assembly consists of a DN 25 PVC shut-off valve and a DN 20 PVC flushing valve with hose grommet. It is already included in the scope of delivery of all new plants as standard.

	Order no.
Flushing assembly PVC-U, EPDM, DN 25	1033405

Ball-check valve

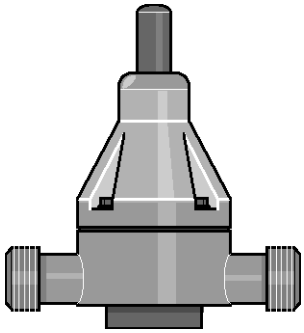

pk_2_031_1
Ball-check valve

On installations with long bypass lines, especially if the pipe slopes downwards and the dosing point is below the Bello Zon® plant, as well as on installations with fluctuating back pressure, a back pressure resistant ball-check valve must be fitted.

Type	Nominal diameter	Connector	Material	Order no.
DHV-RM	DN 15	G 1 1/2"	PVC (PC1)	1037766
DHV-RM	DN 20	G 2"	PVC (PC1)	1037284
DHV-RM	DN 20	G 2 1/4"	PVC (PC1)	1038147
DHV-RM	2	–	–	on request

Vent valve

PVC-U bleed valve for bypass line as a vacuum breaker to prevent uncontrolled siphoning of the chemicals when the bypass line is under vacuum. Opening pressure approx. -0.5 bar.

	Order no.
Vent valve B 895 d32 DN 25	1001260

PVC-U chlorine dioxide dosing point

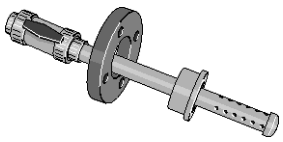

pk_7_011_2
Injection pipe from DN 100

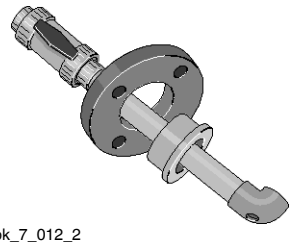

pk_7_012_2
Injection pipe to DN 80

For uniform distribution of the chlorine-enriched bypass water in the main water pipeline, an injection pipe must be used to optimise the mixing and distribution of the chlorine dioxide. The injection pipes must be shortened to the required length on site. The standard delivery package includes a DN 25 ball valve as a shut-off valve. The injection pipe is fitted in a DN 50 DIN flange installed by a third party.

	Order no.
Injection pipe for pipe diameters up to DN 80	1018754
Injection pipe for pipe diameters from DN 100	1018753

3 Chlorine Dioxide Plants Bello Zon®

3.8 Chemicals Supply Accessories

Suction lances and accessories

Suction lances here have a rigid construction that can be precisely matched to the chemicals container. Suction assemblies consist of flexible suction pipes. All suction lances and suction assemblies are made of PVC with FPM seals and are fitted with foot valves and two-stage level switches including cable and round plug. Relevant parts must be selected from the ProMinent motorised pump accessories range for system types not listed here.

	suitable for system types	Order no.
Suction lance for connection to 5-60 litre non-reusable containers with 2 m long suction hose (6/4 mm)	CDVc 20-120	802077
Suction lance for connection to 5-60 litre non-reusable containers with 2 m long suction hose (8/5 mm)	CDVc 240-600	802078
Suction lance for connection to 200 litre drums with 3 m long suction hose (6/4 mm)	CDVc 20-120	802079
Suction lance for connection to 200 litre drums with 3 m long suction hose (8/5 mm)	CDVc 240-600	802080
Flexible suction fitting with D55 screw cap and 5 m suction hose (6/4mm)	CDVc 20-120	1034602
Flexible suction fitting with D55 screw cap and 5 m suction hose (8/5 mm)	CDVc 240-600	1034644
Gas-tight suction lance for 200 litre drums with bleed valve, connection for 6/4 and 8/5 mm suction lines and connector for 6/4 mm return line.	CDKc 170-3.000	1036171
Flexible suction assembly with 5 m suction hose (6/4 mm) and gas-tight D55 screw cap with opening for a return line	CDKc 170-3.000	1036174
Flexible suction assembly with 5 m suction hose (8/5 mm) and gas-tight D55 screw cap with opening for a return line	CDKc 170-3.000	1036175

Vacuum cylinder chamber for CDVa and CDVb plants

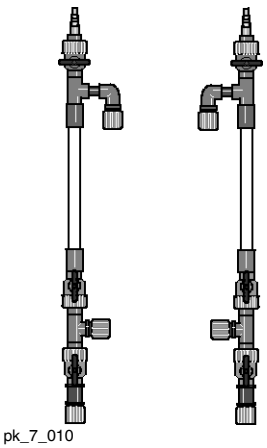

pk_7_010

To prevent gas bubbles in the suction line of the chemicals.

The CDVc plants in the version "with calibration device" already include the function "Suction aid".

	Order no.
Acid side: vacuum cylinder accumulator with fixings	1001820
Chlorite side: vacuum cylinder accumulator with fixings	1001821

Heating system for chemical lines

to preheat the chemical suction lines at low temperature

	Order no.
Diameter suction hose 6/4 mm	1001636
Diameter suction hose 8/5 mm	1001637
Diameter suction hose 12/9 mm	1001638
Diameter suction hose 19/16 mm	1001639

3 Chlorine Dioxide Plants Bello Zon®

Safety collecting pans for chemicals containers

Usable capacity l	Type	Order no.
40	without leakage monitor	791726
40	with leakage monitor	791728
70	without leakage monitor	740309
70	with leakage monitor	740308
140	without leakage monitor	740723
140	with leakage monitor	1003190

Scope of delivery:

- without leakage monitor: one pan
- with leakage monitor: two pans + level switch + electronics card for Bello Zon®control (CDVa, CDVb, CDKa)

Leakage monitor for CDVc and CDKc plants

Name of the item	Order no.
Level switch with litz wire 5 m	1003191

consisting of 1 level switch to be fitted in the 40, 70 or 140 l safety drip pans without leakage monitor and connected to the control of the Bello Zon® CDVc and CDKc.

Drip pan with grating to install two 200 l barrels

Material	Weight	External dimension WxDxH	Effective area WxD	Collecting volume
	kg	mm	mm	l
Polyethylene	ca. 22	1,230 x 820 x 435	1,160 x 750	220

Meets the requirements of the German Water Resources Act (WHG) and possesses a general building supervision approval of DIBt, Berlin.

Name of the item	Order no.
Drip pan with grating	1027211

Bello Zon® Acid

Component 1 for Bello Zon® chlorine dioxide production plants.

Name of the item	Order no.
Bello Zon® Acid 25 l	1027594
Bello Zon® Acid 200 l	950131
Bello Zon® Acid 500 l*	950132

* loan container

Bello Zon® Chlorite

Component 2 for Bello Zon® chlorine dioxide production plants.

Name of the item	Order no.
Bello Zon® Chlorite 10 l	1026422
Bello Zon® Chlorite 25 l	1027595
Bello Zon® Chlorite 200 l	950136
Bello Zon® Chlorite 500 l*	950137

* loan container

3 Chlorine Dioxide Plants Bello Zon®

3.9 Safety Accessories And Analysis



pk_7_004_1
Gas warning devices GMA 36

Gas warning device GMA 36 – chlorine dioxide

The gas warning device Type GMA 36 for chlorine dioxide is designed as a compact measurement and switching unit for monitoring the surrounding air for dangerous concentrations of chlorine dioxide.

Technical Data

Type	Chlorine dioxide
Warning at approx.	0.1 ppm/vol%
Alarm at approx.	0.3 ppm/vol%
Permissible ambient temperature	-15…45°C
Protection class housing	IP 54
Dimensions (without PGs, without sensor) H x W x D	247 x 135 x 95 mm
Supply	85 – 264 / 50 – 60 V/Hz
Power consumption	5 W
Warm-up phase max.	150 s
Relay contact "Warning", self-resetting	230 / 1 V/A
Relay contact "Alarm", latching	230 / 1 V/A
Relay contact "Horn", latching, can be acknowledged	230 / 1 V/A
Sensor measuring principle	electrochemical
Sensor service life (depending on environmental cond.)	2–3 Years

Note: The sensor responds to all oxidising gases

	Order no.
Gas warning device GMA 36 – chlorine dioxide	1023156

Spare parts

		Order no.
Replacement sensor	for chlorine, chlorine dioxide, ozone	1023314
Replacement sensor	for gas warning devices in the Life CGM range	1003009

Warning label in accordance with Safety Rules for chlorine dioxide

“Chlorination of water”, Appendix 3 Sheet 3, soft PVC film, yellow/black, 300 x 200 mm, self-adhesive.

	Order no.
Warning label	607320

Acid fume separator

Acid fume separator SDA-90 filled with 0.7 l of acid-absorbing granules for absorption of hydrochloric acid fumes. Connection: DN 25 PP coupling withG 1/2“ union nut.

	Order no.
Acid fume separator	1009987
Replacement pack of absorbent material 0.7 l	1010500

Reactor chamber vent valve

Vent valve for reactor space, adjustable, instead of vent line, which is led to open air (already included in standard delivery package on CDVb).

	Order no.
Reactor chamber vent valve	791801

Safety collecting pans for the chemicals containers, see Chap. 3.6

Photometers DT1, DT2 and DT4

- portable, compact photometer
- simple operation with text support
- safe, simple measurement of chlorine, chlorine dioxide, fluoride, chlorite, H_2O_2, bromine, ozone, pH and cyanuric acid
- calibratable

Technical Data

Ranges DT1	0.05 … 6.0 mg/l free chlorine (DPD1) +total chlorine (DPD1+3) 0.1 … 13.0 mg/l bromine (DPD1) 0.05 … 11 mg/l chlorine dioxide (DPD1) 0.03 … 4.0 mg/l ozone (DPD4) 6.5 … 8.4 pH (phenol red) 1 … 80 mg/l cyanuric acid
Ranges DT2B	0.05 … 2.0 mg/l fluoride 0.05 … 6.0 mg/l free chlorine and total chlorine 0.05 … 11.0 mg/l chlorine dioxide
Ranges DT4	0.03 … 2.5 mg/l chlorite 0.05 … 11 mg/l chlorine dioxide 0.05 … 6 mg/l chlorine
Measuring tolerance	Dependant upon measured value and measuring method
Battery	9 V battery (approx. 600 x 4-minute measurement cycles)
Permissible ambient temperature	5…40 °C
Relative humidity	30 … 90 % (non-condensing)
Material	Housing material: ABS Keypad: Polycarbonate
Dimensions L x W x H (mm)	190 x 110 x 55
Weight	0.4 kg



pk_5_021
Photometer

		Order no.
Photometer DT1	complete with carrying case	1003473
Photometer DT2B	complete with carrying case	1010394
Photometer DT4	complete with carrying case	1022736

The standard delivery package for the photometers includes accessories, cuvettes and reagents

3 Chlorine Dioxide Plants Bello Zon®

Consumables for analysis

	Order no.
DPD 1 buffer, 15 ml	1002857
DPD 1 reagent, 15 ml	1002858
DPD 3 solution, 15 ml	1002859
Phenol red tablets R 175 (100 in each)	305532
Cyanuric acid tablets R 263 (100 in each)	305531
SPADNS reagent, 250 ml for fluoride detection	1010381
Calibration standard fluoride 1 mg/l for calibration of photometer (fluoride detection)	1010382
3 off spare cells: round cells with covers for DPD phenol red and cyanuric acid detection (DT1 and DT2B)	1007566
3 off spare cells for fluoride detection (DT2A and B)	1010396
DPD reagents set, 15 ml each: 3 x DPD 1 buffer, 1 x DPD 1 reagent, s2 x DPD 3 solution	1007567
Chlorine dioxide tablets Nr. 1 R 127	501317
Chlorine dioxide tablets Nr. 2 R 128	501318

DPD reagents for measurement of excess chlorine, ozone or chlorine dioxide in the water, in conjunction with a Lovibond comparator.

	Amount	Order no.
DPD tablets No. 1	100	501319
DPD tablets No. 2	100	501320
DPD tablets No. 3	100	501321
DPD tablets No. 4	100	501322

4 Electrolysis Plants CHLORINSITU®

Contents		Page
4.1	Electrolysis Plants CHLORINSITU®	1
4.2	Performance Overview	2
4.3	Questionnaire on the design of an electrolysis plant	3
4.4	Tubular Cell Electrolysis Plants CHLORINSITU® II	4
4.5	Membrane Electrolysis Plants CHLORINSITU® III	5
4.6	Membrane Electrolysis Plants CHLORINSITU® IV compact	6
4.7	Membrane Electrolysis Plants CHLORINSITU® IV	7
4.8	Membrane Electrolysis Plants CHLORINSITU® IV plus	8
4.9	Gas Warning Device For Monitoring For Chlorine Gas	10

4 Electrolysis Plants CHLORINSITU®

4.1 Electrolysis Plants CHLORINSITU®

In electrolysis, chlorine and sodium hydroxide are produced on site by passing an electric current through salt water.

With tubular cell electrolysis (types CHLORINSITU® II), the electrochemical reaction takes place in one chamber, so that the chlorine gas produced immediately reacts with sodium hydroxide to form sodium hypochlorite. A saturated brine is used as saline solution which is produced in a separate salt dissolving tank from salt of a predefined quality. The advantage of tubular cell electrolysis lies in the simple design of the equipment. The disadvantage is the relatively poor yield which leads to a high entrainment of chloride in the water to be treated and the relatively low chlorine concentrations in the reaction mixture.

In membrane electrolysis, the electrochemical reaction takes place in two electrode chambers separated by a membrane, so that the formation of the chlorine and sodium hydroxide is physically separated. CHLORINSITU® III systems bring the reaction mixtures of both electrode chambers together again after the electrochemical reaction to produce a stock solution of sodium hypochlorite which can be stored intermediately and metered as needed. With the CHLORINSITU® IV compact and CHLORINSITU® IV systems, the chlorine is transferred directly into the water to be treated where it dissolves as hypochloric acid. In CHLORINSITU® IV plus systems, excess chlorine gas produced is bound to the sodium hydroxide solution and stored temporarily as sodium hypochlorite, similarly as with the CHLORINSITU® III system. This means that the systems need only be designed for medium chlorine demand because capacity peaks can be compensated from the intermediate storage. With all CHLORINSITU® IV systems, the sodium hydroxide solution is temporarily stored and metered, as required, to correct the pH.

The advantage of membrane systems is their excellent efficiency and the prevention of entrainment of chloride from the electrolytic cell to the water to be treated. In plants for the production of sodium hypochlorite, the high yield results in solutions that have a significantly higher chlorine content than when produced by tubular cell electrolysis.

- Disinfection using natural sodium chloride
- No handling of hazardous chemicals
- Economical method thanks to minimal consumption of salt and power
- Ultra-pure chlorine thanks to production on site and short temporary storage periods
- Chlorine generation and pH correction with one system (CHLORINSITU® IV)
- Maximum operating safety thanks to design as vacuum systems
- Improved working conditions for operating personnel
- No risk of confusing hazardous chemical containers

4 Electrolysis Plants CHLORINSITU®

4.2 Performance Overview

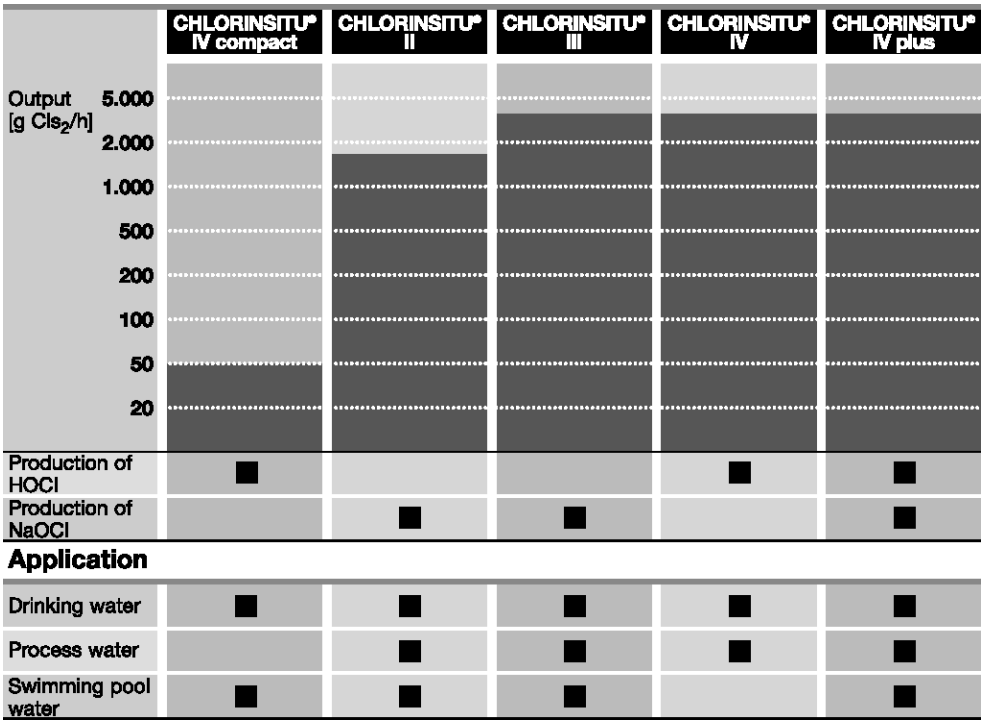

P_PMA_EL_0008_SW

4 Electrolysis Plants CHLORINSITU®

4.3 Questionnaire on the design of an electrolysis plant

Use of the electrolysis plant:

☐ for disinfection of

☐ Drinking water

☐ Industrial water

☐ Cooling water

☐ Swimming pool water

☐ _____

Water values:

Max. water flow rate	_____ m^3/h	Maximum water pressure	_____ bar
Water flow rate	☐ constant	☐ fluctuating from	_____ m^3/h to _____ m^3/h
pH value	_____	Iron (Fe^{2+})	_____ mg/l
Temperature	_____ °C	Manganese (Mn^{2+})	_____ mg/l
Solid fraction	_____ mg/l	Nitrite (NO_2^-)	_____ mg/l
Acid capacity $K_{S4,3}$	_____ mmol/l	Sulphide (S^{2-})	_____ mg/l
Total hardness	_____ mmol/l	TOC (total organic carbon)	_____ mg/l
Total hardness	_____ °dH	Ammonia	_____ mg/l

Response time to application:

_____ m^3 volume reaction tank or _____ minutes residence time in entire system.

Type of metering:

☐ constant

☐ flow-proportional

☐ depending on measured value

Desired dosing rate: _____ mg/l

Disinfection method used up to now:

_____

Consumption of disinfectant up to now: _____ kg/week

Other requirements:

_____

_____

_____

P_PMA_EL_0001_SW

4 Electrolysis Plants CHLORINSITU®

4.4 Tubular Cell Electrolysis Plants CHLORINSITU® II

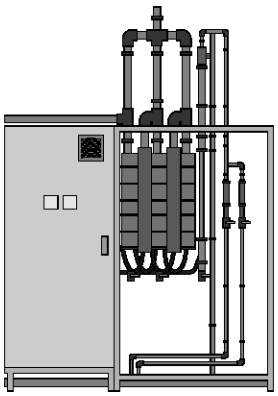

P_PMA_EL_0003_SW

Electrolysis systems of the CHLORINSITU® II series generate sodium-calcium hypochlorite with a concentration of 5 g/l. For this purpose, a saturated solution of sodium chloride is produced in a salt dissolving tank included with the delivery that is then electrolysed in an open cell after corresponding dilution. The resulting solution is collected in a storage tank and, from there, metered with separate metering pumps as needed. Because of the moderate pH value of approx. 8.5 to 9, the pH value of the treated water is significantly less affected than when using commercially available sodium-calcium hypochlorite (pH 12-13.5). The hydrogen produced is then diluted with fresh air using an ATEX-approved ventilator and is dissipated harmlessly. Both the salt-dissolving and the diluent water come from a softener integrated in the system. Thus, lime deposits can be prevented and the long service life of the electrolytic cell can be ensured.

The systems are controlled with a modern PLC with a large, illuminated display and integrated modem for remote diagnosis and troubleshooting.

Electrolysis systems of the CHLORINSITU® II series are specifically suitable for applications where a robust and clearly laid-out technology is required, and where the entrainment of sodium chloride into the water to be treated is not problematic.

- Robust, simple technology
- Compact, space-saving design
- Safe system control with remote diagnosis by modem
- Cost-effective operation thanks to the use of sodium chloride as an inexpensive raw material and lower chemical consumption for pH correction
- Improved working conditions for operating personnel
- No risk of confusing hazardous chemical containers

Technical Data

Type/ output	Voltage supply	Power Uptake	Salt consumption	Process water consumption	Cooling water consumption	Dimensions L x W x H (mm)	Brine tank	Recommended capacity storage tank
g/h		kW	kg/h	l/h	l/h		l	l
50	3 x 400 V	0.78	0.2	11.0	–	1,050 x 600 x 1,550	80	300
100	3 x 400 V	1.15	0.4	22.0	–	1,050 x 600 x 1,550	80	500
150	3 x 400 V	1.53	0.6	32.0	–	1,050 x 600 x 1,550	200	700
200	3 x 400 V	1.90	0.8	43.0	–	1,050 x 600 x 1,550	200	1000
300	3 x 400 V	2.65	1.1	65.0	–	1,050 x 600 x 1,550	200	1500
400	3 x 400 V	3.40	1.5	86.0	–	1,500 x 800 x 2,000	200	2000
500	3 x 400 V	4.15	1.9	108.0	–	1,500 x 800 x 2,000	380	2500
600	3 x 400 V	4.90	2.3	129.0	–	1,500 x 800 x 2,000	380	3000
800	3 x 400 V	6.40	3.0	172.0	–	1,500 x 800 x 2,000	380	3500
1000	3 x 400 V	7.90	3.8	215.0	–	1,500 x 800 x 2,000	520	4500
1200	3 x 400 V	9.40	4.6	258.0	–	1,500 x 800 x 2,000	520	5500
1400	3 x 400 V	10.90	5.3	301.0	–	1,500 x 800 x 2,000	520	6000
1600	3 x 400 V	12.40	6.1	344.0	–	1,500 x 800 x 2,000	520	7000

Scope of delivery:

Electrolysis system, mounted ready for operation on a powder coated stainless steel frame with programmable logic controller (PLC) in a control cabinet, integrated softener, electrolytic cell, ATEX-certified bleeding system and separate salt-dissolving tank with level monitor. Level sensors to monitor the storage tanks for the sodium-calcium hypochlorite to be provided by the customer. Automatic monitoring of water hardness downstream of the softener system and chlorine gas detector for systems from 600 g/h.

4 Electrolysis Plants CHLORINSITU®

4.5 Membrane Electrolysis Plants CHLORINSITU® III

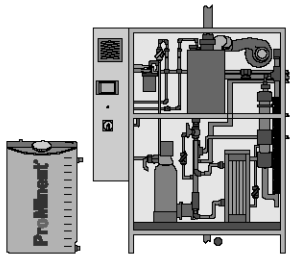

P_PMA_EL_0004_SW

Electrolysis systems of the CHLORINSITU® III type generate sodium hypochlorite with a concentration of approx. 20-25 g/l without major entrainment of sodium chloride from the electrolytic cell into the finished product. For this purpose, a saturated solution of sodium chloride is produced in a salt-dissolving tank included with the delivery that is then electrolysed in a membrane cell. Sodium hydroxide and hydrogen are produced in the chloride-free cathode chamber and chlorine gas and scaled down residual brine are produced in the anode chamber separated by the membrane. The resulting chlorine gas is bound with sodium hydroxide, collected in a storage tank as sodium-calcium hypochlorite and from there metered with separate metering pumps as needed. Because of the moderate pH value of approx. 9 to 9.5, the pH value of the treated water is significantly less affected than when using commercially available sodium-calcium hypochlorite (pH 12-13.5). The hydrogen produced is then a diluted with fresh air using an ATEX-approved ventilator and is dissipated harmlessly. The salt dissolving water comes from a softener integrated in the plant, thereby preventing the formation of lime deposits and ensuring the long service life of the electrolytic cell. The efficiency of the electrolysis is monitored by an integrated pH measurement of the sodium hydroxide production.

The systems are controlled with a modern PLC with a large, illuminated display and integrated modem for remote diagnosis and troubleshooting.

Electrolysis systems of the CHLORINSITU® III series are specifically suitable for applications where an ultra-pure and low-chloride sodium-calcium hypochlorite is required.

- Robust, simple technology
- Minimum acid consumption for pH correction
- Excellent service life of electrolysis cells
- Compact, space-saving design
- Safe system control with remote diagnosis by modem
- Low-chloride sodium-calcium hypochlorite with a high chlorine concentration
- Cost-effective operation thanks to the use of sodium chloride as an inexpensive raw material and lower chemical consumption for pH correction

Technical Data

Type/ output	Voltage supply	Power Uptake	Salt consumption	Process water consumption	Cooling water consumption	Dimensions L x W x H (mm)	Brine tank	Recommended capacity storage tank
g/h		kW	kg/h	l/h	l/h		l	l
50	3 x 400 V	0.90	0.1	2.4	–	1,250 x 600 x 1,550	80	100
75	3 x 400 V	1.00	0.2	3.6	–	1,250 x 600 x 1,550	80	100
100	3 x 400 V	1.10	0.2	4.8	–	1,250 x 600 x 1,550	80	200
200	3 x 400 V	1.50	0.4	9.7	–	1,250 x 600 x 1,550	80	300
300	3 x 400 V	1.90	0.6	15.0	100	1,250 x 600 x 1,550	200	400
400	3 x 400 V	2.30	0.8	19.0	100	1,250 x 600 x 1,550	200	500
500	3 x 400 V	2.70	1.1	24.0	100	1,250 x 600 x 1,550	200	600
600	3 x 400 V	3.10	1.3	29.0	100	1,250 x 600 x 1,550	200	700
1000	3 x 400 V	4.70	2.1	48.0	100	1,700 x 600 x 2,000	380	1200
1500	3 x 400 V	6.70	3.2	73.0	100	1,700 x 600 x 2,000	380	1800
2000	3 x 400 V	8.70	4.2	97.0	200	1,800 x 1,200 x 2,000	520	2500
2500	3 x 400 V	10.70	5.3	121.0	200	1,800 x 1,200 x 2,000	520	3000
3000	3 x 400 V	12.70	6.3	145.0	200	2,300 x 600 x 2,000	520	3300
3500	3 x 400 V	14.70	7.4	169.0	200	2,300 x 600 x 2,000	520	4000

Scope of delivery:

Electrolysis plant mounted ready for operation on a powder-coated stainless steel frame with programmable logic controller (PLC) in control cabinet, integrated softener, electrolytic cell, pH value monitoring, ATEX-certified bleeding system and side salt dissolving tank with level monitor. Level sensors to monitor the storage tanks for sodium hypochlorite to be provided by the customer. Automatic monitoring of the water hardness downstream of the softener and chlorine gas detector for plants from 600 g/h.

4 Electrolysis Plants CHLORINSITU®

4.6 Membrane Electrolysis Plants CHLORINSITU® IV compact

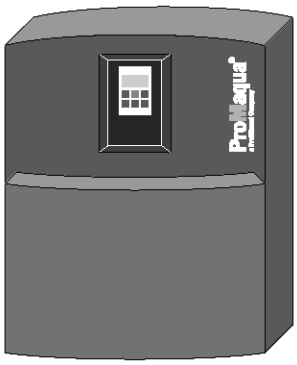

P_PMA_EL_0007_SW

Electrolysis systems of the CHLORINSITU® IV compact type generate ultra-pure chlorine gas in a vacuum process. For this purpose, a saturated solution of sodium chloride is produced in a salt dissolving tank included with the delivery that is then electrolysed in a membrane cell. Sodium hydroxide and hydrogen are produced in the cathode chamber and ultra-pure chlorine gas and scaled down residual brine are produced in the anode chamber separated by the membrane. The resulting chlorine gas is suctioned off through an injector integrated in the system and dissolved in the water to be treated as hypochloric acid. The generated hydrogen is discharged through a bleed line and the scaled down residual brine is disposed of. The sodium hydroxide is disposed of or optionally used with a metering pump integrated in the system to correct the pH of the water to be treated. The salt dissolving water comes from a softener integrated in the plant, thereby preventing the formation of lime deposits and ensuring the long service life of the electrolytic cell.

The microprocessor controller integrated in the system digitally indicates the actual feed rate and monitors all key functions. All operating and error messages are shown in plain text on the clearly arranged display. The feed rate can be controlled manually or externally.

Electrolysis systems of the CHLORINSITU® IV compact series are especially suitable for use with smaller swimming pools in residential properties and hotels.

- Robust, simple technology
- Compact, space-saving design
- Water disinfection and pH correction with one system
- Safe vacuum plant technology
- Production and metering of ultra-pure hypochloric acid
- Cost-effective operation thanks to the use of sodium chloride as an inexpensive raw material and lower chemical consumption for pH correction
- Optional integral chlorine and pH control

Technical Data

Type/ output g/h	Voltage supply	Power Uptake kW	Salt consumption g/h	Process water consumption l/h	Dimensions L x W x H (mm)	Brine tank l
25	230 V/50 Hz	0.11	65	1.5	575 x 355 x 650	120
50	230 V/50 Hz	0.22	131	3	575 x 355 x 650	120

Scope of delivery:

Chlorine electrolysis plant mounted on a wall plate, wired ready for connection, with integrated microprocessor control and softener system. Electrolytic cell with vacuum monitor, separate salt dissolving tank with level monitor. Fitted injector and metering equipment for sodium hydroxide (optional).

	Order no.
CHLORINSITU® IV compact 25	1036461
CHLORINSITU® IV compact 25 with pH correction	1036462
CHLORINSITU® IV compact 50	1036463
CHLORINSITU® IV compact 50 with pH correction	1036464

4 Electrolysis Plants CHLORINSITU®

4.7 Membrane Electrolysis Plants CHLORINSITU® IV

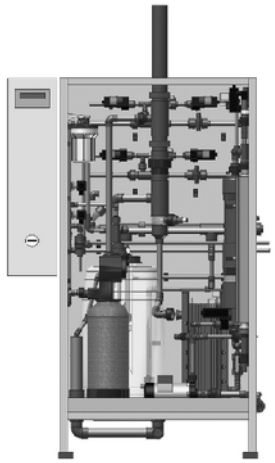

P_PMA_EL_0005_SW

Electrolysis plants of the types CHLORINSITU® IV generate ultrapure chlorine gas in a vacuum process. For this purpose, a saturated solution of sodium chloride is produced in a salt dissolving tank included in the scope of delivery which is then electrolysed in a membrane cell. Chloride-free sodium hydroxide and hydrogen are produced in the cathode chamber and ultrapure chlorine gas and scaled down residual brine in the anode chamber separated by the membrane. The resulting chlorine gas is suctioned off through an injector included in the scope of delivery and dissolved in the water to be treated as hypochloric acid. The chloride-free sodium hydroxide is stored intermediately and can be transferred into the water through the same injector to adjust the pH value. To achieve this, an external pH value controller is directly connected to the plant's control. The generated hydrogen is diluted with fresh air through an ATEX-compliant ventilator and discharged safely, the scaled down residual brine is disposed of. The salt dissolving water comes from a softener integrated in the plant. Thus, lime deposits can be prevented and a long service life of the electrolytic cell can be ensured.

The plants are controlled with a modern PLC with large, illuminated display and integrated modem for remote diagnosis and troubleshooting. The chlorine metering and the pH value correction are controlled as standard through contact inputs; analogue inputs are optionally available.

Electrolysis plants of the types CHLORINSITU® IV are suitable for all applications which require metering of hypochloric acid with simultaneous pH value correction.

- Robust technology
- Compact, space-saving design
- Safe vacuum plant technology
- Production and metering of ultrapure hypochloric acid without intermediate storage
- Chlorination and pH value adjustment with one single plant
- Economic operation thanks to the inexpensive raw material sodium chloride and less chemical consumption for pH value adjustment

Technical Data

Type/ output	Voltage supply	Power Uptake	Salt consumption	Process water consumption	Cooling water consumption	Dimensions L x W x H (mm)	Brine tank	Recommended capacity storage tank
g/h		kW	kg/h	l/h	l/h		l	l
100	230 V	1.10	0.2	0.8	–	1,050 x 600 x 1,550	80	–
150	3 x 400 V	1.30	0.3	1.3	–	1,050 x 600 x 1,550	80	–
200	3 x 400 V	1.50	0.4	1.7	–	1,050 x 600 x 1,550	200	–
300	3 x 400 V	1.90	0.6	2.5	–	1,050 x 600 x 1,550	200	–
400	3 x 400 V	2.30	0.8	3.4	–	1,050 x 600 x 1,550	200	–
500	3 x 400 V	2.70	1.1	4.2	–	1,050 x 600 x 1,550	200	–
600	3 x 400 V	3.10	1.3	5.0	–	1,050 x 600 x 1,550	200	–
750	3 x 400 V	3.70	1.6	6.3	–	1,500 x 600 x 2,000	380	–
1000	3 x 400 V	4.70	2.1	8.4	–	1,500 x 600 x 2,000	380	–
1250	3 x 400 V	5.70	2.6	11.0	–	1,500 x 600 x 2,000	380	–
1500	3 x 400 V	6.70	3.2	13.0	–	1,500 x 600 x 2,000	380	–
1750	3 x 400 V	7.70	3.7	15.0	–	1,500 x 600 x 2,000	380	–
2000	3 x 400 V	8.70	4.2	17.0	200	2,300 x 600 x 2,000	520	–
2500	3 x 400 V	10.70	5.3	21.0	200	2,300 x 600 x 2,000	520	–
3000	3 x 400 V	12.70	6.3	25.0	200	2,300 x 600 x 2,000	520	–
3500	3 x 400 V	14.70	7.4	29.0	200	2,300 x 600 x 2,000	520	–

Scope of delivery:

Electrolysis plant mounted ready for operation on a powder-coated stainless steel frame with programmable logic controller (PLC) in control cabinet, integrated softener, electrolytic cell, pH value monitoring of electrolysis, ATEX-certified bleeding system and side salt dissolving tank with level monitor. The scope of delivery also includes a central injector system matched to the plant to meter chlorine gas and sodium hydroxide, inclusive of a booster pump. Automatic monitoring of the water hardness downstream of the softener and chlorine gas detector for plants from 600 g/h.

4 Electrolysis Plants CHLORINSITU®

4.8 Membrane Electrolysis Plants CHLORINSITU® IV plus

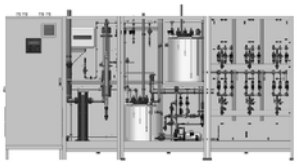

P_PMA_EL_0006_SW

Electrolysis plants of the types CHLORINSITU® IV plus generate ultrapure chlorine gas in a vacuum process. For this purpose, a saturated solution of sodium chloride is produced in a salt dissolving tank included in the scope of delivery which is then electrolysed in a membrane cell. Chloride-free sodium hydroxide and hydrogen are produced in the cathode chamber and ultrapure chlorine gas and scaled down residual brine in the anode chamber separated by the membrane. The resulting chlorine gas is processed further in two ways. As with the plants CHLORINSITU® IV, it is suctioned off through an injector included in the scope of delivery and dissolved in the water to be treated as hypochloric acid. If the complete production output is not needed, excess chlorine gas can also be bound with the produced sodium hydroxide as is the case with the plants of the types CHLORINSITU® III and stored intermediately as sodium hypochlorite. The plant thus does not have to be adjusted to the maximum demand of chlorine gas but can be adjusted to the average daily demand. Peaks of demand are covered by the additional metering of sodium hypochlorite from the intermediate storage. As with chlorine gas, metering will be carried out through a central injector system.

The chloride-free sodium hydroxide is also stored intermediately and can be transferred into the water to be treated through the central injector system to adjust the pH value. To achieve this, an external pH value controller is directly connected to the plant's control. The generated hydrogen is diluted with fresh air through an ATEX-compliant ventilator and discharged safely, the scaled down residual brine is disposed of. The salt dissolving water comes from a softener integrated in the plant. Thus, lime deposits can be prevented and a long service life of the electrolytic cell can be ensured. The efficiency of the electrolysis is monitored by an integrated pH measurement of the sodium hydroxide production.

The plants are controlled with a modern PLC with large, illuminated display and integrated modem for remote diagnosis and troubleshooting. The chlorine metering and the pH value correction are controlled as standard through contact inputs; analogue inputs are optionally available.

Electrolysis plants of the types CHLORINSITU® IV plus are a specifically economic alternative for all applications which require metering of hypochloric acid with simultaneous pH value correction.

- Robust technology
- Compact, space-saving design
- Safe vacuum plant technology
- Simultaneous production and metering of ultrapure hypochloric acid and sodium hypochlorite
- Chlorination and pH value adjustment with one single plant
- Economic operation thanks to the inexpensive raw material sodium chloride and less chemical consumption for pH value adjustment

4 Electrolysis Plants CHLORINSITU®

Technical Data

Type/ output	Voltage supply	Power Uptake	Salt consumption	Process water consumption *	Cooling water consumption	Dimensions LxWxH	Brine tank	Recommended capacity storage tank
g/h		kW	kg/h	l/h	l/h	mm	l	l
100	230 V	1.10	0.2	11	–	1,050 x 600 x 1,550 + 800 x 600 x 1,550	80	150
150	3 x 400 V	1.30	0.3	16	–	1,050 x 600 x 1,550 + 800 x 600 x 1,550	80	200
200	3 x 400 V	1.50	0.4	22	–	1,050 x 600 x 1,550 + 800 x 600 x 1,550	200	250
300	3 x 400 V	1.90	0.6	33	–	1,050 x 600 x 1,550 + 800 x 600 x 1,550	200	400
400	3 x 400 V	2.30	0.8	43	–	1,050 x 600 x 1,550 + 800 x 600 x 1,550	200	500
500	3 x 400 V	2.70	1.1	54	–	1,050 x 600 x 1,550 + 800 x 600 x 1,550	200	600
600	3 x 400 V	3.10	1.3	65	–	1,050 x 600 x 1,550 + 800 x 600 x 1,550	200	700
750	3 x 400 V	3.70	1.6	81	–	1,500 x 600 x 2,000 + 1,200 x 600 x 2,000	380	850
1000	3 x 400 V	4.70	2.1	108	–	1,500 x 600 x 2,000 + 1,200 x 600 x 2,000	380	1,100
1250	3 x 400 V	5.70	2.6	136	–	1,500 x 600 x 2,000 + 1,200 x 600 x 2,000	380	1,400
1500	3 x 400 V	6.70	3.2	163	–	1,500 x 600 x 2,000 + 1,200 x 600 x 2,000	380	1,700
1750	3 x 400 V	7.70	3.7	190	–	1,500 x 600 x 2,000 + 1,200 x 600 x 2,000	380	2,000
2000	3 x 400 V	8.70	4.2	217	200	2,300 x 600 x 2,000 + 1,200 x 600 x 2,000	520	2,200
2500	3 x 400 V	10.70	5.3	271	200	2,300 x 600 x 2,000 + 1,200 x 600 x 2,000	520	2,800
3000	3 x 400 V	12.70	6.3	325	200	2,300 x 600 x 2,000 + 1,200 x 600 x 2,000	520	3,300
3500	3 x 400 V	14.70	7.4	379	200	2,300 x 600 x 2,000 + 1,200 x 600 x 2,000	520	3,900

* **The process water consumption depends on the ratio between chlorine gas and stock production. Here, the value for a ratio 50 % : 50 % is given.**

Scope of delivery:

Electrolysis plant mounted ready for operation on a powder-coated stainless steel frame with programmable logic controller (PLC) in control cabinet, integrated softener, electrolytic cell, pH value monitoring of electrolysis, ATEX-certified bleeding system and side salt dissolving tank with level monitor. Level sensors to monitor the storage tanks for sodium hypochlorite to be provided by the customer. The scope of delivery also includes a central injector system matched to the plant to meter chlorine gas, sodium hypochlorite and sodium hydroxide, inclusive of a booster pump. Automatic monitoring of the water hardness downstream of the softener and chlorine gas detector for plants from 600 g/h.

4 Electrolysis Plants CHLORINSITU®

4.9 Gas Warning Device For Monitoring For Chlorine Gas

The Type GMA 36 chlorine gas warning device is a compact measurement and switching unit designed for monitoring the surrounding air for dangerous concentrations of chlorine gas.

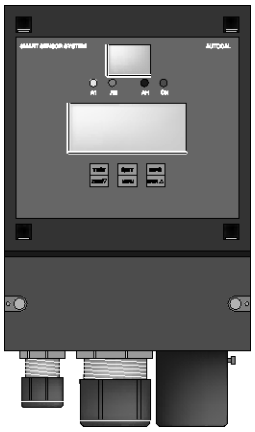

pk_7_004_1
Gas warning devices GMA 36

Gas warning device type GMA 36

For chlorine monitoring

Type	Chlorine
Warning at approx.	2.0 ppm/vol%
Alarm at approx.	4.0 ppm/vol%
Permissible ambient temperature	-15…45°C
Protection class housing	IP 54
Dimensions (without PGs, without sensor) H x W x D	247 x 135 x 95 mm
Supply	85 – 264 / 50 – 60 V/Hz
Power consumption	5 W
Warm-up phase max.	150 s
Relay contact "Warning", self-resetting	230 / 1 V/A
Relay contact "Alarm", latching	230 / 1 V/A
Relay contact "Horn", latching, can be acknowledged	230 / 1 V/A
Sensor measuring principle	electrochemical
Sensor service life (depending on environmental cond.)	2–3 Years

Note: The sensor reacts to all oxidising gases.

	Order no.
GMA 36 chlorine gas detector	1023157

Spare parts

		Order no.
Replacement sensor	for chlorine, chlorine dioxide, ozone	1023314
Replacement sensor	for gas warning devices in the Life CGM range	1003009

5 Membrane Technology

Contents Page

5.1 Overview Membrane Technology 1

5.2 Performance Overview Ultrafiltration 2

5.3 Performance Overview Of Nanofiltration 4

5.4 Performance Overview Reverse Osmosis 6

5.5 Questionnaire 8
5.5.1 Questionnaire on the design of a UF system 8
5.5.2 Questionnaire on the design of an RO system 9

5.6 Dulcoclean® Ultrafiltration Systems 10
5.6.1 Ultrafiltration Systems Dulcoclean® UF eco Range 10
5.6.2 Ultrafiltration Systems Dulcoclean® UF Range 11

5.7 Dulcosmose® Reverse Osmosis Plants 12
5.7.1 Dulcosmose® Reverse Osmosis Plants, ecoPRO 12
5.7.2 Dulcosmose® Reverse Osmosis Plants, TW Range 14
5.7.3 Dulcosmose® Reverse Osmosis Plants, BW Range 15
5.7.4 Dulcosmose® Reverse Osmosis Plants, SW Range 16

5 Membrane Technology

5.1 Overview Membrane Technology

Systems for membrane filtration

In water treatment, membrane filtration is the process for removing particles and salts in the water ensuring the lowest operating costs. ProMaqua offers versatile and high-quality system technology in this field. This is complemented by the extensive ProMaqua® product range to produce customer-specific complete solutions.

Membrane filtration is a physical process to separate substances with the help of semi-permeable membranes. There are four types of processes, depending on the size of the particles/molecules to be removed:

- Microfiltration
- Ultrafiltration
- Nanofiltration
- Reverse osmosis

The following table shows the separation limits of the individual processes:

	Microfiltration	**Ultrafiltration**	**Nanofiltration**	**Reverse osmosis**
Particle size	> 0.1 µm	0.1 – 0.01 µm	0.01 – 0.001 µm	< 0.001 µm
Particle type	Suspended particles, colloidal turbidity, oil emulsions	Macromolecules, bacteria, cells, viruses, proteins	Low-molecular organic compounds, ions	Ions

The ProMaqua experts, with their detailed industry knowledge, are not only able to put together the optimum system for the relevant application but also deliver complete water treatment solutions from one source, supported by the extensive ProMinent product range.

5 Membrane Technology

5.2 Performance Overview Ultrafiltration

Ultrafiltration is a membrane process which is increasingly used in water treatment to separate undesired water components. Parasites, bacteria, viruses and high-molecular organic substances as well as other particles are retained.

The applications of ultrafiltration are wide spread and may include different types of water.

Typical applications include drinking water, river water, process water, swimming pool water, seawater and waste water.

The tasks range from drinking water purification to meet physical and microbiological limit values in accordance with the German Drinking Water Ordinance up to the pre-treatment of seawater for desalination by reverse osmosis.

The systems are matched to a specific task by individually selecting the membrane type and the operating mode. ProMaqua® uses extremely robust and resistant UF membranes and the dead-end principle to facilitate an optimisation with regard to investment costs, required space and operating costs. With this selection, all raw waters with the exception of waste water can be filtered largely without using chemicals.

The dead-end operation represents the standard operating mode. The raw water flows into the capillaries. The pure water (filtrate) passes through the membrane while the other constituents are retained on the surface of the membrane.

The constituents form a layer on the membrane. The membrane is backwashed fully automatically in regular intervals to remove the filter cake.

Ultrafiltration systems basically consist of:

- Stainless steel or high-grade coated steel rack
- Pre-filter to protect the membranes, if required. This filter can be designed as a backwashing filter optionally.
- UF membrane modules
- Pneumatically controlled valves made of high-quality materials
- Electronic pressure measurement
- Filtration pump and backwash pump with frequency converter made of suitable high-quality materials
- Magnetically inductive flow metering to control the flow rates for filtration and backwashing.
- Integrated filling system for the backwash water tank. The backwash water tank is also integral to small systems. With larger systems, tanks from our product range can be integrated or an application-specific solution found depending on the customer's requirements.
- PLC control with touch screen panel or microprocessor control unit.
  The PLC control simultaneously monitors all important parameters, such as pressure, pressure difference and flow rates. This ensures that the membranes are optimally protected. The control of pre- and post-treatment processes can be integrated, if required.

Advantages of ultrafiltration systems

- Filtrate values smaller than 0.1 NTU independent of the raw water turbidity.
- Molecular weight cut off of the membranes (MWCO, Molecular Weight Cut Off)
  approx. 100 kDa (kilodalton).
- Excellent retention rates for bacteria (99.9999 %) and viruses (99.99 % based on MS2 phages).
- Very easy to use and simple to combine with other systems thanks to PLC control with touch screen.
- Optimum operating processes thanks to modern measuring and control technology.
- Complete solutions with perfectly coordinated pre- and post-treatment are available on request.

Ultrafiltration systems are available with a filtration capacity ranging from 1 to 80 m^3/h at a water yield of > 96 %.

5 Membrane Technology

Areas of application of ultrafiltration systems

Typical areas of application include the removal of particles, turbidity and pathogens in public or private drinking water supplies. Ultrafiltration is predominantly used for the treatment of freshwater, in particular surface water, spring water or well water. In principle, brackish water and seawater can also be treated, e.g. as pre-treatment for a following desalination by nanofiltration or reverse osmosis. Further areas of application include the treatment of swimming pool water, process water from the food and beverage industry.

A typical general system layout is shown below:

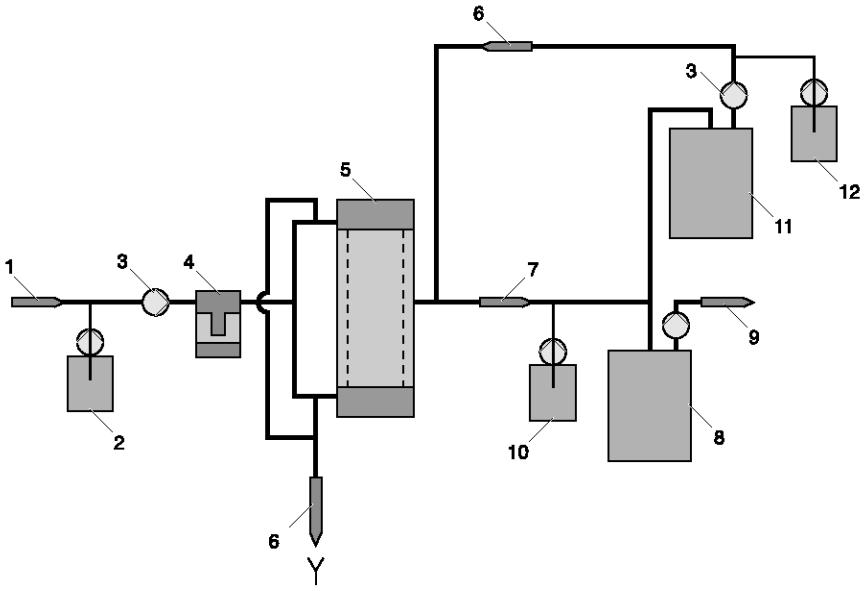

1 Raw water
2 Optional pre-treatment
3 Pump
4 Filter
5 Module(s)
6 Backwash water
7 Filtrate
8 Filtrate tank
9 Consumer
10 Post-treatment
11 Backwash water tank
12 Metering

P_PMA_UO_0008_SW

Our engineers are using their wide experience in the water treatment to determine the ultrafiltration system which is adopted to the specific raw water requirements. If desired and/or required, the best-suited pre- and post-treatment is also determined. For this purpose, numerous further ProMinent® and ProMaqua® products are available. Thus, the customer is offered a complete package of solutions from one single source.

The filtration capacity of the ultrafiltration systems ranges from 1 to 80 m^3/h. Other capacities are available on request. Please contact us, we will be glad to assist you.

5 Membrane Technology

5.3 Performance Overview Of Nanofiltration

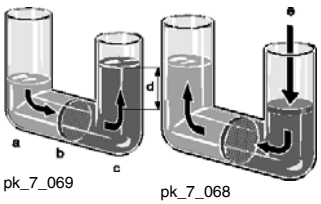

pk_7_069 pk_7_068

a diluted solution (permeate)
b semi-permeable membrane
c concentrated solution (concentrate)
d hydrostatic head corresponding to the osmotic product
e pressure

Osmosis Reverse Osmosis

Nanofiltration is based on the same principle as reverse osmosis. The difference: The cutoff limit is slightly lower. Although ions are still held back by this type of membrane filtration, this takes place at a distinctly reduced extent compared to reverse osmosis. Ultimately, operating costs are reduced.

Typical salt retention rates are at 80 – 90 %. Polyvalent ions (e.g. Ca, Mg) are retained more effectively than monovalent ions (e.g. Na, K) so that nanofiltration systems are often used as an alternative to classic water softening.

If a lower salt retention rate is acceptable, nanofiltration systems offer an inexpensively priced alternative to reverse osmosis facilities, as nanofiltration systems can be operated at lower operating pressures. This means a smaller booster pump can be used. Advantage: Lower investment costs and, above all, lower energy costs! The operating costs are drastically reduced compared to conventional water softening as intricate and expensive routine regeneration with large quantities of salt is rendered completely unnecessary.

ProMaqua offers virtually all nanofiltration systems.

In principle, the untreated water to be desalinated by way of nanofiltration is pumped into a chamber which is closed off by a semi-permeable membrane. The membrane is permeable to pure water and smaller ions. All other water constituents are held back. Partially desalinated water (permeate) and a concentrated solution (concentrate) are produced. For this process, ProMaqua uses high-quality nano filtration membranes.

Dulcosmose® nanofiltration systems basically consist of:

- Frame made from stainless steel, high grade double layer coated steel or PP
- 5 µm pre-filter
- inlet valve made from suitable, high-grade materials depending on the salt content of the raw water
- Pressure switch to protect the high-pressure pump
- High-pressure pump made from suitable, high-grade materials depending on the salt content of the raw water
- Low-pressure membranes designed as spiral-wound modules and fitted in GRP pressure vessels
- Variable-area flow meter or dectronic and pressure gauge
- Stainless steel control and regulating valves for pressure and concentrate control
- ProMaqua in-house conductivity measurement cell and control system with versatile programming options also for the control of external pre- and post-treatment components
- A semi-automatic chemical cleaning system can be integrated as required

Advantages of Dulcosmose® nanofiltration systems

- Easy and safe operation ensured by ultramodern microprocessor control with integrated conductivity measurement and plain text display of operating status
- Efficient operation with a permeate yield of up to 80 % and up to 90 % separation of dissolved ions
- Low energy requirements through the use of low energy nanofiltration membranes
- Long service life of membranes thanks to integrated cleaning concept
- Well-designed, service-friendly system structure on stainless steel, high grade double coated steel or PP racks
- Low investment and operating costs as optimised components specifically matching the individual application are used
- On request, complete solutions with precisely matching pre-treatment and post-treatment facilities such as ProMinent® metering, measurement and control technology, i.e. simple networking, perfect function and overall monitoring of various system components

5 Membrane Technology

Applications of Dulcosmose® Nanofiltration systems

Typical applications include desalination installations in public or private drinking water supply systems, in the chemical and pharmaceuticals industry, food and beverage industry, metal-processing industry, electroplating as well as in boiler feed water treatment. A typical system layout is shown in the following:

1 Raw water
2 Filter
3 Pump
4 Module(s)
5 Concentrate
6 Permeate
7 Permeate tank
8 Consumer
A Pre-treatment
B Nanofiltration
C Post-treatment

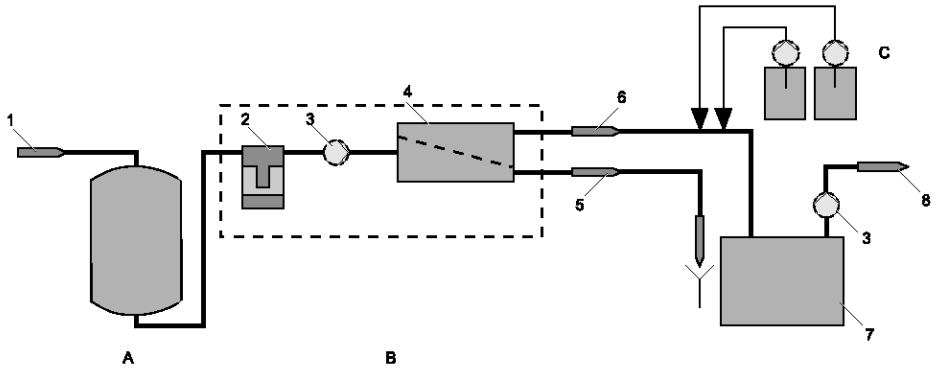

pk_7_067

Nanofiltration is predominantly used for the treatment of fresh water.

However, the system can also be used to treat brackish water and seawater, e.g. as a pre-treatment stage for further desalination in a reverse osmosis system.

Our engineers are using their wide experience in the water treatment to determine the nanofiltration system which is adopted to the specific raw water requirements. If required and/or necessary, the most suitable pre-treatment and post-treatment facilities are also selected from a comprehensive range of suitable ProMinent® and ProMaqua® products. In this way, a complete package is assembled for the customer with all components from under one roof. ProMaqua's extensive experience gained in the construction of specialised systems and complete solutions ranges from rack-mounted systems through to systems installed in standard transport containers.

The permeate capacity of the Dulcosmose® standard nanofiltration systems ranges from 1 to 50 m^3/h. Other capacity ratings are available on request.

5 Membrane Technology

5.4 Performance Overview Reverse Osmosis

Reverse osmosis is the part of membrane filtration with the highest separation performance. It is the reverse of the natural process of osmosis and hence is used as a method for desalination of aqueous solutions. Today, using suitable high-performance membranes, over 99 % of all salts can be removed from an aqueous solution.

The raw water to be desalinated is introduced into a chamber which is sealed by a semi-permeable membrane. An artificial pressure is created in the chamber, opposing the osmotic pressure gradient. The membrane is only permeable to pure water, and not to the ions and other particles dissolved in it, so part of the raw water becomes pure desalinated water (permeate) and part becomes even higher concentrated solution (concentrate). ProMaqua uses high-grade, low-pressure membranes for this process in its Dulcosmose® reverse osmosis plants.

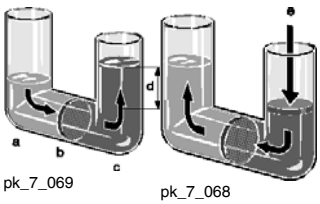

pk_7_069 pk_7_068

a diluted solution (permeate)
b semi-permeable membrane
c concentrated solution (concentrate)
d hydrostatic head corresponding to the osmotic product
e pressure

Osmosis Reverse Osmosis

Basically, Dulcosmose® reverse osmosis plants consist of:

- Frame made from stainless steel, high grade double layer coated steel, or PP
- 5 µm pre-filter
- inlet valve made from suitable, high-grade materials depending on the salt content of the raw water
- Pressure switch to protect the high-pressure pump
- High-pressure pump made from suitable, high-grade materials depending on the salt content of the raw water
- Low-pressure membranes designed as spiral-wound modules and fitted in GRP pressure pipes
- Variable-area flow meter or dectronic and pressure gauge
- Stainless steel control and regulating valves for pressure and concentrate control
- ProMaqua in-house conductivity measurement cell and control system with versatile programming options also for the control of external pre- and post-treatment components
- Semi-automatic system for chemical cleaning

Advantages of Dulcosmose® reverse osmosis plants

- Simple, safe operation using modern microprocessor control with integrated conductivity measurement and real text display of operating status
- Efficient operation with pure water recovery of up to 80 % and rejection of over 99 % of dissolved ions
- Reduced energy consumption through use of “low-energy” reverse osmosis membranes and energy recovery from the concentrate stream by using state of the art pressure exchanger technology (with sea water desalination)
- Long service life of the membranes thanks to integrated cleaning concept and permeate and raw water flushing option
- Well-designed, service-friendly system structure on stainless steel, high grade double coated steel or PP racks
- Low investment and operating costs as optimised components specifically matching the individual application are used
- On request, complete solutions with precisely matching pre-treatment and post-treatment facilities such as ProMinent® metering, measurement and control technology, i.e. simple networking, perfect function and overall monitoring of various system components

5 Membrane Technology

Applications of Dulcosmose® reverse osmosis plants

Typical applications are desalination duties in municipal or private drinking water supply, in the chemical and pharmaceuticals industries, food and beverages industry, metal processing industry, electroplating, in boiler feed water treatment and in power stations, for example.

A typical general plant schematic is shown below:

1 Raw water
2 Filter
3 Pump
4 Module(s)
5 Concentrate
6 Permeate
7 Permeate tank
8 User
A Pre-treatment
B Reverse osmosis
C Post-treatment

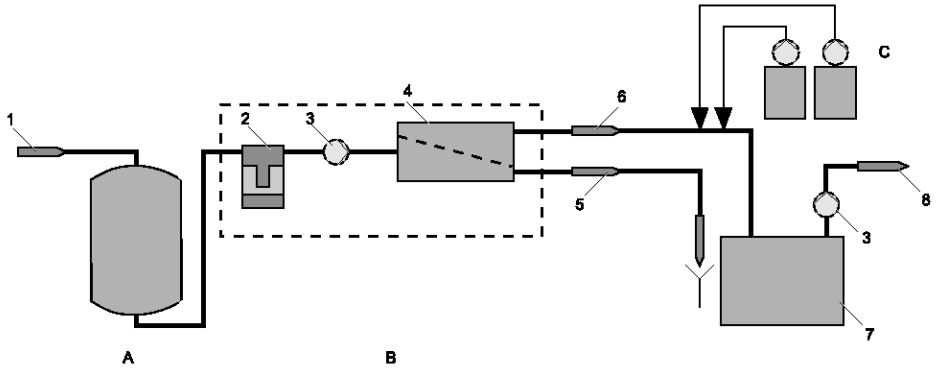

pk_7_067

Basically, three types of raw water with different salt contents can be considered for desalination:

- drinking water (typically up to 1,000 mg/l)
- brackish water (typically up to 2,000 - 5,000 mg/l)
- sea water (typically higher than 35,000 mg/l)

Our engineers use their years of experience in treatment of this raw water to determine - on the basis of the particular raw water analysis – the optimum variants for the suitable reverse osmosis plant for the customer. At the same time, the most suitable pretreatment and post-treatment stages are selected using other ProMinent® products. So a complete package is put together for the customer, from a single source. One of our specialities here is the supply of complete plants installed in a standard transport container.

ProMaqua also has wide experience in building other special plants, e.g. two-pass plants for higher permeate quality requirements. Please contact us – we'll be happy to advise you.

Type series		Reverse osmosis Dulcosmose® ecoPRO	TW	BW	SW
Permeat output [m³/h]	50				
	25				
	10				
	5				
	2,5				
	1				
	0,5				
	0,25				
	0,1				
Salt content mg/l		< 1.000 mg/l	< 1.000 mg/l	< 5.000 mg/l	< 40.000 mg/l
Particle removal		■	■	■	■
Particle removal and desalination		■	■	■	■

P_PMA_MT_0002_SW

5 Membrane Technology

5.5 Questionnaire

5.5.1 Questionnaire on the design of a UF system

Application:	Drinking water production	☐
	Process water for food/beverage industry	☐
	Circulation water for swimming pools	☐
	Flushing water for swimming pools	☐
	Other: _____	☐
Type of raw water	Drinking water	☐
	Surface water (lake, river water)	☐
	Source water	☐
	Ground water	☐
	Brackish water, sea water	☐

Design principles: (please state maximum (peak), minimum and average values)

Clear water requirement:	_____ m^3/h	Chloride:	_____ ppm
Clear water requirement:	_____ m^3/day	Iron in solution:	_____ ppm
Temperature:	_____ °C	Particular iron:	_____ ppm
Turbidity:	_____ NTU	Manganese in solution:	_____ ppm
COD:	_____ ppm	Particular manganese:	_____ ppm
TOC/DOC:	_____ ppm	Fluctuations?	Yes ☐ No ☐
Total hardness:	_____ °dH		

Remarks (current pre-treatment, special requirements)

_____

_____

_____

P_PMA_MT_0001_SW

5.5.2 Questionnaire on the design of an RO system

Clean water requirement: _____ m^3/h

Clean water requirement: _____ m^3/day

Operating hours: _____ h/day

Required clean water pressure: _____ bar

Raw water temperature, min./max.: _____ °C

Required quality of clean water:

Conductivity: _____ µS/cm

pH value: _____

Bacteriological quality:

Drinking Water Directive ☐
Germ-free and sterile ☐

Intended use of clean water:

_____

Type of raw water:

Drinking water ☐
Well water ☐
Brackish water ☐
Lake water ☐
or _____ ☐

Fluctuations: yes ☐ no ☐

State fluctuations:

Conductivity: _____ µS/cm

pH value: _____

Ca: _____ mg/l

Mg: _____ mg/l

K: _____ mg/l

Na: _____ mg/l

Ba: _____ mg/l

Sr: _____ mg/l

Fe: _____ mg/l

Mn: _____ mg/l

Al: _____ mg/l

Available space HxWxD: _____ m

Location of the system: _____ Floor

Location of the users: _____ Floor

Existing clean water tank: _____ m^3

Existing clean water pump: _____ m^3/h
_____ bar

Lift yes ☐ no ☐

H x W x D: _____ mm

Door dimensions

H x W _____ mm

Crane on site: yes ☐ no ☐

Lifting capacity: _____ t

Raw water pressure: _____ bar

Raw water connection: _____ "

Clean water pipes available yes ☐ no ☐

Material: _____ Ø
_____ "

Mains voltage: _____ V/Hz

HCO_3: _____ mg/l

SO_4: _____ mg/l

Cl: _____ mg/l

NO_3: _____ mg/l

F: _____ mg/l

PO_4: _____ mg/l

CO_2 (free): _____ mg/l

SiO_2: _____ mg/l

COD*: _____ mg/l

*COD = chemical oxygen demand

P_PMA_UO_0018_SW

5 Membrane Technology

5.6 Dulcoclean® Ultrafiltration Systems

5.6.1 Ultrafiltration Systems Dulcoclean® UF eco Range

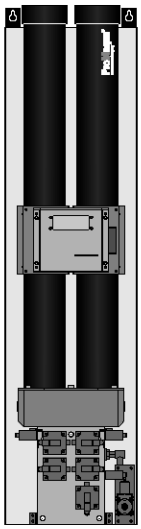

P_PMA_DN_0002_SW

This series represents the compact ProMaqua® ultrafiltration system for residential water supply, apartment blocks, hotels, leisure centres, restaurants and industrial facilities and even smaller districts or villages can be supplied with clean drinking water with the use of a storage tank. Dulcoclean® UF eco systems are ideal for the removal of turbidity, particles and microbiological contaminations (bacteria, viruses, parasites) and the systems provide a consistently turbidity-free filtrate quality - free from pathogens - even with fluctuating raw water compositions. The retention rate for bacteria and viruses (based on MS2 phages) is at least 99.999 % or 99.99 % respectively.

Dulcoclean® UF eco 2 systems are cleaned fully-automatically with a forward flush depending on the degree of contamination of the membrane. Cleaning can be delayed to a pre-set time to avoid interrupting the water supply.

An intelligent PLC control ensures the fully automatic operation of the Dulcoclean® UF eco 4 system and guarantees minimum energy and water consumption. The intervals of backwashings are automatically adapted to the degree of contamination of the membrane and the water quality. In addition, further peripheral components of your complete water treatment system can be controlled centrally. A regularly conducted integrity test offers maximum safety throughout the process.

Plant	Filtration capacity* at a max. of 15 °C.	Number of membranes	Connected load filtration/ backwashing	Dimensions H x W x D
	l/h	No.	W	mm
Dulcoclean® UF eco 2	2,100	1	5 / 8	1,268 x 149 x 149
Dulcoclean® UF eco 4	3,900	2	5 / 35	1,368 x 267 x 358

* Filtration performance depends on the water quality and the water pressure upstream of the system. The filtration performance reduces with increasing filtration duration. The maximum filtration performance is based on a new and uncontaminated module.

Typical continuous filtration performance and pre-treatment by the Dulcoclean® UF eco 4 systems with different types of raw water:

Type of raw water	Recommended pre-treatment	Continuous filtration performance
Well water	< 300 µm pre-filtration, ultrafiltration	1,900 l/h
Well water close to the surface, without DOC	< 300 µm pre-filtration, ultrafiltration	1,200 - 1,900 l/h
Well water close to the surface, with DOC	< 300 µm pre-filtration, flocculation, ultrafiltration with CIP	1,200 - 1,600 l/h
Surface water	< 300 µm pre-filtration, flocculation + sand filtration, ultrafiltration with CIP	950 - 1,200 l/h

Electrical connection	230/115 V, 50/60 Hz, 12/24 V DC
Operating pressure	2.5 – 5.0 bar
Trans-membrane pressure max.	2.5 – 3.5 bar
Operating temperature	4–40 °C
Membrane type	Robust single bore PES UF membrane
Nominal pore size	15 nm

Complete solutions with perfectly matched pre- and post-treatment are also available on request.

5.6.2 Ultrafiltration Systems Dulcoclean® UF Range

This range is the all-purpose, compact ProMaqua model for modern drinking water treatment. These systems are equipped with very robust ultrafiltration membranes and are operated in an economical dead-end process. Compared to the cross-flow mode, this process requires significantly less water and energy. Backwashing processes are performed at regular intervals to prevent blockage of the modules. Adjusted to the raw water quality, cleaning is supported by the addition of chemicals as required. The system is controlled by a PLC. The system offers a high level of flexibility and operating safety, thanks to the wide range of different control options. Variations and changes in the raw water quality can thus be easily compensated for. All relevant events are detected electronically.

The Dulcoclean® UF range is suitable for the following values in feed water:

pH range	3.0 … 12.0
Free chlorine	max. 200,00 ppmh
Turbidity	0.5 ... 30 NTU
DOC	0.5 ... 12 mg/l
Suspended solids	50 mg/l

Deviating values influence the performance data and require a separate design of the system. Please contact our experts.

Plant	Filtration capacity* at 15 °C m^3/h	Number of 8″ membranes No.	Dimensions H x W x D mm
Dulcoclean® UF 1	2.7 - 4.5	1	1,864 x 588 x 1,137
Dulcoclean® UF 2	5.4 - 9.0	2	1,864 x 588 x 1,638
Dulcoclean® UF 4	10.8 - 18.0	4	1,864 x 588 x 2,638

* Filtrate performance depends on the water quality

Systems with filtration capacity more than 18 m^3/h are designed on a project basis. Offers are available on request. Please contact us.

Optionally available are a fully automatic neutralisation system for the treatment of acid and alkaline backwash water, an integrity test as well as customized data logging.

5 Membrane Technology

5.7 Dulcosmose® Reverse Osmosis Plants

5.7.1 Dulcosmose® Reverse Osmosis Plants, ecoPRO

Dulcosmose® reverse osmosis systems ecoPRO range on PP rack; capacity range 100-1,500 l/h

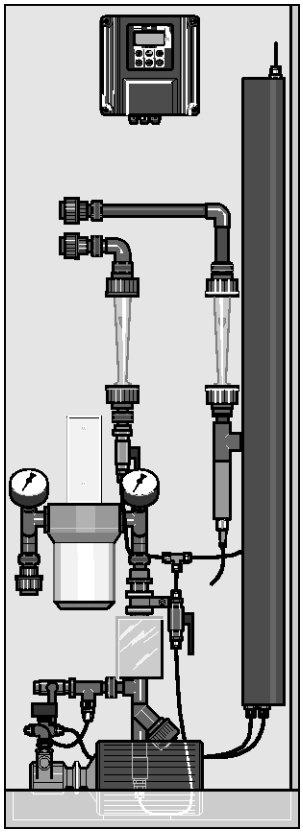

pk_7_062_V2

This range is the cost-effective standard system for modern drinking water desalination. Equipped with the latest generation of “ultra low-pressure” membranes, these systems achieve maximum permeate capacity at low operating pressures, thereby ensuring reduced investment and running costs. The low operating pressures enable the systems to be fitted cost-effectively with PVC piping or piping with pressure hoses throughout.

The system sizes ecoPRO 600-1500 are additionally available with an integrated semi-automatic cleaning system and raw water flushing option. The semi-automatic cleaning system can also be simply retrofitted.

The ecoPRO 100-1500 range was designed for the following values in feed water:

pH range	3.0 … 10.0
silt density index max.	3
free chlorine max.	0.1 mg/l
total Fe, Mn max.	0.2 mg/l
total hardness max.	0.1 °dH
bacteria count max.	100 KBE/ml
turbidity max.	0.5 NTU
COD max.	5 mg/l**

Plants with 2.5“ and 4“ membranes, salt rejection of the plants 90-95 %

Plant	Permeate capacity at 15 °C water temperature	Number of 2.5" and 4" membranes	Connected load	Dimensions H x W x D	Max. salt content *
	l/h	No.	kW	mm	mg/l*
ecoPRO 100	100	1	0.37	1,400 x 500 x 320	650
ecoPRO 200	200	2	0.55	1,400 x 500 x 320	650
ecoPRO 300	300	1	1.10	1,500 x 600 x 400	650
ecoPRO 550	550	2	1.10	1,500 x 600 x 400	650
ecoPRO 600	600	2	1.50	1,850 x 800 x 800	1,000
ecoPRO 900	900	3	1.50	1,850 x 800 x 800	1,000
ecoPRO 1200	1,200	4	1.50	1,850 x 800 x 800	1,000
ecoPRO 1500	1,500	5	2.20	1,850 x 800 x 800	1,000

* differing salinities affect the performance data accordingly

** as O_2

5 Membrane Technology

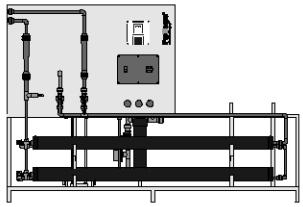

P_PMA_UO_0020_SW1

Dulcosmose® reverse osmosis systems ecoPRO range on powder-coated steel rack; capacity range 1,800-2,700 l/h

This range is the standard model for modern drinking water desalination. Equipped with the latest generation of „ultra low-pressure“ membranes, these systems guarantee maximum permeate output at low operating pressures and thus low investment and operating costs. The low operating pressures facilitate a cost-effective PVC piping. These systems are also available with an integrated semi-automatic cleaning system and with raw water flushing option.

The ecoPRO 1800-2700 range was designed for the following values in feed water:

salt content max.	1,000 mg/l*
pH range	3.0 … 10.0
silt density index max.	3
free chlorine max.	0.1 mg/l
total Fe, Mn max.	0.2 mg/l
total hardness max.	0.1 °dH
bacteria count max.	100 KBE/ml
turbidity max.	0.5 NTU
COD max.	5 mg/l**

* differing salinities affect the performance data accordingly

** as O_2

Plants with 4“ membranes, salt rejection of the plants 90-95 %

Plant	Permeate capacity at 15 °C water temperature	Number of 4" membranes	Connected load	Dimensions H x W x D
	l/h	No.	kW	mm
ecoPRO 1800	1,800	6	2.2	1,750 x 2,500 x 750
ecoPRO 2400	2,400	8	2.2	1,750 x 2,600 x 750
ecoPRO 2700	2,700	9	2.2	1,800 x 3,500 x 750

5 Membrane Technology

5.7.2 Dulcosmose® Reverse Osmosis Plants, TW Range

This range represents the universal model for modern drinking water desalination. Equipped with the latest generation of “ultra low-pressure” membranes, these plants achieve maximum permeate capacity at low operating pressures, so ensuring reduced investment and running costs. The low operating pressures allow the use of cost-effective PVC pipework on these systems. In addition these plants are available with integrated semi-automated cleaning system and a permeate and raw water flushing option.

Special customised versions are possible with the TW range. Different pipework materials and different membrane types can be implemented, for increased salt rejection, for example. Measurement and control equipment, e.g. conductivity, redox potential or pH measurement, and dosing equipment (in pretreatment and post-treatment) can easily be integrated in these plants.

The TW range was designed for the following values in the feed water:

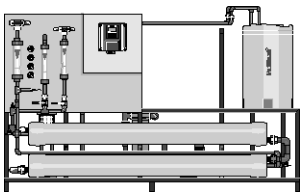
pk_7_064

salt content max.	1,000 mg/l*
pH range	3.0 … 10.0
silt density index max.	3
free chlorine max.	0.1 mg/l
total Fe, Mn max.	0.2 mg/l
total hardness max.	0.1 °dH
bacteria count max.	100 KBE/ml
turbidity max.	0.5 NTU
COD max.	5 mg/l**

* differing salinities affect the performance data accordingly

** as O_2

Plants with 8“ membranes, salt rejection of the plants 90-95 %

Plant	Permeate capacity at 15 °C water temperature	Number of 8″ membranes	Connected load	Dimensions H x W x D
	l/h	No.	kW	mm
PRO 0300TW	3,000	3	3.0	1,800 x 4,000 x 1,000
PRO 0400TW	4,000	4	3.0	1,800 x 3,000 x 1,000
PRO 0500TW	5,000	5	4.0	1,800 x 4,000 x 1,000
PRO 0600TW	6,000	6	4.0	1,800 x 4,000 x 1,000
PRO 0700TW	7,000	6	7.5	1,800 x 4,000 x 1,000
PRO 0800TW	8,000	7	7.5	1,800 x 4,000 x 1,000
PRO 0900TW	9,000	7	7.5	1,800 x 4,000 x 1,000
PRO 1000TW	10,000	8	7.5	1,800 x 3,000 x 1,000
PRO 1100TW	11,000	9	11.0	1,800 x 4,000 x 1,000
PRO 1200TW	12,000	10	11.0	1,800 x 4,000 x 1,000
PRO 1300TW	13,000	11	11.0	1,800 x 4,000 x 1,000
PRO 1400TW	14,000	12	11.0	1,800 x 4,000 x 1,000
PRO 1500TW	15,000	12	11.0	1,800 x 4,000 x 1,000
PRO 2000TW	20,000	18	11.0	1,800 x 7,000 x 1,200
PRO 2500TW	25,000	24	15.0	1,800 x 7,000 x 1,200*
PRO 3000TW	30,000	28	18.5	1,800 x 7,000 x 1,200*
PRO 4000TW	40,000	34	22.0	1,800 x 7,000 x 1,200*
PRO 5000TW	50,000	48	22.0	1,800 x 7,000 x 1,200*

* separate cleaning tank

On request, these plants can also be supplied with different membrane types for other salt rejection, and with measurement and control equipment (conductivity, redox potential, pH measurement) and dosing equipment (in pretreatment and post-treatment).

5.7.3 Dulcosmose® Reverse Osmosis Plants, BW Range

This range represents the standard model for modern brackish water desalination. Equipped with the latest generation of "high rejection low-pressure" membranes, these plants achieve maximum permeate capacity at moderate operating pressures, so ensuring reduced investment and running costs. The ProMaqua® BW range of reverse osmosis plants is piped in PVC on the low-pressure side. The system pipework on the high-pressure side is fabricated in high-grade stainless steel, type DIN 1.4571. ProMaqua® stainless steel pipework systems are welded under shielding gas and root gas atmospheres (TIG) and then passivated in our own pickling bath.

In addition these plants are equipped with integrated semi-automated cleaning system and all permeate and raw water flushing options as standard.

The BW range was designed for the following values in the feed water:

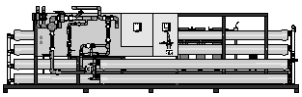
pk_7_065

salt content max.	5,000 mg/l*
pH range	3.0 … 10.0
silt density index max.	3
free chlorine max.	0.1 mg/l
total Fe, Mn max.	0.2 mg/l
total hardness max.	water must be chemically stabilised
bacteria count max.	100 KBE/ml
turbidity max.	0.5 NTU
COD max.	5 mg/l**

* Deviating salt contents have a corresponding influence on the performance data.
** as O2

Plants with 8" membranes, salt rejection of the plants 95-98 %

Plant	Permeate capacity at 25 °C water temperature	Number of 4" and 8" membranes	Connected load	Dimensions H x W x D
	l/h	No.	kW	mm
PRO 0200BW	2,000	9	4.0	1,800 x 3,500 x 750
PRO 0300BW	3,000	3	5.5	1,800 x 4,000 x 1,000
PRO 0400BW	4,000	4	5.5	1,800 x 3,000 x 1,000
PRO 0500BW	5,000	5	5.5	1,800 x 4,000 x 1,000
PRO 0600BW	6,000	6	7.5	1,800 x 4,000 x 1,000
PRO 0700BW	7,000	7	7.5	1,800 x 4,000 x 1,000
PRO 0800BW	8,000	8	11.0	1,800 x 4,000 x 1,000
PRO 0900BW	9,000	9	15.0	1,800 x 4,000 x 1,000
PRO 1000BW	10,000	10	15.0	1,800 x 4,000 x 1,000
PRO 1100BW	11,000	11	15.0	1,800 x 4,000 x 1,000
PRO 1200BW	12,000	12	15.0	1,800 x 5,000 x 1,000
PRO 1300BW	13,000	13	15.0	1,800 x 6,000 x 1,000
PRO 1400BW	14,000	14	15.0	1,800 x 5,000 x 1,000
PRO 1500BW	15,000	15	18.5	1,800 x 5,000 x 1,000
PRO 2000BW	20,000	21	18.5	1,800 x 6,000 x 1,200
PRO 2500BW	25,000	26	30.0	1,800 x 6,000 x 1,200*
PRO 3000BW	30,000	29	30.0	1,800 x 6,000 x 1,200*
PRO 4000BW	40,000	42	45.0	1,800 x 7,000 x 1,200*
PRO 5000BW	50,000	51	60.0	1,800 x 7,000 x 1,200*

* separate cleaning tank

On request, these plants can also be supplied with different membrane types for other salt rejection, and with measurement and control equipment (conductivity, redox potential, pH measurement) and dosing equipment (in pretreatment and post-treatment).

5 Membrane Technology

5.7.4 Dulcosmose® Reverse Osmosis Plants, SW Range

This range is the standard model for modern sea water desalination. Equipped with the latest generation of “high rejection low-pressure” membranes, these plants achieve maximum permeate capacity at moderate operating pressures, so ensuring reduced investment and running costs. The SW range of reverse osmosis plants is piped in PVC on the low-pressure side. Because of the high NaCl content, the system pipework on the high-pressure side is fabricated from extra high-grade, corrosion resistant stainless steel, type DIN 1.4539. Stainless steel pipework systems are welded under shielding gas and root gas atmospheres (TIG) and then passivated in our own pickling bath.

In addition these plants are equipped with integrated semi-automated cleaning system and all permeate and raw water flushing options as standard. As an option, the plants can be equipped with a system for energy recovery from the concentrate stream, where the latest generation of pressure exchangers are used.

The SW range was designed for the following values in the feed water:

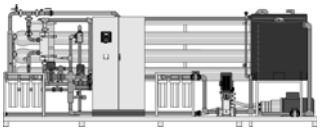
pk_7_074

salt content max.	40,000 mg/l*
pH range	3.0 … 10.0
silt density index max.	3
free chlorine max.	0.1 mg/l
total Fe, Mn max.	0.2 mg/l
total hardness max.	water must be chemically stabilised
bacteria count max.	100 KBE/ml
turbidity max.	0.5 NTU
COD max.	5 mg/l**

* differing salinities affect the performance data accordingly

** as O_2

Plants with 4“ and 8“ membranes, salt rejection of the plants 99 %

Plant	Permeate capacity at 25 °C water temperature	Number of 4″ and 8″ membranes	Connected load without energy recovery	Connected load with energy recovery	Dimensions H x W x D
	l/h	No.	kW	kW	mm
PRO 0078SW	780	6	5.5		1,800 x 3,500 x 1,000
PRO 0185SW	1,850	3	15.0		1,800 x 4,000 x 1,000
PRO 0240SW	2,400	4	15.0		1,800 x 4,000 x 1,000
PRO 0300SW	3,000	5	18.5	11.2*	1,800 x 4,000 x 1,000
PRO 0360SW	3,600	6	18.5	14.7*	1,800 x 4,000 x 1,000
PRO 0490SW	4,900	8	30.0	18.7*	1,800 x 5,000 x 1,200
PRO 0610SW	6,100	10	37.0	18.7*	1,800 x 6,000 x 1,200
PRO 0730SW	7,300	12	41.0	22.2*	1,800 x 5,000 x 1,400
PRO 0920SW	9,200	15	75.0	26.2*	1,800 x 6,000 x 1,500
PRO 0980SW	9,800	16	75.0	27.7*	1,800 x 5,000 x 1,500
PRO 1230SW	12,300	20	75.0	41.2*	1,800 x 6,000 x 1,500**
PRO 1470SW	14,700	24	90.0	48.2*	1,800 x 7,000 x 1,500**
PRO 1840SW	18,400	30	110.0	66.2*	1,800 x 7,000 x 1,500**
PRO 2210SW	22,100	36	132.0	90.0*	1,800 x 7,000 x 1,500**
PRO 2580SW	25,800	42	150.0	105.0*	1,800 x 7,000 x 1,500**
PRO 2900SW	29,000	48	180.0	105.0*	1,800 x 7,000 x 1,500**

* Energy recovery by pressure exchanger technology

** Separate cleaning tank

On request, these plants can also be supplied with different membrane types for other salt rejection, and with measurement and control equipment (conductivity, redox potential, pH measurement) and dosing equipment (in pretreatment and post-treatment).

6 Gravity Filter

Contents	Page

6.1 INTERFILT® SK 1

6 Gravity Filter

6.1 INTERFILT® SK

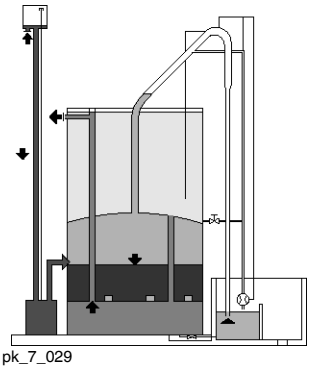

pk_7_029

Filtration is one of the most important basic technical processes in water treatment. It is a mechanical separation process in which suspended particles in water are retained in a filter layer (e.g. a layer of sand) through which water is passed.

Raw water is generally filtered through filtration plant using sand as the filter layer.

During the filtration process the pores in the filter layer become blocked by the contaminants removed from the raw water passing through it. This leads to a gradually increasing drop in pressure.

The “back washing phase” begins once the minimum permitted pressure level is reached in the “operating phase”. Here, the impurities are flushed out of the filter layer. During the operating phase, water passes downwards through the filter, during the back-washing phase, it travels back up through the filter layer.

The layer of sludge which has built up on the surface of the filter layer is broken up at the start of the back washing process, creating a fluidised bed.

The rotating motion of the grains of sand removes the dirt particles which have become attached to the surface of the granules and they are carried away from the filter with the rising flow of water.

ProMaqua has built up particular expertise in the field of filtration plant.

Open sand filters with differential pressure controlled back washing and integrated back washing water storage tank, offer significant advantages:

- No control equipment
  The filter uses no valves, flow meters, controllers or display equipment for filtration and back washing, or final-rinse functions, in other words, no moving parts.
- No pump
  The volume of water required for back washing is held in the storage area inside the filter, which means there is no need for a back washing pump.
- No compressed air, pressurised water or electrical power
  All processes are controlled and driven by the filter itself.
- No parts to maintain
  No moving parts means no wear.
- No operating personell
  The filter works fully automatically and requires no external intervention.

Design

The filtration plant consists of the following key elements:

- Cylindrical tank
- Internal fittings
- Automatic back washing system with injector
- Raw water inlet and feed tank
- Filter nozzles
- Filter material

Material: polyethylene PE-HD

Filter material: filter sands EN 12904, other filter materials on request

Applications

The (SK) Gravity Filter is suitable for practically all filtration tasks and its uses include, for example, partial flow cooling water filtration, river, industrial and potable water treatment, iron removal from well water, waste water purification to reduce suspended solids, COD - BOD_5 and phosphate content (4th purification stage) etc.

Optional additional equipment:

- Cover for the cylindrical tank
- Frost protection insulation with associated electric heating
- Combined air/water backwash
- Backwash water sump made from plastic PE-HD
- Other options on request

6 Gravity Filter

Technical Data

Type list and capacity data

Type	Filter diameter	Filter capacity	Back wash Water	Weight empty	Weight in operation
	mm	m^3/h	~ m^3	~ t	~ t
SK- 9	900	6.5	1.4	1.2	4.5
SK- 12	1,200	11.5	2.5	1.5	7.1
SK- 15	1,500	18.0	4.5	1.9	10.5
SK- 18	1,800	26.0	5.5	2.3	15.0
SK- 21	2,100	35.0	8.5	2.8	19.5
SK- 24	2,400	46.0	10.0	3.0	25.0
SK- 28	2,800	62.0	14.0	3.5	30.0

Flow rate:	3 … 10 m/h
Backwash intervals: (depending on type and amount of pollutants)	approx. 8 … 36 h
Head loss:	120 … 150 mbar
Clean water solids figure: (depending on raw water and filter material)	0 … 3 mg/l
Backwash flow rate::	
at the start	44 m/h
in the middle	37 m/h
at the end	30 m/h
Cylinder height: (same for all types)	4,500 mm
Overall height: depending on filter diameter	6,500 mm
Backwash and refilling time:	13 … 15 min.
Filter sand in accordance with EN 12904	
– Height of bed	600 mm
– Grain size range	0.71 … 1.25 mm
Filter nozzles:	
– Type	Lamellar nozzle
– Material	PPN
– Slot width	0.2 mm

As system components are produced individually according to application, we will inform you of prices on enquiry.

We reserve the right to change components and their construction, as long as these do not affect their performance or function.

Service
Sales

Heidelberg, January 2011

1 Service

You can make full use of our services even if you are not yet one of our customers. Our pre-sales services ensure that you get the optimum solution for your individual needs:

- Advice in choosing the products
- Application and process optimisation
- Project planning

However, our commitment does not end with delivery. We offer you a comprehensive after-sales service, which lasts for the entire service life of your equipment. That maximises your productivity and minimises your operating costs:

- Assembly/installation
- Commissioning
- Maintenance
- Spare parts service
- Repair
- Troubleshooting

Thanks to our worldwide presence in over 100 countries, our service is available wherever you need it.

1.1 Services

Mounting/installation

Quality starts with the correct installation of our systems. That's why we offer you a professional installation by trained service technicians.

We offer the following installation work:

- running pipelines in PE, PVC and PVDF materials
- carrying out electrical installation work
- linking the system to a PLC

If required, we also carry out conversions and plant extensions. Your advantage: plant and installation from a single source.

Commissioning: the right start for your system

Our service technicians will ensure professional system commissioning and start-up. You profit from knowing that the processes are set up correctly and the machine is running optimally from the very outset. Following successful commissioning, the service technician will provide information on the set system parameters and will train the system operators.

Maintenance: an essential requirement for consistently high reliability

Routine preventative maintenance performed by our service technicians increases operational reliability, lowers operating costs and extends the service life of your system. We offer maintenance contracts for this, individually tailored to your needs.

Repairs: on our premises or yours

Whether it's a works repair or an express job on site, you're assured of a professional repair using genuine spare parts.

Troubleshooting: If really something shouldn't work

Of course, queries on the operation of our products or systems do come up from time to time. Maybe the operation is not quite clear, or you'd like to the change the process, or make other modifications, perhaps one of our products just isn't working correctly, for whatever reason at all. No problem. Our technical advisers will be pleased to help you. In most cases, your query can be answered over the telephone.

If that's not possible, our adviser will take the necessary steps to help you as quickly as possible. This can be by sending in a service technician, despatch of spare or replacement parts, or other measures, depending on the situation.

1 Service

1.2 Service Contacts

For customers from Germany:

Some services are rendered by ProMaqua GmbH.

Services	Telephone +49 6221 6489-	Fax +49 6221 6489-	eMail
Mounting/installation	-402	-400	service@promaqua.com
Commissioning	-402	-400	service@promaqua.com
Maintenance	-402	-400	service@promaqua.com
On-site repair	-402	-400	service@promaqua.com

Repairs	Telephone +49 6221 842-	Fax +49 6221 842-	
for postcode areas 0 ... 4	-328	-441	CustomerCare@prominent.de
for postcode areas 5 ... 9	-308	-441	CustomerCare@prominent.de

For customers from other countries:

Please contact your local ProMinent branch or agency.

1.3 Training

The training programme offered by the ProMinent Academy for Water Technology is targeted at customers resident in Germany. We would kindly ask customers from other countries to contact their local ProMinent branch office or agency, the website addresses of which can also be found at “Company – Locations” ,either for the purpose of contacting them or to obtain further information.

Our extensive range of courses provides you with the opportunity to efficiently obtain information and knowledge about our units, familiarise yourself with new units and exchange information.

The courses are split into free subject seminars and intensive courses for which a charge is made. The subject seminars offer all process managers, planners, plant engineers and plant constructors the opportunity to familiarise themselves with the full ProMinent product range across all sectors. Specialised subject seminars on the drinking water and swimming pool sectors and on legionella prevention are also offered.

The intensive seminars are intended for all users from operational, maintenance and service fields who would like to gain more in-depth practical experience with specific ProMinent units. As well as workshops on metering pumps, we also offer workshops on measuring and control equipment, Bello Zon® chlorine dioxide plants and DVGW-certified (German Gas and Water Association) Dulcodes UV systems.

All training courses are held in our Seminar Centre in Heidelberg, equipped with the very latest media equipment and two practical training rooms. We limit the numbers on each course to 15 to enable us to deal with customers' needs individually and as comprehensively as possible. We would be pleased to arrange individual seminar dates or on-site sessions for you by prior agreement for a group of 5 participants or more.

1.4 Training Contacts

Detailed information on the current training programme is available on our website (www.prominent.com) under "Service" or directly from our training department.

Address:	ProMinent Dosiertechnik GmbH ProMinent Academy for Water Technology Im Schuhmachergewann 5-11 69123 Heidelberg
Training Manager:	Dr. Klaus Fuchs
Telephone:	06221 842-318 Administrative office 06221 842-0 (Main reception)
Fax:	06221 842-453 Administrative office
E-mail:	training@prominent.com

For customers from other countries:

Please contact your local ProMinent branch office or agency.

2 Sales

2.1 The ProMinent Group

Head Office

ProMinent Dosiertechnik GmbH
Im Schuhmachergewann 5-11
69123 Heidelberg · Germany
info@prominent.com
www.prominent.com

Telephone: +49 6221 842 **-0**
Fax: +49 6221 842 **-433 Management**
-617 Sales Chemical Fluid Handling
-419 Exports
-220 Purchasing
-435 Research and Development
-627 EDP/Technical/Legal
-432 Advertising
+49 6221 6489 **-400 Sales ProMaqua**

Affiliated Companies In Europe

ProMinent Dosiertechnik Ges. mbH **(Austria)**
Tel.: +43 7448 30400
office@prominent.at
www.prominent.at

ProMinent Belgium S.A., N.V. **(Belgium)**
Tel.: +32 2 3914280
info@prominent.be
www.prominent.be

ProMinent Fluid Controls BG **(Bulgaria)**
Tel.: +359 2 9455303
office@prominent.bg
www.prominent.bg

ProMinent Dosiertechnik CS s.r.o. **(Czech Republ.)**
Tel.: +420 585 757011
info@prominent.cz
www.prominent.cz

ProMinent Dosiertechnik CS s.r.o. **(Czech Republ.)**
Tel.: +420 251 55 1228
praha@prominent.cz
www.prominent.cz

ProMinent Systems spol. s.r.o. **(Czech Republ.)**
Tel.: +420 378 227 100
info@prominentsystems.cz
www.prominentsystems.cz

ProMinent Finland OY **(Finland)**
Tel.: +358 9 4777890
prominent@prominent.fi
www.prominent.fi

Flow Center Oy **(Finland)**
Tel.: +358 9 2513 7700
sales@flowcenter.fi
www.flowcenter.fi

ProMinent France S.A. **(France)**
Tel.: +33 3 88101510
contact@prominent.fr
www.prominent.fr

Syclope Electronique **(France)**
Tel.: +33 05 59337036
syclope@syclope.fr
www.syclope.fr

ProMinent Doserteknik AB **(Sweden)**
Tel.: +46 31 656600
info@prominent.se

ProMaqua GmbH **(Germany)**
Tel.: +49 6221 6489-0
info@promaqua.com
www.promaqua.com

ProMinent Fluid Controls (UK) Ltd. **(Great Britain)**
Tel.: +44 1530 560555
sales@prominent.co.uk
www.prominent.co.uk

ProMinent Hellas Ltd. **(Greece)**
Tel.: +30 210 5134621
info@prominent.gr
www.prominent.gr

ProMinent Magyarország Kft. **(Hungary)**
Tel.: +36 96 511400
prominent@prominent.hu
www.prominent.hu

ProMinent Fluid Controls Ltd. **(Ireland)**
Tel.: +353 71 9151222
info@prominent.ie
www.prominent.ie

ProMinent Italiana S.R.L. **(Italy)**
Tel.: +39 0471 920000
info@prominent.it
www.prominent.it

ProAcqua **(Italy)**
Tel.: +39 0464 425222
info@proacqua.it
www.proacqua.it

Idrosid s.r.l. **(Italy)**
Tel.: +39 0461 534623
info@idrosid.it
www.idrosid.it

ITECO s.r.l. **(Italy)**
Tel.: +39 0461 242220
iteco@itecoitalia.com
www.itecoitalia.com

ProMinent Office Lithuania **(Lithuania)**
Tel.: +370 37 325115
prominent1@takas.lt

ProMinent Fluid Controls Ltd. **(Malta)**
Tel.: +356 21693677
info@pfc.com.mt
www.prominent.com.mt

www.prominent.se

ProMinent Verder B.V. **(Netherlands)**
Tel.: +31 30 6779280
info@prominent.nl
www.prominent.nl

Van den Heuvel Watertechnologie **(Netherlands)**
Tel.: +31 33 277 8600
info@vdhwater.nl
www.vdhwater.nl

ProMinent Dozotechnika Sp. z. o.o. **(Poland)**
Tel.: +48 71 3980600
prominent@prominent.pl
www.prominent.pl

ProMinent Iberia S.A. **(Portugal)**
Tel.: +351 21 9267040
prominent@prominent.pt
www.prominent.pt

ProMinent Verder S.R.L **(Romania)**
Tel.: +40 269 23 44 08
office@prominent.ro
www.prominent.ro

ProMinent Dosiruyushaya Technika LLC **(Russia)**
Tel.: +7 495 708 4885
info@prominent.ru
www.prominent.ru

ProMinent (Scotland) Ltd. **(Scotland)**
Tel.: +44 1698 424353
bfinlay.sco@prominent.co.uk
www.prominent.co.uk

ProMinent Slovensko s.r.o. **(Slovak. Republ.)**
Tel.: +421 2 48200111
prominent@prominent.sk
www.prominent.sk

Bombas Boyser, S.L. **(Spain)**
Tel.: +34 938447778
bombas@boyser.com
www.boyser.com

ProMinent Iberia S.A. **(Spain)**
Tel.: +34 972 287011
prominent@prominent.es
www.prominent.es

2 Sales

Tomal AB **(Sweden)**
Tel.: +46 0 346-713100
info@tomal.se
www.tomal.se

ProMinent Dosiertechnik AG **(Switzerland)**
Tel.: +41 44 8706111
info@prominent.ch
www.prominent.ch

Voney AG **(Switzerland)**
Tel.: +41 031 992 21 67
www.voney-ag.ch

ProMinent Office Ukraine **(Ukraine)**
Tel.: +380 44 576 1855
prominen@i.com.ua

Affiliated Companies Worldwide

ProMinent Algeria **(Algeria)**
Tel.: +213 21 694307
prominent_algerie@yahoo.fr
www.prominent.fr

ProMinent Argentina S.A. **(Argentina)**
Tel.: +54 11 47654521
info-ar@prominent.com

ProMinent Fluid Controls Pty. Ltd. **(Australia)**
Tel.: +61 2 94500995
sales@prominentfluid.com.au
www.prominentfluid.com.au

ProMinent Brasil Ltda. **(Brazil)**
Tel.: +55 11 43610722
prominent@prominent.com.br
www.prominent.com.br

ProMinent Fluid Controls Ltd. **(Canada)**
Tel.: +15 19 8365692
info@prominent.ca
www.prominent.ca

ProMinent Chile **(Chile)**
Tel.: +56 2 3354 799
prominent@prominent.cl
www.prominent.cl

ProMinent Fluid Controls China Co. Ltd. **(P.R. of China)**
Tel.: +86 411 87315738
info@prominent.com.cn
www.prominent.com.cn

Heidelberg ProMinent Fluid Controls **India Pvt. Ltd. (India)**
Tel.: +91 80 23578872
prominent@hpfcindia.com
www.prominentindia.com

ProMinent Co. Ltd. **(Japan)**
Tel.: +81 3 5812 7831
info@prominent.co.jp
www.prominent.co.jp

ProMinent Korea Co. Ltd. **(Republic of Korea)**
Tel.: +82 (31) 895 2000
info@prominent.co.kr
www.prominent.co.kr

ProMinent Office Kazakhstan **(Kazakhstan)**
Tel.: +7 7272 504130
prominent@ducatmail.kz

ProMinent Fluid Controls (M) Sdn. Bhd. **(Malaysia)**
Tel: +603 806 825 78
info@pfc-prominent.com.my
www.pfc-prominent.com.my

ProMinent Fluid Controls de México, S.A. de C.V. **(Mexico)**
Tel.: +52 442 2189920
ventas@prominent.com.mx
www.prominent.com.mx

ProMinent Fluid Controls (Far East) Pte. Ltd. **(Singapore)**
Tel.: +65 67474935
pfc@prominent.com.sg
www.prominent.com.sg

ProMinent Fluid Controls Pty. Ltd. **(South Africa)**
Tel.: +27 11 323 5000
jock.bartolo@prominent.co.za
www.prominent.co.za

ProMinent Fluid Controls (Taiwan) Ltd. **(Taiwan)**
Tel.: +886 7 8135122
richard@prominent.com.tw
www.prominent.com.tw

ProMinent Fluid Controls (Thailand) Co. Ltd. **(Thailand)**
Tel.: +66 2 3760008
pfc@prominent.co.th
www.prominent.co.th

ProMinent Tunesia **(Tunisia)**
Tel.: +216 1311809
nbaroudi@prominent.fr
www.prominent.fr

Aquatrac Instruments, Inc. **(USA)**
Tel.: +1 800 909 9283
support@aquatrac.com
www.aquatrac.com

ProMinent Fluid Controls, Inc. **(USA)**
Tel.: +1 412 7872484
sales@prominent.us
www.prominent.us

ProMinent Juffali FZC **(United Arab Emirates)**
Tel.: +971 655 72626
info@prominentfzc.ae
www.prominent-juffali.ae

Distributors Worldwide

Angola
Bahrain
Bolivia
Botswana
Cameroon
Colombia
Costa Rica
Croatia
Cuba
Cyprus
Denmark
Ecuador
Egypt
El Salvador
Ethiopia
Ghana
Guatemala
Hong Kong
Indonesia
Iceland
Iran
Ireland
Israel
Jordan
Kenya
Kuwait
Macedonia
Malta
Mauritius
Montenegro
Mozambique
Namibia
New Zealand
Nigeria
Norway
Oman
Pakistan
Panama
Paraguay
Peru
Philippines
Qatar
Saudi Arabia
Serbia
Slovenia
Sudan
Syria
Tanzania
Tunisia
Turkey
Turkmenistan
UAE
Uganda
Uruguay
Venezuela
Vietnam
White Russia
Zambia
Zimbabwe

Addresses of distributors are available from ProMinent Dosiertechnik GmbH · Im Schuhmachergewann 5-11 · 69123 Heidelberg · Germany

2 Sales

2.2 General Terms And Conditions Of Delivery

The valid General Terms and Conditions, which can be viewed on the ProMinent homepage, become material part of the contract.

I. Scope of application

(1) **The present terms and conditions of delivery shall apply exclusively; deviating conditions or conditions contrary of the customer shall only apply provided the supplier approved of this in writing.**

(2) **The present General Terms andConditions of Delivery shall also apply to subsequent orders and to replacement parts deliveries without necessitating repeated pointing out of this fact.**

(3) **Supplements and representations as wellas modifications or amendments to acontract concluded in writing or by telex must be in writing.**

II. Offer and order confirmation

(1) Offers shall only be binding provided a time-limit for acceptance is stated in the offer. To be legally binding, offers shall require the written confirmation of the supplier.

(2) The supplier reserves any titles to and copyrights in figures, drawings, calculations, and other offer documentation and similar information of physical and non-physical type - also in electr nic form; these may only be disclosed to third parties on the supplier's written approval and shall be immediately returned to the supplier on request if no order is awarded to the supplier.

III. Scope of deliveries and services

(1) The deliveries and services are determined based on the mutual written declarations. If no such declarations exist, the written order confirmation of the supplier shall be decisive. For mere sales contracts, the agreed upon delivery provisions shall be interpreted according to the INCOTERMS valid at the conclusion of the contract.

(2) Data in brochures, catalogues or general technical documentation shall only be binding if reference is made to them in writing.

(3) The costs for an agreed mounting and assembly, including all and any required ancillary costs such as travel expenses or costs for the transport of tools or personal luggage shall be remunerated separately by the customer, if not otherwise agreed upon.

(4) If software is part of the delivery scope, the customer shall be granted a non-exclusive right of use in the software. The customer may copy or edit the software only in the legally permissible scope.

(5) Partial deliveries shall be permissible, provided it is reasonable for the customer, considering the interests of both the supplier and the customer.

(6) In case of deliveries abroad, the supplier's obligation shall be under the proviso that any necessary export licences are granted.

IV. Prices and terms of payment

(1) All prices shall be in EURO unless otherwise stated. They shall apply to mere delivery transactions "ex works" (EXW), exclusive of packaging.

(2) The prices do not include any turnover tax. This tax is itemised separately in the invoice in the statutory amount applicable at the date of invoicing.

(3) The deduction of discounts shall require a special agreement in writing.

(4) If not otherwise shown in the order confirmation, the sales price shall be due for payment 30 days from invoice date without any deduction.

(5) If the customer does not comply with the date for payment, the customer shall pay default interest in the amount of 8 percentage points above the base interest rate pursuant to §247 German Civil Code from the due date. Payment of further damages remains reserved.

(6) If not otherwise agreed upon, the delivery of goods for deliveries abroad shall be under the proviso that an irrevocable commercial letter of credit is issued by the customer in favour of the supplier, and confirmed by a German banking institution.

(7) In case of delayed payment, the supplier may suspend the performance of his own obligations until total payment was received, giving written notice to the customer.

(8) The customer may only set off claims orassert a right of retention, provided these areundisputed or have become non-appealable.

V. Time-limits for deliveries or services

(1) With regard to time-limits, the mutual written declarations or, in the absence of such declarations, the written order confirmation of the supplier shall be decisive. The timelimit shall be deemed observed, provided all and any documentation to be provided by the customer are received in time, and all and any required permits, releases, in particular plans, are provided, and the agreed upon terms of payment and other obligations are met by the customer. If these prerequisites are not met in time, the time-limit shall be prolonged reasonably; this shall not apply if the supplier is responsible for the delay.

(2) If non-observance of the time-limits is the result of force majeur, e.g. mobilization, war, riot or similar events, e.g. strike or lock-out, the agreed upon time-limits shall be prolonged reasonably.

(3) If mounting and assembly are not part of the agreed upon services, the time-limit shall bedeemed observed if the goods ready for operation were shipped or collected within the time-limit. Should the delivery be delayed for reasons for which the customer is responsible, the time-limit shall be deemed observed upon notification of readiness for shipment.

(4) If the supplier is responsible for the nonobservance of the time-limit, the customer, provided the customer suffered an actual loss, may request compensation for delay for each full week of delay of a maximum of 0.5%, however, not exceeding 5% of the price for the part of the delivery which could not be taken into relevant operation because of the delay. Claims for compensation of the customer exceeding the limits stipulated in item 5.4 shall be excluded in all cases of delayed delivery or service, also after expiry of any grace period set to the supplier. This shall not apply to the extent mandatory liability exists in cases of intent, gross negligence or personal injury; a shift of the burden of proof to the disadvantage of the customer is not given in this case.

(5) The customer's right to withdraw after ineffectual expiry of a grace period for the supplier shall remain unaffected. The grace period, however, must be reasonable and amount to at least four weeks.

(6) If shipment or delivery are delayed for more than one month after notice of readiness for shipment on the customer's request, warehouse charges in the amount of 0.5% of the price of the delivery goods, however, not exceeding a total of 5%, may be charged to the customer for each month started. The parties to the contract shall remain free to furnish proof of higher or lower warehouse charges.

VI. Passage of utility and risk; insurance; packaging

(1) The risk of deliveries and services rendered by the supplier shall pass to the customer as follows, even in case of deliveries freight paid.

a) for deliveries without mounting or assembly, even in case of partial deliveries, if these have been shipped or collected. Shipments shall be insured by the supplier against the usual transport risks upon wish and at the expense of the customer. If such insurance exists, the supplier shall be immediately notified about any damages to goods in transit.

b) for deliveries with mounting or assembly on the day of acceptance in the customer's operations or, if agreed upon, after perfect test operation.

(2) If the shipment, delivery, start, performance of mounting or assembly, acceptance in the customer's operations or test operation is/ are delayed for reasons attributable to the customer or if the customer delays acceptance for other reasons, the risk shall pass to the customer.

(3) The shipment is in principle made in standard packagings of the supplier. The latter shall be entitled to choose special types of packaging deemed necessary in the supplier's discretion. The costs of these packagings shall be borne by the customer.

VII. Mounting and assembly

The mounting, assembly and installation of the equipment and devices of the supplier may only be performed by specialists, observing the supplier's guidelines and the applicable technical standards. If mounting and/ or assembly are performed by the supplier, the following provisions shall apply, if not otherwise agreed upon in writing:

(1) The customer shall assume and provide in time at the customer's expense:

a) all earthwork, construction work and other different ancillary work, including therequired specialists and auxiliary staff, materials and tools,

b) the commodities and materials such as scaffolds, cranes and elevators and other devices, fuels, lubricants, and chemicals required for assembly and commissioning,

c) energy and water at the site of use, including connections, heating, and illumination,

d) sufficiently large, suitable, dry and lockable rooms at the assembly site for storing machine parts, fixings, materials, and tools etc., and suitable working and recreation rooms for the assembly staff, including appropriate sanitary installations. For the protection of the supplier's property and the assembly staff, the customer shall also take the measures he normally would take to protect his own property.

e) protective clothing and protective devices which are necessary because of special circumstances at the assembly site.

(2) Prior to the start of the assembly work, the customer shall unsolicitedly provide the re-

quired information about the position of subsurface energy, gas, water conduits or similar installations as well as the required data on statics.

(3) Prior to the start of mounting or assembly, the additions and objects required to start the work must be at the mounting or assembly site and all preparations prior to start of the installation must be advanced such that the mounting or assembly can be started as agreed upon and can be performed without any interruptions. Access routes and the mounting or assembly site must be flattened and clear of any objects.

(4) Should mounting, assembly or commissioning be delayed for reasons beyond the control of the supplier, the customer shall bear the costs for waiting time and additionally required travels of the supplier or the assembly staff in an adequate amount.

(5) If a plant cannot be installed immediately after delivery, the customer shall be responsible for a proper storage according to the supplier's guidelines.

(6) The customer shall provide the supplier with weekly information on the duration of the working hours of the assembly staff and shall immediately confirm the completion of mounting, assembly or commissioning.

(7) The commission may only be performed by technicians acknowledged by the supplier and according to the supplier's instructions. The technicians shall be entitled to refuse commissioning of the plant if the operating conditions to be provided by the customer do not guarantee a safe operation of the plant. The customer shall bear the costs of any delay in commissioning incurred to the supplier.

(8) Should the supplier request acceptance of the deliveries and services after completion, the customer shall be obliged to do so within two weeks. Otherwise, the acceptance shall be deemed made. The acceptance shall be deemed made, too, if the delivery goods and services - also after completion of an agreed test phase, if any - have been taken in use.

VIII. Warranty

(1) Should goods delivered or services rendered by the supplier prove to be defective because they do not possess the agreed quality or because they are not suitable for the agreed or usual use, the supplier shall in its discretion either remedy the parts or services concerned or deliver or render them again at no cost within the limitation period, provided the cause of the defect already existed at the time of risk passing.

(2) Claims for material defects become statuebarred after 12 months, for ProMinent® pump drives and DULCOMETER® controllers the period is 24 months. The time-limit shall start with passing of the risk (item 6). The above provisions shall not apply to the extent the law mandatorily prescribes longer time-limits according to §§438(1) no. 2 German Civil Code (goods for edifices), §479(1) German Civil Code (right of recourse), and §634a German Civil Code (structural defects). The warranty period may be prolonged up to 60 months in suitable cases, provided the customer concludes a maintenance contract for the corresponding period.

(3) The customer shall immediately give notice of defects to the supplier.

(4) In the event of notices of defects, payments of the customer may be retained in the volume which shows a reasonable ratio to the material defects incurred. The customer may retain payments only if a notice of defect is given whose justification is beyond doubt. If the notice of defect is given wrongfully, the supplier shall be entitled to request from the customer compensation for the expenses incurred to the supplier.

(5) At first, the supplier shall always be given the opportunity to post-perform within a reasonable time-limit. The customer shall grant the supplier the time and opportunity required to do so. Should the customer refuse this, the supplier shall be exempted from the liability for defects.

(6) If the post-performance fails, the customer - notwithstanding possible claims for damages - may withdraw from the contract or reduce the compensation. The customer may not claim compensation for futile expenses.

(7) Claims for defects do not exist in case of minor deviations from the agreed or assumed quality, minor impairment of usability, natural wear or damages incurred after passing of the risk because of incorrect or negligible handling, excessive use, unsuitable operating material, faulty construction work, unsuitable subsoil or because of special external influences which are not established in the contract as well as in case of non-reproducible software errors. If the customer or third parties perform improper modifications or repair work, no claims for defects will exist for these and the resulting consequences.

(8) The supplier shall not bear the additional expenditure, in particular transport, travelling, labour and material costs, which result from the fact that the subject matter of the delivery was later transported to a different location than the customer's branch or the original place of destination, except the transport corresponds to its proper use.

(9) In all cases, the customer shall be obliged to take any possible and reasonable steps to keep the expense for the purpose of postperformance as small as possible. The supplier shall participate in the costs for a recall campaign only if this is necessary based on the factual and legal situation. The customer shall be obliged to either return defective products or keep them ready for inspection and tests, in the supplier's discretion.

(10) Claims for recourse of the customer against the supplier shall only exist to the extent the customer did not conclude any agreements with the customers' purchaser which exceed the statutory claims for defects. In addition, item 8.8 shall apply correspondingly to the scope of the right for recourse of the customer against the supplier.

(11) Furthermore, item 11 (Other claims for damages) also applies to claims for damages. More extensive or other claims than stipulated in the present item 8 of the customer against the supplier and its persons employed in performing the obligations because of a material defect shall be excluded.

IX. Industrial property rights and copyright; defects of t i t l e

(1) If not otherwise agreed upon, the supplier shall be obliged to render the delivery free of any industrial property rights and copyrights of third parties (hereinafter called: property rights) solely in the country of the place of delivery. To the extent a third party makes justified claims against the customer because of infringement of property rights by deliveries rendered by the supplier and used according to contract, the supplier shall be liable to the customer within the time-limit stipulated in item 8.2 as follows:

a) The supplier shall at the supplier's expense and in the supplier's discretion either obtain a right of use for the deliveries concerned, modify them such that the property right is not infringed or exchange them. Should the supplier not be able to do so under reasonable conditions, the customer shall be entitled to statutory cancellation or reduction rights. The customer may not claim compensation for futile expenses.

b) The supplier's obligation to pay damages shall be subject to item 11.

c) The above mentioned obligations of the supplier shall only be given provided the customer immediately informs the supplier in writing about claims asserted by third parties, refuses to acknowledge an infringement, and all and any measures of protection and settlement proceedings remain reserved to the supplier. Should the customer discontinue the use of the delivery goods for the purpose of reducing the damage or for other reasons, the customer shall be obliged to inform the third party about the fact that the discontinuance of use does not represent an acknowledgement of the property rights infringement.

(2) Claims of the customer shall be excluded to the extent the customer is responsible for the property rights infringement.

(3) Claims of the customer shall furthermore be excluded to the extent the property rights infringement was caused by special standards stipulated by the customer, by use not foreseeable by the supplier or by the fact that the delivery goods were modified by the customer or used in conjunction with products not delivered by the supplier.

(4) In the event of property rights infringements, the claims of the customer stipulated in item 9.1 a) shall apply, in addition the provisions in item 8.4, item 8.5, and item 8.10 shall apply correspondingly. In case of other defects of title, the provisions of item 8 shall apply correspondingly.

(5) More extensive or other claims than stipulated in the present item 9 of the customer against the supplier and its persons employed in performing the obligations because of a defect of title shall be excluded.

X. Impossibility; adaptation of contract

(1) To the extent the delivery is not possible, the customer shall be entitled to claim damages, except the impossibility is attributable to the supplier. The customer's claims for damages, however, shall be limited to 10% of the part of the delivery which cannot be taken into relevant operation because of the impossibility. This limitation shall not apply to the extent mandatory liability exists in cases of intent, gross negligence or personal injury; a shift of the burden of proof to the disadvantage of the customer is not given in this case. The customer's right to withdraw from the contract shall remain unaffected.

(2) In case of temporary impossibility, item 5 (Time-limits) shall apply.

(3) Should unforeseeable events in the sense of item 5.2 significantly change the economic meaning or the content of the delivery or have a significant effect on the supplier's operations, the contract shall be adapted in good faith. To the extent this is not economically reasonable, the supplier shall be entitled to withdraw from the contract. If the supplier intends to assert this right to withdraw, the supplier, after having obtained knowledge about the scope of the event, shall immediately inform the customer to this effect. This shall also apply if a prolongation of the delivery period was agreed upon with the customer at first.

XI. Other claims for damages

(1) Any claims for damages and reimbursement of expenses the purchaser may have due to the infringement of primary or collateral duties resulting from the relationship under the law of obligation, from unauthorized action or any other legal reasons, shall be excluded.

(2) For all products with network connection, the risk of loss or data alteration and the risk of faulty data transmission will be passed to the customer as soon as the first network interface related to the product is crossed. For software products, the risk of loss or data alteration and the risk of faulty data transmission will be passed to the customer as soon as the software is installed. Despite careful control of the data, ProMinent does not assume any liability for data entering the system of the customer or other systems via an open network interface.

(3) This exclusion does not apply when liability is imperative, e.g. according to the Product Liability Law (Produkthaftungsgesetz), for cases of intent, gross negligence or personal injuries, due to the warranty for the presence of a specific quality or the breach of material contractual obligations. Damage claims asserted on the basis of a breach of material contractual obligations shall be limited to foreseeable damages that are typical to the contract unless there is intent or gross negligence involved or the liability is based on physical injury or a warranty for the presence of a specific quality. No reversal of the burden of proof to the disadvantage of the purchaser is associated with the above provisions.

(4) Unless longer limitation periods are imperatively prescribed by law, all claims for damages shall be subject to the limitation periods mentioned in sub-paragraph 8.2.

XII. Warranty and product description

(1) Warranties shall only be effective if made in writing.

(2) Data described in catalogues, tender documentation and other printed matter as well as general advertising statements do not represent an offer for the conclusion of a warranty agreement.

XIII. Reservation of title

(1) The supplier reserves the title in the delivery goods (reserve goods) until the customer has made the complete payment due from the business relationship. The reservation of title shall also include the acknowledged balance, to the extent the supplier enters the claims against the customer in current account (current account reserve).

(2) If the supplier accepts return of the delivery goods, this shall mean a withdrawal from the contract. Upon return of the goods purchased, the supplier shall be entitled to realise these goods; the realisation proceeds shall be credited to the customer's obligations - minus reasonable realisation fees. In the event the delivery goods are attached, the supplier shall be entitled to withdraw from the contract without setting a time-limit. In case of attachment or other interventions by third parties, the customer shall immediately inform the supplier in writing for the supplier to be able to file action pursuant to §771 German Code of Civil Procedure. To the extent third parties are not able to reimburse the judicial and extrajudicial expenses of an action pursuant to §771 German Code of Civil Procedure to the supplier, the customer shall be liable for the loss incurred by the supplier

(3) The customer shall be entitled to resell the delivery goods in the proper course of business; however, the customer already now assigns to the supplier all and any claims in the amount of the final invoice amount, including value added tax, which are due to him from the resale against his purchaser or third parties, independent of the fact whether the delivery goods were resold without or after processing. The customer shall be entitled to collect this claim also after its assignment. The supplier's power to collect the claim himself remains unaffected; the supplier, however, agrees not to collect the claim as long as the customer meets his payment obligations properly and is not delinquent. In this case, the supplier may request the customer to disclose the assigned claims and their debtors, to provide the information required for collection, to provide the relevant documentation and to inform the debtor (third party) about the assignment.

(4) The processing and transformation of the delivery goods by the customer shall always be performed for the supplier. If the delivery goods are processed together with other objects not belonging to the supplier, the supplier shall obtain co-ownership in the new object in the proportion of the value of the delivery goods to the other processed objects at the time of processing. Otherwise, the same provisions as for reserve goods shall apply to the matter created by processing. The customer shall also assign to the supplier the claims for securing the supplier's claims which are due to the customer against a third party by joining the delivery goods with a real property.

(5) If the delivery goods are mixed inseparately with other objects not belonging to the supplier, the supplier shall obtain coownership in the new object in the proportion of the value of the delivery goods to the other mixed objects at the time of mixing. If the mixing is done such that the matter of the customer is to be deemed a main component, the parties agree that the customer shall assign to the supplier proportional co-ownership. The customer shall keep the sole property or coproperty for the supplier. The customer shall insure it in the usual scope against usual risks such as e.g. fire, theft, water, and similar. The customer shall already now assign to the supplier the customer's claims for compensation which are due to him from damages of the above mentioned type against insurers or other third parties, in the amount of the invoice value of the goods.

(6) If the realisable value of the securities due to the supplier exceed the supplier's total claims by more than 10%, the supplier shall be obliged to release in the supplier's discretion securities on request of the customer or a third party affected by the excessive security.

XIV. Repair conditions

(1) The ordering party (customer) agrees by means of a legally binding declaration (Declaration of Decontamination) that any devices or parts returned for repair or maintenance will be thoroughly cleaned in order to avoid any hazard to the independent contractor due to re-contamination. The devices must be sent to the supplier free of any flammable, toxic, caustic, noxious, irritant or any other substances detrimental to health. The Declaration of Decontamination must be affixed to the outside of the packaging used to return the devices. If no Declaration of Decontamination is affixed to the delivery, ProMinent has the right to refuse acceptance of the devices.

(2) If a cost estimate is prepared on order of the orderer, the costs incurred in this connection may be charged to the orderer, independent of the fact whether a repair order is issued subsequently or not. Because the search time for defects is working time, the time expended and to be proven shall be charged to the orderer if an order cannot be executed because:

a) the defect complained about could not be determined, observing the rules of technology;

b) the order was withdrawn while executing the order;

(3) The warranty period for all and any workmanship (repairs) as well as for built in material shall be six months. Otherwise, the warranty rules for suppliers and services from item VIII shall apply.

(4) The payment terms from item IV shall apply In addition, the following retention of title shall be agreed:

a) To the extent the replacement parts or similar built in during repairs do not become material components, the independent contractor shall reserve retention of title in these built in parts until the settlement of all and any claims of the independent contractor from the contract.

b) If the orderer delays in payment or does not meet the orderer's obligations from the retention of title, the supplier shall be entitled to request the return of the object for the purpose of removing the built in parts. All and any costs of the return and the removal shall be borne by the orderer.

c) If the repair is performed at the orderer's premises, the orderer shall give the supplier the opportunity to perform the removal at the orderer's premises. Labour and travel costs shall be at the expense of the orderer.

(5) The place of jurisdiction for all disputes arising from this contract shall be the place of business of the contractor, if the person ordering is a merchant. However, the contractor is also entitled to institute legal proceedings at the place of business of the person ordering.

XV. Place of jurisdiction and applicable law

(1) The place of jurisdiction for all and any disputes arising out of the present contract shall be the supplier's headquarters, provided the customer is a merchant: The supplier, however, shall be entitled to file action at the customer's headquarters.

(2) German law shall apply to the contractual relationships. The UN Convention on the International Sale of Goods (CISG) shall be excluded.

XVI. Severability

Should any individual provisions of the present contract be legally ineffective, the validity of the remaining provisions shall in no way be affected. This shall not apply if abiding by the contract would constitute an unreasonable hardship for the other party to the contract.

XVII. Terms and conditions for the participation in the exchange device programme

(1) The exchange device programme applies to pumps without Profibus interface and without self-ventilation as well as for amperometric sensors.

(2) The purchaser agrees with the participation in the exchange device programme that the device is assigned to ProMinent Dosiertechnik GmbH. By delivering the device, the ownership in the delivered devices shall pass on to ProMinent Dosiertechnik. In return, the purchaser shall receive a used, similar and at least equal device.

(3) Within the scope of each exchange process, a maximum of 5 exchange devices per customer may be ordered.

(4) Already exchanged devices can no longer participate in the exchange device programme.

(5) The warranty for exchange pumps shall be 6 months.

ProMinent Dosiertechnik GmbH

Valid 11/2009