5/2-way solenoid valve, monostable - Series NA

Product code: NA54N-15-02



Datasheet creation date: 10/12/2025 08:34

Check the most updated document online click here

TECHNICAL DATA

Mod.	NA54N-15-02

5/2-way solenoid valve, monostable - Series NA

Product code: NA54N-15-02

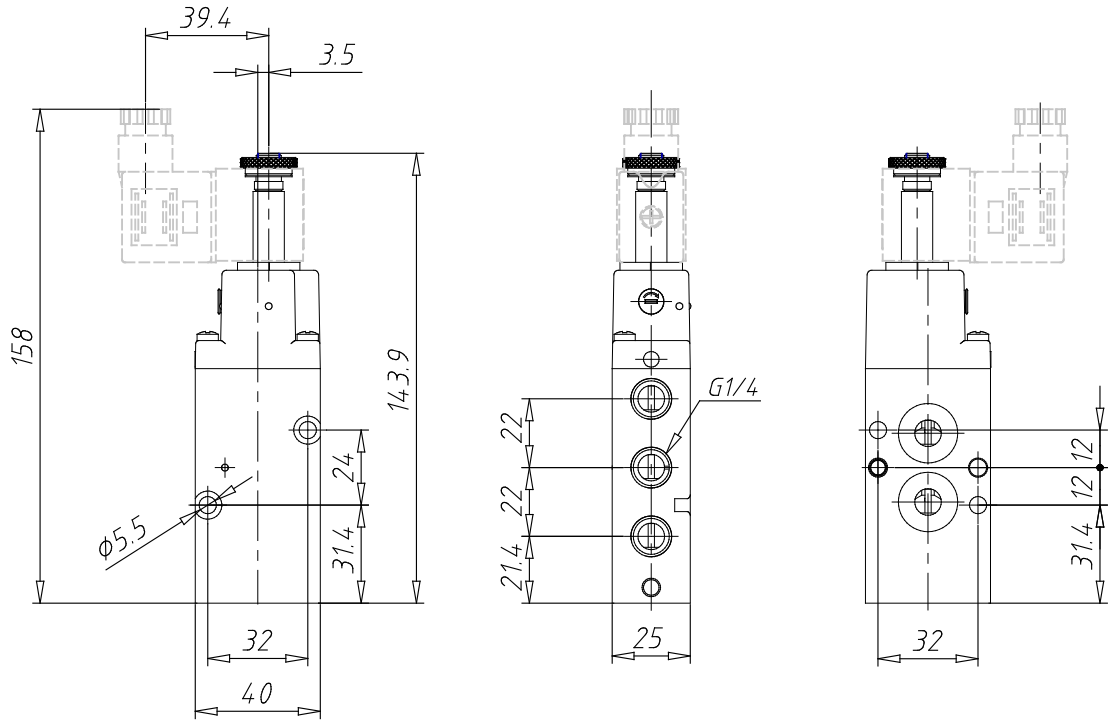

DIMENSIONS

Mod.	NA54N-15-02

Products designed for industrial applications. General terms and conditions for sale are available on www.camozzi.com.
This document contains a brief description of the products offered by Camozzi Automation at time of publication.
For more complete and up to date information about the Camozzi Automation product range, please refer to our online catalogue at https://shop.camozzi.com