DATASHEET

DOUBLE LEAVES HINGE 40409 ZI

DESCRIPTION:

This steel weld-on butt hinge from the RS PRO range is designed with durability in mind and can handle heavy loads for sustained periods of time. For this reason, its intended use is for mounting cabinets and door panels.

The hinge is constructed from two steel leaves, which are welded together. This tough metal ensures that the hinge is resistant to corrosion. This makes it a suitable option for use on interior and exterior doors.

Each hinge has 4 pre-chilled holes and a pin hinge that's riveted at both ends. The holes help with alignment and the mounting of furniture, while the pin helps fixing stay securely in place. As it's made from steel, the hinge also has a sleek finish which makes it a popular choice for cabinet makers looking to enhance a piece's aesthetic design.

FEATURES:

- Finish: Steel Zinc Plated
- Length of 75 mm
- Width of 90 mm
- Material thickness of 6 mm
- 10 mm diameter fixing holes
- Free swinging
- Weld-on fixing
- Hinge pin riveted at both ends

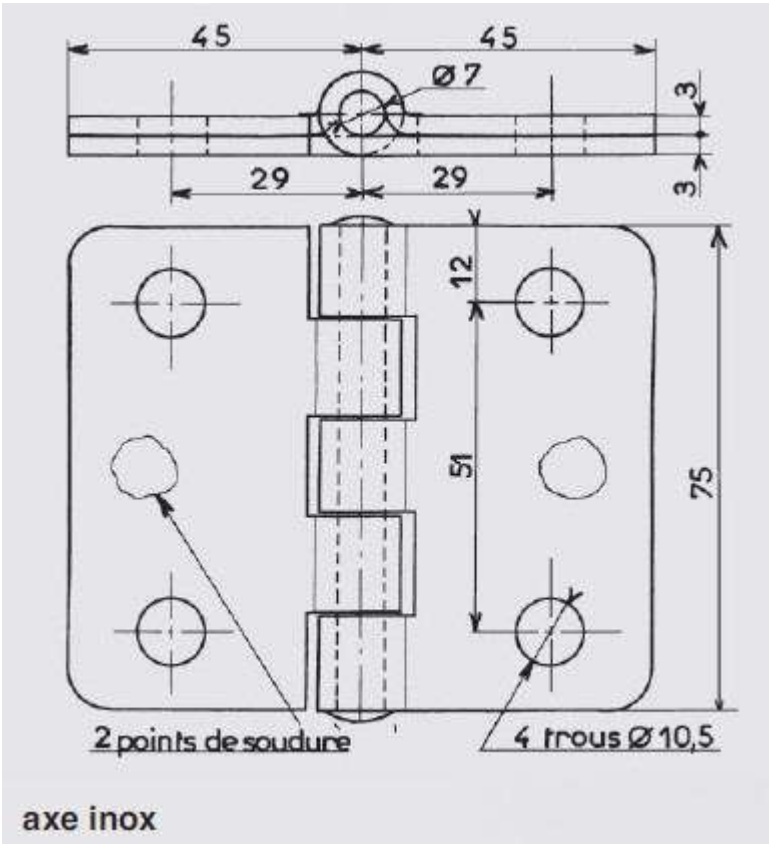

axe inox