Product Data Sheet
00813-0100-4702, Rev LA
August 2020

Rosemount™ 702 Wireless Discrete Transmitter



- An installation-ready solution that provides dual channel, discrete input, discrete output, or leak detection input options.
- Discrete single or dual switch input with logic for limit contact and opposing contact applications.
- Momentary inputs are continuously measured between wireless updates.
- Dual channels are each configurable for discrete input or discrete output.
- Self-organizing network delivers information rich data with >99 percent data reliability.

ROSEMOUNT™

EMERSON™

Emerson Wireless Solution

IEC 62591 (*Wireless*HART®) ... the industry standard

Self-organizing, adaptive mesh routing

- Backed by Emerson's proven experience in Wireless field instrumentation and expert technical support.
- The self-organizing, self-healing network manages multiple communication paths for any given device. If an obstruction is introduced into the network, data will continue to flow because the device has other established paths.

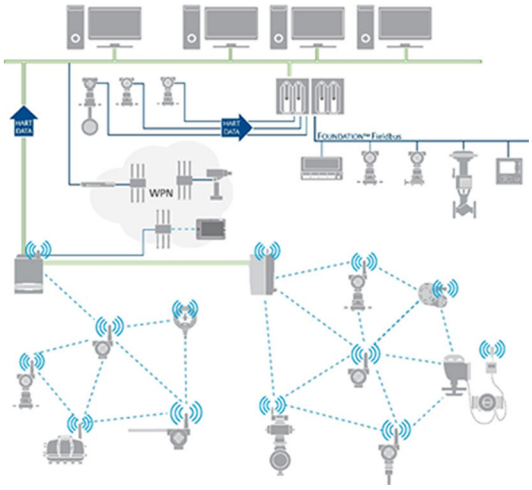

Reliable wireless architecture

- Standard IEEE 802.15.4 radios
- 2.4 GHz ISM band sliced into 15 radio-channels
- Time-synchronized channel hopping
- Direct sequence spread spectrum (DSSS) technology delivers high reliability in challenging radio environment

Emerson's Wireless

- Seamless integration to all existing host systems
- Native integration into DeltaV™ and Ovation™ is transparent and seamless
- Gateways interface with existing host systems using industry standard protocols including OPC, Modbus® TCP/IP, Modbus RTU, and EtherNet/IP™

Layered security keeps your network safe

- Ensures data transmissions are received only by the Wireless Gateway.
- Network devices implement industry standard Encryption, Authentication, Verification, Anti-Jamming, and Key Management.
- Third party security verification including Achilles and FIPS197, with password strength monitoring, user-based log in, password reset requirements, automatic lockout, password expiration requirements.

Contents

Emerson Wireless Solution 2
Ordering information 3
Specifications 8
Safety shower and eye wash monitoring 23
Product certification 25
Dimensional drawings 31

Ordering information

CONFIGURE > VIEW PRODUCT >

Online Product Configurator

Many products are configurable online using our Product Configurator. Select the **Configure** button or visit our website to start. With this tool's built-in logic and continuous validation, you can configure your products more quickly and accurately.

Specifications and options

See the Specifications and options section for more details on each configuration. Specification and selection of product materials, options, or components must be made by the purchaser of the equipment. See the Material selection section for more information.

Model code example

Model codes contain the details related to each product. Exact model codes will vary; an example of a typical model code is shown in Figure 1.

Figure 1: Model Code Example

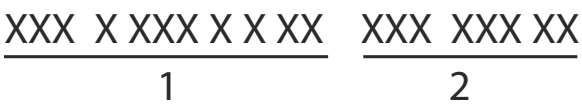

1. Required model components (choices available on most)
2. Additional options (variety of features and functions that may be added to products)

Required model components

Model

Code	Description	
702	Discrete transmitter	★

Transmitter type

Code	Description	
D	Wireless field mount	★

Output

Code	Description	
X	Wireless	★

Measurement

Code	Description	
32	Discrete dual input (dry contact), detects momentary inputs and counts	★
42	Discrete dual input or output, configurable	★
52	Plunger arrival detection (for use with ETC Cyclops Plunger Arrival Sensor)	★
61(1)	Liquid hydrocarbon detection (for use with TraceTek® sensing cable)	★

(1) *LCD display not available for option code 61.*

Housing

Code	Description	
D	Dual compartment housing – aluminum	★
E	Dual compartment housing – SST	★

Conduit threads

Code	Description	
1	½–14 NPT	★

Certification

Code	Description	Measurement option code	
I5	U.S.A. intrinsically safe, Non-incendive, and Dust ignition- proof	32, 52, 61	★
I6	Canada intrinsically safe	32, 52, 61	★
I1	ATEX intrinsically safe	32, 52, 61	★
IU	ATEX intrinsically safe for zone 2	32, 42, 52	★
I7	IECEx intrinsically safe	32, 52, 61	★
IY	IECEx intrinsically safe for zone 2	32, 42, 52	★
I4	TIIS intrinsically safe	32, 42, 52	★
I3	China intrinsically safety	32	★
N5	U.S.A. division 2, Non-incendive	32, 42, 52	★
N6	Canada division 2, Non-incendive	32, 42, 52	★
I2	INMETRO Intrinsically Safe	32, 52	★
IZ	INMETRO Intrinsically Safe for Zone 2	42	★
KQ	USA, Canada, ATEX Intrinsic Safety Combination	32	★
IM	Technical Regulations Customs Union (EAC) Intrinsic Safety	32	★
NM	ATEX Intrinsic Safety for Mining	32, 52	★
IP	Korea Intrinsically Safe	61	★
NA	No approval	32, 42, 52, 61	★

Wireless options

Wireless update rate, operating frequency and protocol

Code	Description	
WA3	User configurable update rate, 2.4 GHz DSSS, IEC 62591 (*Wireless*HART®)	★

Omni-directional wireless antenna and SmartPower Solutions

Black power module must be shipped separately, order Model 701PBKKF.

Code	Description	
WK1	External antenna, adapter for black power module (I.S. Power module sold separately)	★
WM1	Extended range, external antenna, adapter for black power module (I.S. Power module sold separately)	★
WJ1	Remote antenna, adapter for black power module (I.S. Power module sold separately)	
WN1(1)	High-gain, remote antenna, adapter for black power module (I.S. Power module sold separately)	

(1) *Limited availability, consult factory for details.*

Additional options

Extended product warranty

Code	Description	
WR3	3-year limited warranty	★
WR5	5-year limited warranty	★

Display

LCD display not available for option code 61.

Code	Description	
M5	LCD display	★

Mounting bracket

Code	Description	
B4	Universal L mounting bracket for two inch pipe mounting – SST bracket and bolts	★

Configuration

Code	Description	
C1	Factory configure date, descriptor, message fields, and wireless parameters	★

Cable gland

Code	Description	
G2	Cable gland (7.5–11.9 mm)	★
G4(1)	Thin wire cable gland (3–8 mm)	★

(1) *Thin wire cable gland is preferred for measurement option 61.*

Switches and kits

Code	Description	
SS01	Universal safety shower/eyewash kit with UL switches	★
SS02	Universal safety shower/eyewash kit for insulated pipe with UL switches	★
SS03	Universal safety shower/eyewash kit with CSA switches	★
SS04	Universal safety shower/eyewash kit for insulated pipe with CSA switches	★

Spare Parts and Accessories

Part number	Description
00702-9010-0001	Universal safety shower/eyewash kit with UL switches
00702-9010-0002	Universal safety shower/eyewash kit for insulated pipe with UL switches
00702-9010-0003	Universal safety shower/eyewash kit with CSA switches
00702-9010-0004	Universal safety shower/eyewash kit for insulated pipe with CSA switches
03151-9270-0003	Mounting Bracket Kit, SST

Specifications

Functional specifications

Discrete input

Single or dual SPST dry contacts, single SPDT dry contacts or leak detection. To maintain I.S. ratings, contacts must be limited to simple switches or leak detection only.

Switching threshold, measurement option code 32 and 42

Open > 100 K Ohm

Closed < 5 K Ohm

Momentary discrete input, measurement option code 32 and 42

Detects momentary discrete inputs of 10 millisecond or more duration. At each wireless update, device reports current discrete state and accumulating count of close-open cycles. Accumulating count registers from 0 to 999,999, then re-sets to zero.

Discrete output, measurement option Code 42

Maximum rating: 26 Vdc, 100 mA

On resistance: typical 1 Ohm

Wireless output

IEC 62591 (*Wireless*HART®) 2.4 GHz DSSS

Radio frequency power output from antenna

External (WK option) antenna: Maximum of 10 mW (10 dBm) EIRP

Extended range, external (WM option) antenna: Maximum of 18 mW (12.5 dBm) EIRP

Remote (WJ option) antenna: Maximum of 17 mW (12.3 dBm) EIRP

High-gain, remote (WN option) antenna: Maximum of 40 mW (16 dBm) EIRP

Local display

The optional integral LCD display can show discrete state and diagnostic information. Display updates at each wireless update.

Note
The option for a local display is not available with option 61, Liquid hydrocarbon leak detection.

Note
Reference conditions are 70 °F (21 °C), and routing data for three additional network devices.

Humidity limits

0–100 percent relative humidity

Wireless update rate, measurement option code 32, 42, 52

User selectable, 1 second to 60 minutes

Wireless update rate, measurement option code 61

User selectable, four seconds to 60 minutes

Wireless latching time, measurement option code 52

User selectable, 1 second to 10 minute

Physical specifications

Material selection

Emerson provides a variety of Rosemount products with various product options and configurations including materials of construction that can be expected to perform well in a wide range of applications. The Rosemount product information presented is intended as a guide for the purchaser to make an appropriate selection for the application. It is the purchaser's sole responsibility to make a careful analysis of all process parameters (such as all chemical components, temperature, pressure, flow rate, abrasives, contaminants, etc.), when specifying product, materials, options, and components for the particular application. Emerson is not in a position to evaluate or guarantee the compatibility of the process fluid or other process parameters with the product, options, configuration or materials of construction selected.

Electrical connections

Power Module

The Emerson SmartPower™ Power Module is field replaceable, featuring keyed connections that eliminate the risk of incorrect installation.

The power module is an Intrinsically Safe solution, containing Lithium-thionyl chloride with a polybutadine terephthalate (PBT) enclosure.

The transmitter has power module life time rating of 10 years with a one-minute update rate, at reference conditions.

Note

Reference conditions are 70 °F (21 °C) and routing data for three additional network devices.

Continuous exposure to ambient temperature limits (–40 or 185 °F; –40 or 85 °C) may reduce specified life by up to 20 percent.

Sensor terminals

Screw terminals permanently fixed to terminal block

Field Communicator terminal connections

Clips permanently fixed to terminal block, designated by the text "COMM."

Materials of construction

Enclosure

Housing:	low-copper aluminum, or stainless steel
Paint:	Polyurethane
Cover O-ring:	Buna-N
Terminal and power module pack	PBT
Antenna	PBT/PC integrated omni-directional antenna

Conduit entries

½–14 NPT

Weight

Low-copper aluminum

Rosemount 702 without LCD display - 4.6 lb. (2.0 kg)

Rosemount 702 with M5 LCD display - 4.7 lb. (2.1 kg)

Stainless steel

Rosemount 702 without LCD display - 8.0 lb. (3.6 kg)

Rosemount 702 with M5 LCD display - 8.1 lb. (3.7 kg)

Enclosure ratings (702)

NEMA® 4X and IP66/67

Mounting

Transmitters may be attached directly to switch, brackets also permit remote mounting. See Dimensional drawings for more information.

Performance specifications

Electromagnetic compatibility (EMC)

Meets all industrial environment requirements of EN61326 and NAMUR NE-21. Maximum deviation <1% span during EMC disturbance.(1)

Vibration effect

Wireless output unaffected when tested per the requirements of IEC60770-1 field or pipeline with high vibration level (10–60 Hz 0.21 mm displacement peak amplitude/60–2000 Hz 3 g).

Wireless output unaffected when tested per the requirements of IEC60770-1 field with general application or pipeline with low vibration level (10–60 Hz 0.15 mm displacement peak amplitude/60–500 Hz 2 g).

(1) During surge event device may exceed maximum EMC deviation limit or reset; however, device will self-recover and return to normal operation within specified start-up time.

Temperature limits

Description	Operating limit	Storage limit
Without LCD display	-40 to 185 °F -40 to 85 °C	-40 to 185 °F -40 to 85 °C
With LCD display	-4 to 175 °F -20 to 80 °C	-40 to 185 °F -40 to 85 °C

Wireless output specifications

Dry contact switch inputs, measurement option code 32, and 42

Terminal block connections

The transmitter has a pair of screw terminals for each of two channels, and a pair of communication terminals. These terminals are labeled as follows:

- CH1+: Channel one positive
- CMN: Common
- CH2+: Channel two positive
- CMN: Common
- COMM: Communication terminals

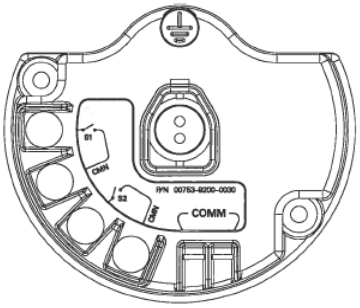

Single input or dual input independent

The transmitter will accept the input from one or two single pole single throw switches on inputs CH1 and CH2. The wireless output of the transmitter will be both a primary variable (PV) and a secondary variable (SV). The PV is determined by the CH1 input. The SV is determined by the CH2 input. A closed switch drives a TRUE output. An Open switch drives a FALSE output.

Note

Any dry contact input can be inverted by the device, so as to give the opposite effect. This is useful, for instance, if a normally open switch is used to replace a normally closed switch.

Figure 2: Single and Dual Input

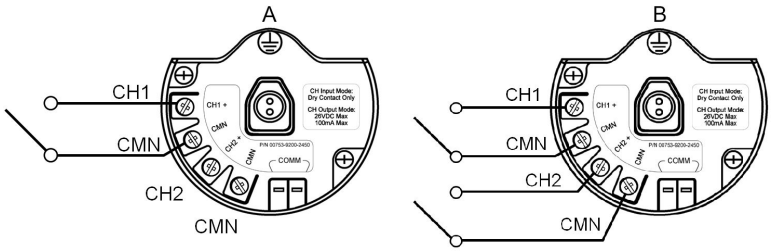

A. Single input
B. Dual input

Table 1: Single or Dual Input, No Logic

Switch input	Wireless output	Switch input	Wireless output
CH1	**PV**	**CH2**	**SV**
Closed	TRUE (1.0)	Closed	TRUE (1.0)
Open	FALSE (0.0)	Open	FALSE (0.0)

Dual input, limit contact logic

When configured for Limit Contact Logic, the transmitter will accept the input from two single pole single throw switches on inputs CH1 and CH2, and will use limit contact logic for the determination of the wireless outputs.

Figure 3: Dual Input, Limit Contacts

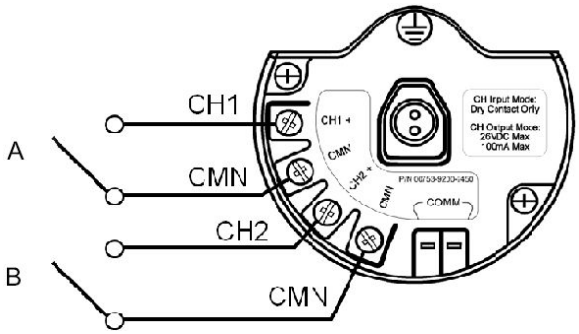

A. True
B. False

Table 2: Dual Input, Limit Contact Logic

Switch inputs		Wireless outputs	
CH1	**CH2**	**PV**	**SV**
Open	Open	TRAVEL (0.5)	TRAVEL (0.5)
Open	Closed	FALSE (0.0)	FALSE (0.0)
Closed	Open	TRUE (1.0)	TRUE (1.0)
Closed	Closed	FAULT (NaN)	FAULT (NaN)

Dual input, opposing contact logic

When configured for opposing contact logic, the transmitter will accept the input from a double pole single throw switch on inputs CH1 and CH2, and will use opposing contact logic for the determination of the wireless outputs.

Figure 4: Dual Input, Opposing Contact

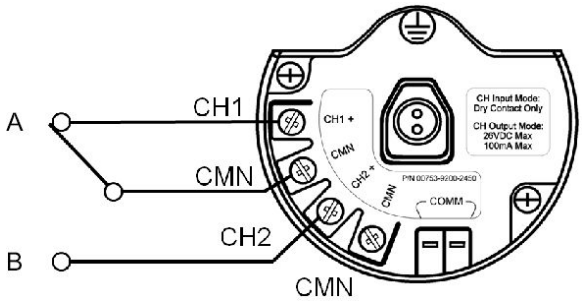

A. True
B. False

Table 3: Dual Input, Opposing Contact Logic

Switch inputs		Wireless outputs	
CH1	**CH2**	**PV**	**SV**
Open	Open	FAULT (NaN)	FAULT (NaN)
Open	Closed	FALSE (0.0)	FALSE (0.0)
Closed	Open	TRUE (1.0)	TRUE (1.0)
Closed	Closed	FAULT (NaN)	FAULT (NaN)

Momentary discrete inputs, measurement option code 32 and 42

The transmitter is capable of detecting momentary discrete inputs of 10 millisecond or more in duration, regardless of the wireless update rate. At each wireless update, the device reports current discrete state along with an accumulating count of close-open cycles for each input channel.

Figure 5: Momentary Inputs and Accumulating Count

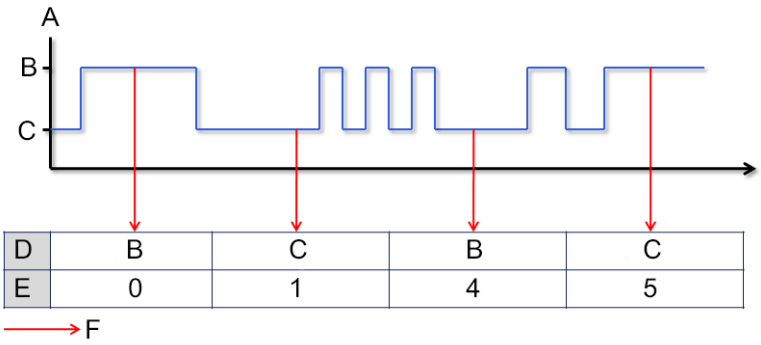

A. Input switch state
B. Closed
C. Open
D. State
E. Count
F. Wireless updates

Figure 6: Reporting of Current Discrete State and Count in AMS Device Manager

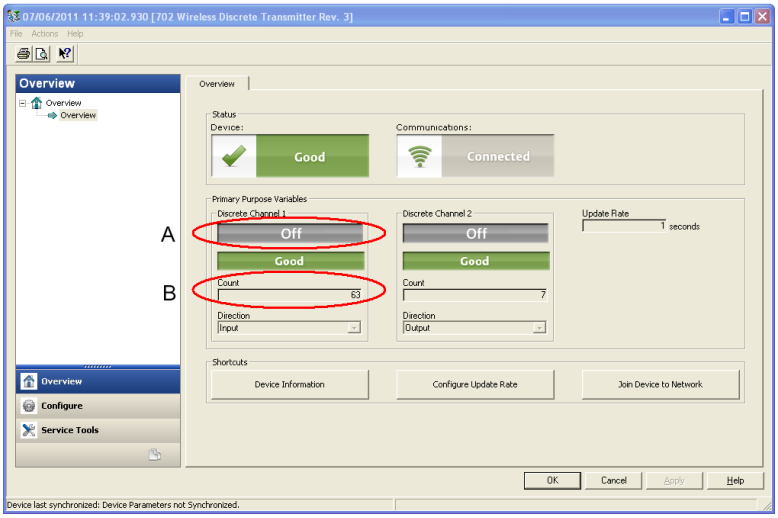

A. Current state
B. Count

Variable reporting and mapping

In the Enhanced variable reporting mode, the transmitter will provide both current state of the discrete channels, and a count of the discrete state change cycles. Following is a table that shows the variable mapping for both cases. Variable Reporting can be set in AMS Device Manager by going to **Configure** → **Manual Setup** → **HART**.

Table 4: Variable Mapping

Variable reporting	Variable mapping			
	PV	SV	TV	QV
Enhanced – Discrete state with count	CH1 state	CH2 state	CH1 count	CH2 count

Discrete output circuits, measurement option Code 42

The transmitter has two channels that can each be configured for discrete input or output. Inputs must be dry contact switch inputs and these were described in a preceding section of this document. Outputs are a simple switch closure to activate an output circuit. The transmitter output does not provide any voltage or current, the output circuit must have power of its own. The transmitter output has maximum switch capacity per channel of 26 volts DC and 100 milliamps. A typical power supply for powering an output circuit can be 24 volts or lower.

Note

It is very important that the polarity of the output circuit is as shown in the wiring diagrams, with the positive (+) side of the circuit wired to the CH1+ or the CH2 + terminal, and the negative (-) side of the circuit wired to the CMN terminal. If the output circuit is wired backwards, it will remain active (switch closed) regardless of the state of the output channel.

Discrete output switch functionality

The discrete output of the transmitter is driven by the host control system, through the Gateway, and out to the transmitter. The time required for this wireless communication from the Gateway to the transmitter is dependent on many factors, including the size and topology of the network and the total amount of downstream traffic on the wireless network. For a network that is constructed to our best practices, typical delays in communication of a discrete output from the Gateway to the Transmitter are 15 seconds or less. Remember that this delay is only part of the latency that will be observed in a control loop.

Note

The output switch functionality of the transmitter requires that the network is managed by a version 3 Gateway with v3.9.7 firmware, or a version 4 Gateway with v4.3 or higher firmware installed.

Figure 7: Output Circuit Wiring

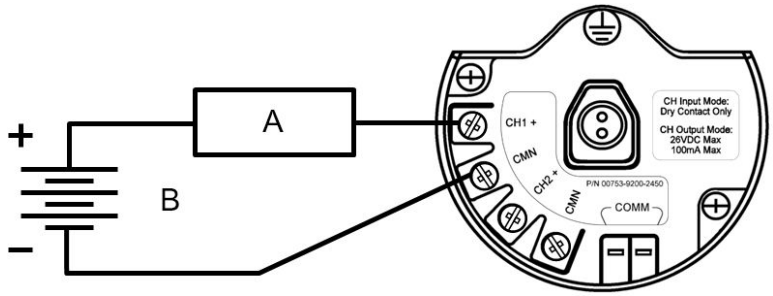

A. Load
B. Output

Figure 8: Possible Configurations for Both Channel 1 and Channel 2

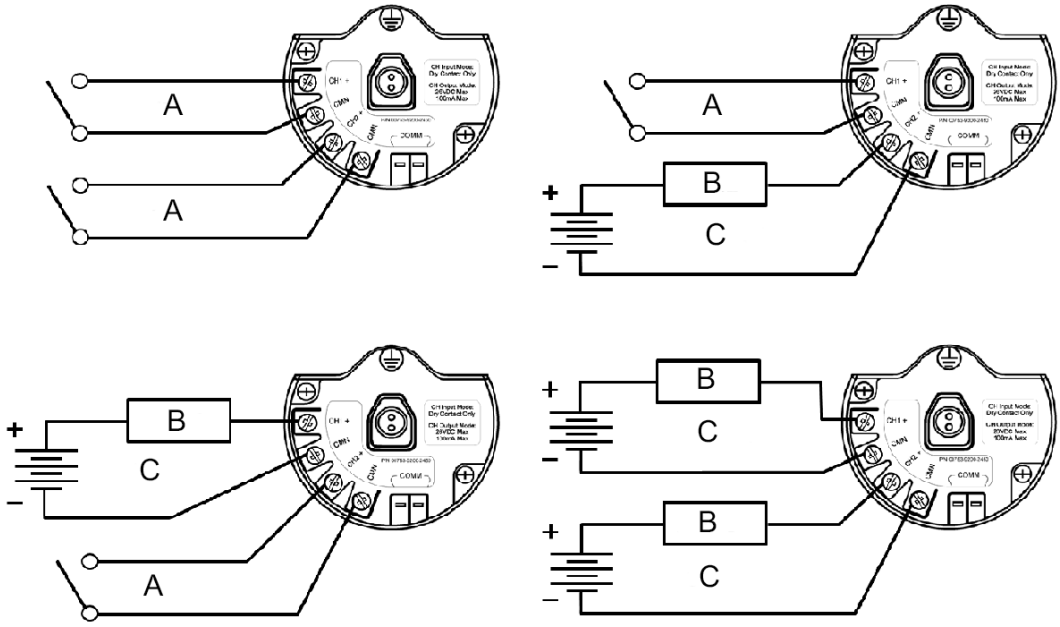

A. Input
B. Load
C. Output

Special considerations for dual output circuits

If both channels are connected to output circuits, it is very important that the CMN terminal of each circuit be at the same voltage. Employing a common ground for both output circuits is one way to ensure that both circuits have CMN terminals at the same voltage.

Figure 9: Dual Output Circuits with a Common Ground

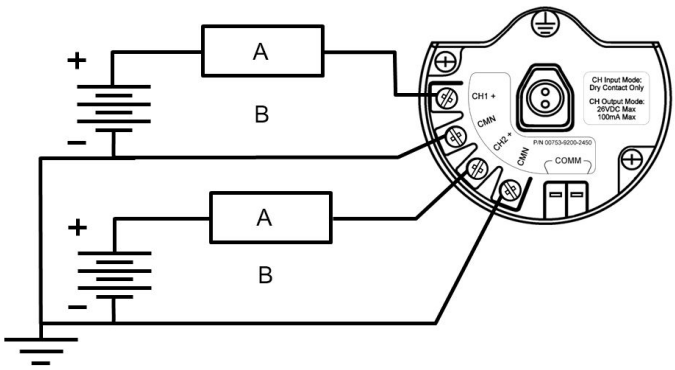

A. Load
B. Output

If two output circuits are connected to a single transmitter with a single power supply, both CH + and CMN terminals must be connected to each output circuit. The negative power supply wires must be at the same voltage and connected to both CMN terminals.

Figure 10: Dual Output Circuits with One Power Supply

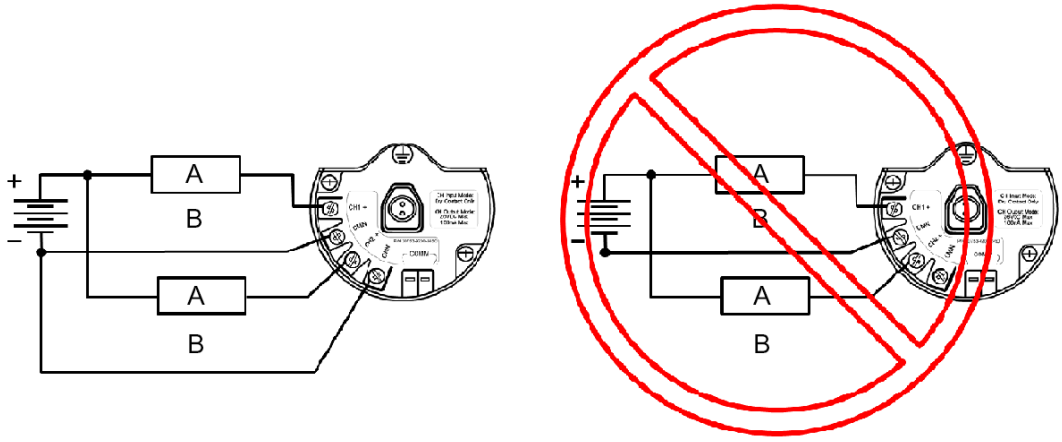

A. Load
B. Output

Switching greater currents or voltages

It is important to note that the maximum output switching capacity is 26 volts DC and 100 milliamps. If a greater voltage or current is to be switched, an interposing relay circuit can be used. Below is an example of a circuit to switch higher currents or voltages.

Figure 11: Wiring an Interposing Relay to Switch Greater Currents or Voltages

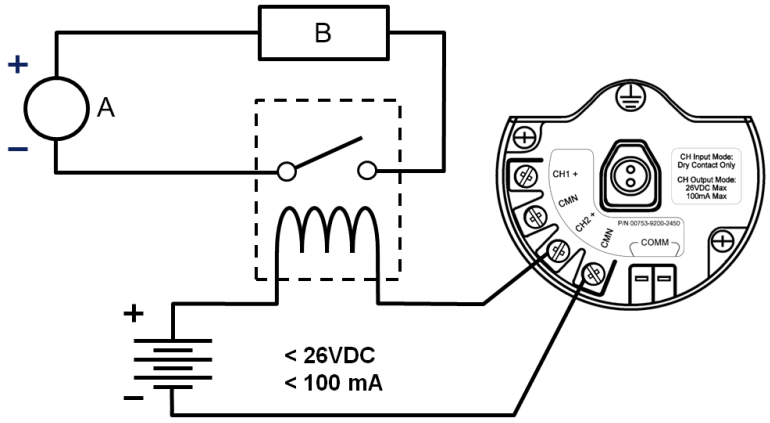

A. Power supply
B. Load

Plunger arrival detection

Terminal block connections

The plunger arrival detection configuration for measurement option code 52 is intended for use with the ETC Cyclops™ Plunger Arrival Sensor.

Figure 12: Plunger Arrival Terminal Diagram

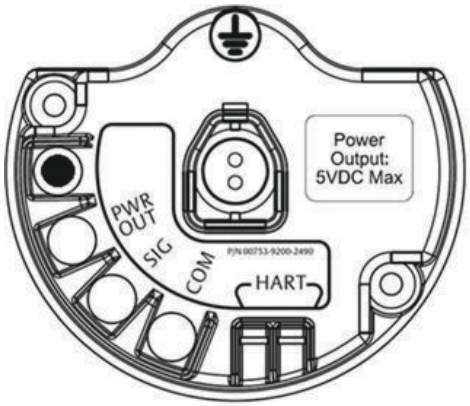

The wiring connections to the ETC Cyclops Sensor are made according to Figure 13, where 1 connects to 3, 2 connects to 2, and 3 connects to 1 between the transmitter and the sensor.

Figure 13: Wiring Configuration



A. PWR
B. SIG
C. COM

For mounting and maintenance of the ETC Cyclops Sensor, refer to the ETC Cyclops Plunger Arrival Sensor Manual.

Latching feature

The Rosemount 702 has a latching feature that, when enabled, allows detection of momentary state changes to be held for a configurable latch period. The latching feature can be configured to detect either high or low state changes. By default, the Plunger state (channel 1) is enabled to latch high state changes for a period of one minute.

The following are some examples to demonstrate how the latching time works.

Note
Hold time is set to four seconds for illustration in the following examples.

Short events (less than latch hold time) of the measured value will be latched to the reported value for the duration of latch hold time.

Figure 14: Latch Time Short Events

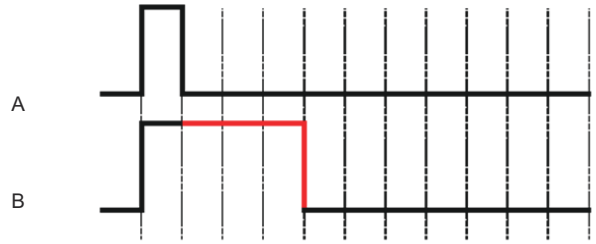

A. Measured
B. Reported

The start of the latch hold timer begins when the measured signal first transitions to active state.

Figure 15: Latch Hold Time Start

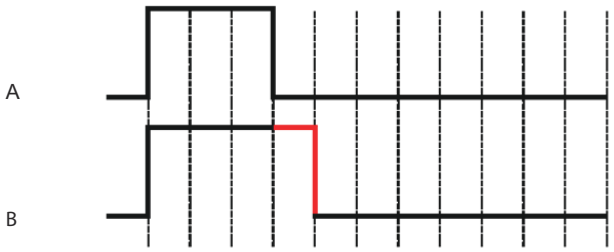

A. Measured
B. Reported

The latch only applies to transitions into the active state. As soon as the reported value is no longer latched, the device is armed for the next event.

Figure 16: Latch Applies to Transitions into Active State

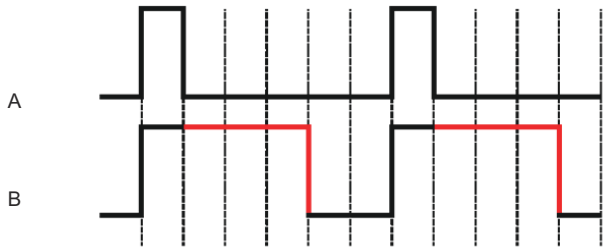

A. Measured
B. Reported

If the measured value goes inactive and active again before the initial latch hold timer expires, the latch hold timer will restart from the beginning of the most recent event.

Figure 17: Latch Hold Timer Restarts

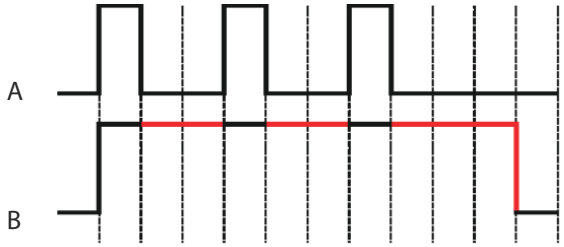

A. Measured
B. Reported

Leak sensors, liquid hydrocarbon detection, measurement option code 61

Terminal block connections

The Liquid Hydrocarbon Detection configuration is intended for use with the nVent™ TraceTek® Fast Fuel Sensor, or TraceTek sensing cable.

Figure 18: Fuel Sensor Terminal

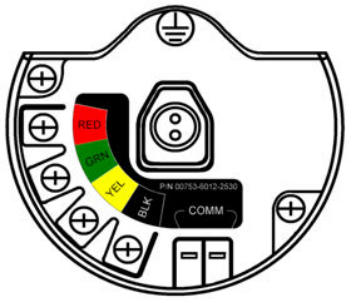

Figure 19: Fuel Sensor Connection

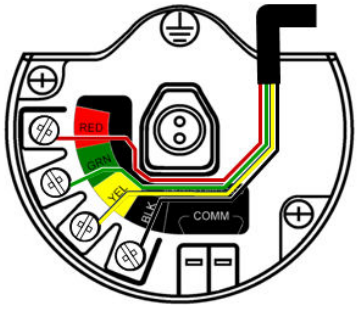

Connecting to the fast fuel sensor and TraceTek sensing cable

The connections to the Fast Fuel Sensor TraceTek sensing cable are made by matching the appropriately colored wires to the matching colored termination lugs.

Note
All part numbers associated with the fuel sensor cable wiring refer to products sold by nVent™ Thermo Controls, LLC.

The Rosemount 702 Wireless Transmitter is compatible with the Standard (TT-FFS) and Water Resistant (TT-FFS-WR) Fast Fuel Sensors. One transmitter can support up to 3 FastFuel sensors. These Fast Fuel sensors are connected using TraceTek Modular Leader Cable (TT-MLC-MC-BLK), optional modular jumper cables (TT-MJC-xx-MC-BLK) and branching connectors (TT-ZBC-MC-BLK) as suggested in Figure 20.

Figure 20: Fuel Sensor Wiring

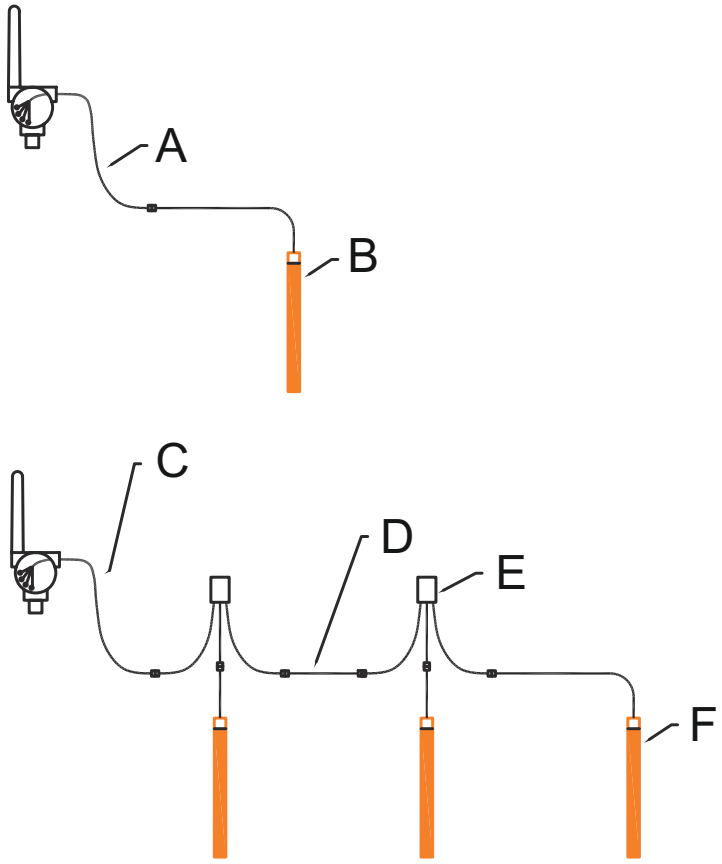

A. *TT-MLC-MC-BLK (Leader cable)*
B. *TT-FFS or TT-FFS-WR (Fast fuel sensor probe)*
C. *TT-MLC-MC-BLK (Leader cable)*
D. *TT-MJC-xx-MC-BLK (Optional jumper cable)*
E. *TT-ZBC-xx-MC-BLK (Branch connector)*
F. *TT-FFS or TT-FFS-WR (Fast fuel sensor probe)*

The Rosemount 702 Wireless Discrete Transmitter can support up to 500 feet of TraceTek hydrocarbon or solvent sensor cable (TT5000 or TT5001 series). The total amount of sensor cable connected to a single Rosemount 702 Transmitter is not to exceed 500 ft. (150 m). However leader cable, jumper cables (if used) and branch connectors are not included in the 500-foot limit. See Figure 21 for typical configurations.

Figure 21: Fuel Sensor Cable Wiring

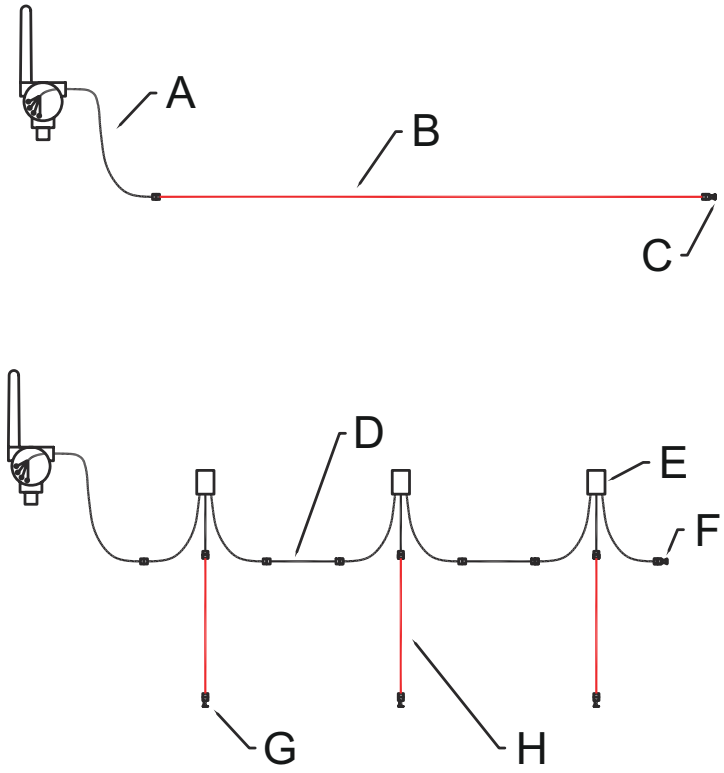

A. TT-MLC-MC-BLK (Leader Cable)
B. TT5000/TT5001 Sensor cable (up to 500 ft.)
C. TT-MET-MC (End termination)
D. TT-MJC-xx-MC-BLK (Optional jumper cable)
E. TT-ZBC-xx-MC-BLK (Branch connector)
F. TT-MET-MC (End termination)
G. TT-MET-MC (End termination)
H. Up to 500-ft. TT5000 or TT5001 sensor cable (Total per 702)

Important notes regarding the use of nVent TraceTek Fast Fuel Sensor and TraceTek sensing cable:

- nVent TraceTek sensors must be installed as per manufacturer recommendations.
- Do not run the Rosemount 702 Transmitter for long periods (more than two weeks) with a nVent fuel sensor in the leak state as this will more rapidly deplete the power module.

Safety shower and eye wash monitoring

The Rosemount 702 Transmitter can be used to monitor safety showers and eye wash stations by using switch kits provided by TopWorx™, an Emerson company. These kits are ordered as a part of the Rosemount 702 model code and are available for both insulated and un-insulated pipes. These kits contain the switches, brackets and cables that are necessary to install the transmitter to monitor both the safety shower and the eye wash in a single station. Because each has two input channels, one transmitter can be used to monitor both a safety shower and an eye wash.

Each safety shower monitoring kit contains:

- Two TopWorx GO™ Switch magnetic proximity switches
- Two cables, six-foot and 12-foot
- Two black polymer cable glands
- Mounting kit for safety shower and eye wash

UL and CSA switches

Safety shower and eye wash monitoring kits are available with either UL or CSA switches. This designation refers to the ordinary location certification of the GO Switch in the kit. These are not hazardous locations certificates. The Go Switch is regarded as a simple apparatus and does not require its own hazardous locations certificate. Either GO Switch is suitable for installation in hazardous locations when wired to the Rosemount 702 with an appropriate hazardous locations certificate. The CSA GO Switch is for applications in Canada, the UL GO Switch is for applications in all other world areas.

Installation drawings and instructions

Installation drawings and instructions for safety shower and eye wash kits are included in the Rosemount 702 Transmitter Reference Manual. This manual can be downloaded at the Rosemount 702 Transmitter Product Page.

Safety shower monitoring

When the shower valve is activated (valve open) by pulling down on the handle, the TopWorx switch is activated (closed switch) and the Rosemount 702 senses that switch closure. This switch state is then transmitted by the transmitter to the Gateway, which then sends that information to the control host or alert system. When the shower valve is closed, the switch remains in the activated state until it is reset by a technician. The switch can be re-set only by placing a ferrous metal object on the far side of the sensing area of the switch.

Figure 22: TopWorx Switch Installed on a Safety Shower

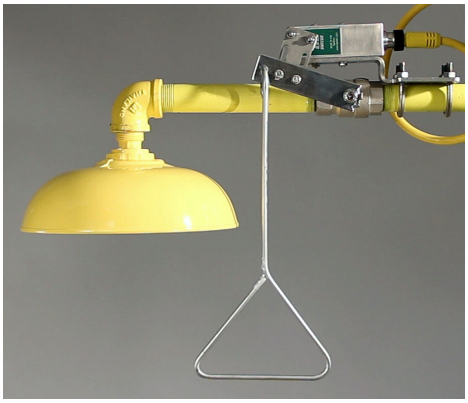

Figure 23: Detail of Switch Installation on Safety Shower

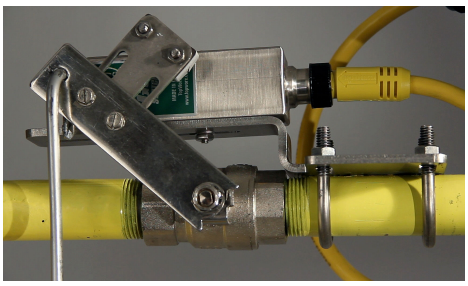

Figure 24: Safety Shower Valve in Activated Position



Eye wash monitoring

When the eye wash valve is activated (valve open) by pushing down on the hand paddle, the TopWorx switch is activated (closed switch) and the Rosemount 702 senses that switch closure. This switch state is then transmitted by the transmitter to the Gateway, which then sends that information to the control host or alert system. When the eye wash valve is closed, the switch remains in the activated state until it is reset by a technician. The switch can be re-set only by placing a ferrous metal object on the far side of the sensing area of the switch.

Figure 25: TopWorx Switch Installed on an Eye Wash Station



Figure 26: Eye Wash in Activated Position



Product certification

Rev 2.3

European directive information

A copy of the EU Declaration of Conformity can be found at the end of the Quick Start Guide. The most recent revision of the EU Declaration of Conformity can be found at Emerson.com/Rosemount.

Telecommunication compliance

All wireless devices require certification to ensure that they adhere to regulations regarding the use of the RF spectrum. Nearly every country requires this type of product certification. Emerson is working with governmental agencies around the world to supply fully compliant products and remove the risk of violating country directives or laws governing wireless device usage.

FCC and IC

This device complies with Part 15 of the FCC Rules. Operation is subject to the following conditions: This device may not cause harmful interference. This device must accept any interference received, including interference that may cause undesired operation. This device must be installed to ensure a minimum antenna separation distance of 20 cm from all persons.

Ordinary location certification

As standard, the transmitter has been examined and tested to determine that the design meets the basic electrical, mechanical, and fire protection requirements by a nationally recognized test laboratory (NRTL) as accredited by the Federal Occupational Safety and Health Administration (OSHA).

Installing equipment in North America

The US National Electrical Code® (NEC) and the Canadian Electrical Code (CEC) permit the use of Division marked equipment in Zones and Zone marked equipment in Divisions. The markings must be suitable for the area classification, gas, and temperature class. This information is clearly defined in the respective codes.

USA

I5 USA Intrinsic Safety

Certificate: 1143113

Standards: FM Class 3600: 2011, FM Class 3610:2010, FM Class 3810: 2005

Markings: IS Class I/II/III, Division I, Groups A, B, C, D, E, F, and G, T4; Class I, Zone 0 AEx ia IIC T4; Ga T4 (-50 °C ≤ T_a ≤ +70 °C)

N5 CSA Class 1 Division 2 (USA)

Certificate: 1143113

Standards: FM Class 3600: 2011, FM Class 3611: 2004, FM Class 3810: 2005

Markings: Class 1, Division 2, Groups A, B, C, and D, T5(-50 °C ≤ T_a ≤ +85 °C); Class II, Division 1 Groups E, F, G, T5(-50 °C ≤ T_a ≤ +85 °C); Class III

Canada

I6 CSA Intrinsically Safe (Canada)

Certificate: 1143113

Standards: CAN/CSA-60079-0-:2015, CSA C22.2 No. 94.2-07, CAN/CSA-C22.2 No. 61010-1-12, CAN/CSA C22.2 No. 60079-11:14, CSA Std C22.2 No. 60529:16

Markings: Intrinsically Safe Class I, Division 1, Groups A, B, C and D, T4; suitable for Class 1, Zone 0, IIC, T4; when connected per Rosemount drawing 00702-1020; Type 4X

N6 CSA Class I Division 2 (Canada)

Certificate: 1143113

Standards: CAN/CSA-60079-0-:2015, CSA C22.2 No. 94.2-07, CAN/CSA-C22.2 No. 61010-1-12, CSA C22.2 No. 213-2017, CSA Std C22.2 No. 60529:16

Markings: Suitable for Class 1, Division 2, Groups A, B, C, and D, T5; Cl. I, Zone 2, IIC, T5

Europe

I1 ATEX Intrinsic Safety

Certificate: Baseefa07ATEX0239X

Standards: EN IEC 60079-0: 2018, EN 60079-11: 2012

Markings: Ⓔx II 1 G Ex ia IIC T4 Ga, T4(-60 °C ≤ T_a ≤ +70 °C)
Ex ia IIC T4 Ga, T4(-60 °C ≤ T_a ≤ +40 °C)

For use with Rosemount SmartPower™ power module part number 753-9220-0001, or for use with Emerson SmartPower option 701PBKKF

Sensor terminal parameters (option code 32)	Fuel sensor terminal parameters (option code 61)	Plunger arrival transmitter parameters (option code 52)
U_O = 6.15 V	U_O = 7.8 V	U_O = 6.6 V
I_O = 13.37 mA	I_O = 92 mA	I_O = 125 mA
P_O = 21.76 mW	P_O = 180 mW	P_O = 202 mW
C_i = 0.216 µF	C_i = 10 nF	C_i = 8.36 nf
C_{OIIC} = 23.78 µF	C_{OIIC} = 9.2 µF	L_i = 0
C_{OIIB} = 549.78 µF	C_{OIIB} = 129 µF	C_o = 74 nF
L_i = 0	L_i = 0	N/A
L_{OIIC} = 200 mH	L_{OIIC} = 4.2 mH	N/A

Sensor terminal parameters (option code 32)	Fuel sensor terminal parameters (option code 61)	Plunger arrival transmitter parameters (option code 52)
L_{OIIB} = 800 mH	L_{OIIB} = 16.8 mH	N/A
L_{OIIA} = 1000 mH	L_{OIIA} = 33.6 mH	N/A

Special Condition for Safe Use (X):

1. The surface resistivity of the antenna is greater than 1 GΩ. To avoid electrostatic charge build-up, it must not be rubbed or cleaned with solvents or a dry cloth.
2. The Model 701PBKKF Power Module, MHM-89004 Blue Power Module or Intelligent Power Module 71008 may be replaced in a hazardous area. The Power Modules have a surface resistivity greater than 1 GΩ and must be properly installed in the wireless device enclosure. Care must be taken during transportation to and from the point of installation to prevent electrostatic charge build-up.
3. The Model 702 enclosure may be made of aluminum allow and given a protective polyurethane paint finish; however, care should be taken to protect it from impact or abrasion if located in a zone 0 area.

IU ATEX Intrinsic Safety for Zone 2

Certificate: Baseefa12ATEX0122X

Standards: EN IEC 60079-0: 2018, EN 60079-11: 2012

Markings: Ⓔx II 1 G Ex ia IIC T4 Gc, T4(-60 °C ≤ T_a ≤ +70 °C)
Ex ia IIC T5 Gc, T5(-60 °C ≤ T_a ≤ +40 °C)

Sensor terminal parameters (input)	Switch terminal parameters (output)	Discrete Input transmitter rev 2 output	Plunger Arrival Transmitter Output
U_O = 6.6 V	U_i = 26 V	U_O = 6.6 V	U_O = 6.6 V
I_O = 13.4 mA	I_i = 100 mA	I_O = 13.4 mA	I_O = 125 mA
P_O = 21.8 mW	P_i = 0.65 W	P_O = 21.8 W	P_O = 202 mW
C_O = 10.9 µF	N/A	Ci= 0.216 nF	C_i = 8.36 nF
L_O = 25 µH	N/A	Li= 0	L_i = 0

Special Conditions for Safe Use (X):

1. The surface resistivity of the antenna is greater than 1 GΩ. To avoid electrostatic charge build-up, it must not be rubbed or cleaned with solvents or dry cloth.
2. The Model 701PBKKF Power Module, MHM-89004 Blue Power Module, or Intelligent Power Module 71008 may be replaced in a hazardous area. The power module has surface resistivity greater than 1 GΩ and must be properly installed in the wireless device enclosure. Care must be taken during transportation to and from the point of installation to prevent electrostatic charge build-up.

International

I7 IECEx Intrinsic Safety

Certificate: IECEx BAS 07.0082X

Standards: IEC 60079-0: 2017, IEC 60079-11: 2011

Markings: Ex ia IIC T4 Ga, T4(-60 °C ≤ T_a ≤ +70 °C)
Ex ia IIC T5 Ga, T5(-60 °C ≤ T_a ≤ +40 °C)

Sensor terminal parameters (option code 32)	Fuel sensor terminal parameters (option code 61)	Plunger arrival transmitter parameters (option code 52)
U_O = 6.51 V	U_O = 7.8 V	U_O = 6.6V
I_O = 13.37 mA	I_O = 92 mA	I_O = 125mA
P_O = 21.76 mW	P_O = 180 mW	P_O = 202mW
C_i = 0.216 µF	C_i = 10 nF	C_i = 8.36nF
$C_{O\ IIC}$ = 21.78 µF	$C_{O\ IIC}$ = 9.2 µF	Li = 0
$C_{O\ IIB}$ = 549.78 µF	$C_{O\ IIB}$ = 129 µF	C_O = 74nF
$C_{O\ IIA}$ = 1000 µF	$C_{O\ IIA}$ = 1000 µF	L_O = 1.5mH
L_i = 0	L_i = 0	N/A
$L_{O\ IIC}$ = 200 mH	$L_{O\ IIC}$ = 4.2 mH	N/A
$L_{O\ IIB}$ = 800 mH	$L_{O\ IIB}$ = 16.8 mH	N/A
$L_{O\ IIA}$ = 1000 mH	$L_{O\ IIA}$ = 33.6 mH	N/A

Special Conditions for Safe Use (X):

1. The surface resistivity of the antenna is greater than 1 GΩ. To avoid electrostatic charge build-up, it must not be rubbed or cleaned with solvents or dry cloth.
2. The Rosemount 701PBKKF Power Module may be replaced in a hazardous area. The power modules have a surface resistivity greater than 1 GΩ and must be properly installed I the wireless device enclosure. Care must be taken during transportation to and from the point of installation to prevent electrostatic charge build-up.
3. The Rosemount 702 enclosure may be made of aluminum alloy and given a protective polyurethane paint finish; however, care should be taken to protect it from impact or abrasion if located in a Zone 0 area.

IY IECEx Intrinsic Safety for Zone 2

Certificate: IECEx BAS 12.0082X

Standards: IEC 60079-0: 2017, IEC 60079-11: 2011

Markings: Ex ic IIC T4 Gc (-60 °C ≤ T_a ≤ 70 °C)
Ex ic IIC T5 Gc (-60 °C ≤ T_a ≤ 40 °C)

Sensor terminal parameters (input)	Switch terminal parameters (output)
U_O = 6.6 V	U_i = 26 V
I_O = 13.4 mA	I_i = 100 mA
P_O = 21.8 mW	P_i = 0.65 W
C_O = 10.9 µF	N/A
L_O = 25 µH	N/A

Special Conditions for Safe Use (X):

1. The surface resistivity of the antenna is greater than 1 GΩ. To avoid electrostatic charge build-up, it must not be rubbed or cleaned with solvents or dry cloth.

2. The Rosemount 701PBKKF Power Module may be replaced in a hazardous area. The power modules have a surface resistivity greater than 1 GΩ and must be properly installed I the wireless device enclosure. Care must be taken during transportation to and from the point of installation to prevent electrostatic charge build-up.
3. The Rosemount 702 enclosure may be made of aluminum alloy and given a protective polyurethane paint finish; however, care should be taken to protect it from impact or abrasion if located in a Zone 0 area.

China

I3 China Intrinsic Safety

Certificate: GYJ18.1330X

Standards: GB3836.1-2010, GB3836.4-2010, GB3836.20-2010

Markings: (option 32, 61): Ex ia IIC T4/T5 Ga, T4(-60 ~ 70 °C)/T5(-60 ~ 40 °C)
(option 32, 42): Ex ic IIC T4/T5 Gc, T4(-60 ~ 70 °C)/T5(-60 ~ 40 °C)

Sensor terminal parameters (option code 32)	Terminal parameters (option code 42)		Fuel sensor terminal parameters (option code 61)
	Sensor	Switch	
U_O = 6.6 V	U_O = 6.6 V	U_i = 26 V	U_O = 7.8 V
I_O = 13.4 mA	I_O = 13.4 mA	I_i = 100 mA	I_O = 92 mA
P_O = 21.8 mW	P_O = 21.8 mW	P_i = 650 mW	P_O = 180 mW
$C_{O\ IIC}$ = 21.78 µF	C_O = 10.9 µF	N/A	C_O = 9.29 µF
$C_{O\ IIB}$ = 499.78 µF	N/A	N/A	N/A
$C_{O\ IIA}$ = 1000 µF	N/A	N/A	N/A
$L_{O\ IIC}$ = 200 mH	L_O = 0.025 mH	N/A	L_O = 2 mH
$L_{O\ IIB}$ = 800 mH	N/A	N/A	N/A
$L_{O\ IIA}$ = 1000 mH	N/A	N/A	N/A

Special Condition for Safe Use (X):

1. See certificate for special conditions.

Japan

I4 CML Intrinsic Safety

Certificates: CML 19JPN2026X

Markings: Ex ia IIC T4 Ga (-60 °C ≤ T_a ≤ 70 °C)
Ex ia IIC T5 Ga (-60 °C ≤ T_a ≤ 40 °C)

EAC – Belarus, Kazakhstan, Russia

IM Technical Regulation Customs Union (EAC) Intrinsic Safety

Certificate: RU C-US.AA87.B.00231

Markings: (option 32, 61): 0Ex ia IIC T4/T5 X, T4 (-60 °C ≤ T_a ≤ +70 °C)/T5 (-60 °C ≤ T_a ≤ +40 °C)
(option 32, 42): 2Ex ic IIC T4/T5 X, T4 (-60 °C ≤ T_a ≤ +70 °C)/T5 (-60 °C ≤ T_a ≤ +40 °C)

Sensor terminal parameters (option code 32)	Terminal parameters (option code 42)		Fuel sensor terminal parameters (option code 61)
	Sensor	Switch	
U_O = 6.6 В	U_O = 6.6 В	U_i, В = 26 В	U_O = 7.8 В
IO = 13.4 MA	I_O = 13.4 MA	I_i, MA = 100 MA	I_O = 92 MA
PO = 21.8 MBT	P_O = 21.8 MBT	P_i, BT = 650 MBT	P_O = 180 MBT
C_i = 216 НФ	C_i = 216 НФ	N/A	C_i = 10 НФ
$C_{O\ IIC}$ = 23.78 мкФ	$C_{O\ IIC}$ = 23.78 мкФ	N/A	N/A
$C_{O\ IIB}$ = 549.78 мкФ	$C_{O\ IIB}$ = 549.78 мкФ	N/A	N/A
$C_{O\ IIA}$ = 1000 мкФ	COIIA = 1000 мкФ	N/A	N/A
L_i = 0	L_i = 0	L_i = 0	L_i = 0
$L_{O\ IIC}$ = 200 МГН	$L_{O\ IIC}$ = 200 МГН	N/A	N/A
$L_{O\ IIB}$ = 800 МГН	$L_{O\ IIB}$ = 800 МГН	N/A	N/A
$L_{O\ IIA}$ = 1000 МГН	$L_{O\ IIA}$ = 1000 МГН	N/A	N/A

Special Condition for Safe Use (X):

1. See certificate for special conditions.

Korea

IP Republic of Korea Intrinsic Safety

Certificate: 10-KB4BO-0136

Markings: Ex ia IIC T4 Ga (-60 °C ≤ T_a ≤ 70 °C)
Ex ia IIC T5 Ga (-60 °C ≤ T_a ≤ 40 °C)

Combinations

KQ Combination of I1, I5, and I6

Dimensional drawings

Figure 27: Rosemount 702 Wireless Transmitter

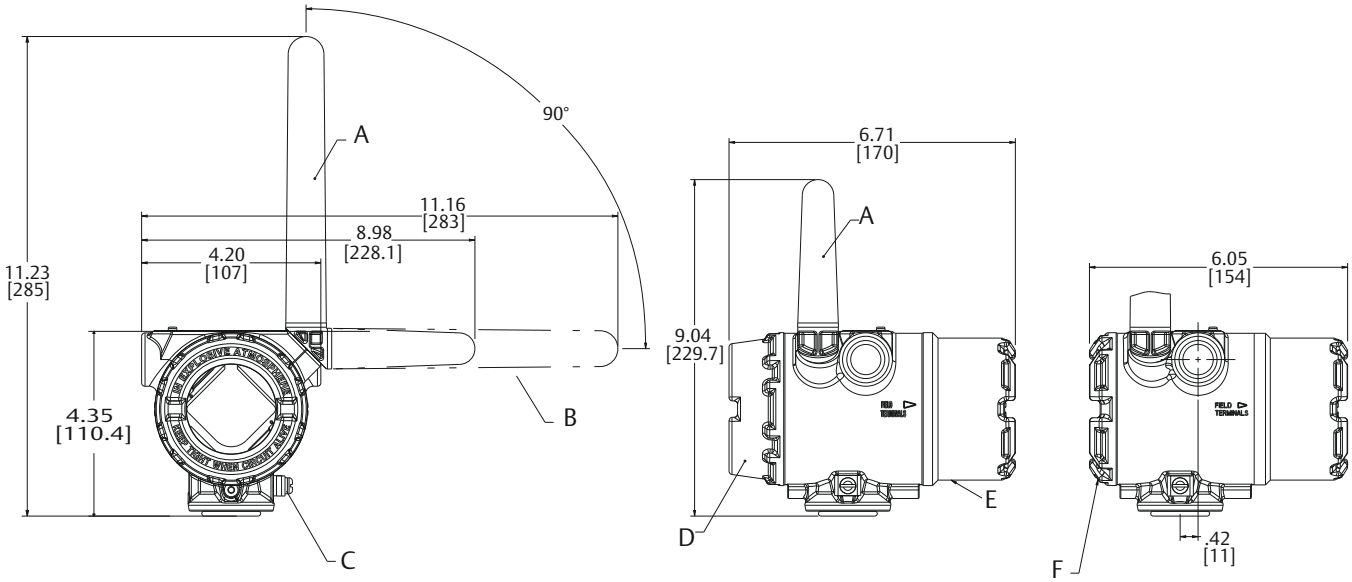

A. 2.4 GHz/WirelessHART® extended range antenna
B. Possible antenna rotation
C. Ground screw assembly
D. Digital display cover
E. Field terminals (this side)
F. Transmitter electronics (this side)

Dimensions are in inches (millimeters).

Figure 28: Mounting Configuration with Optional Mounting Bracket

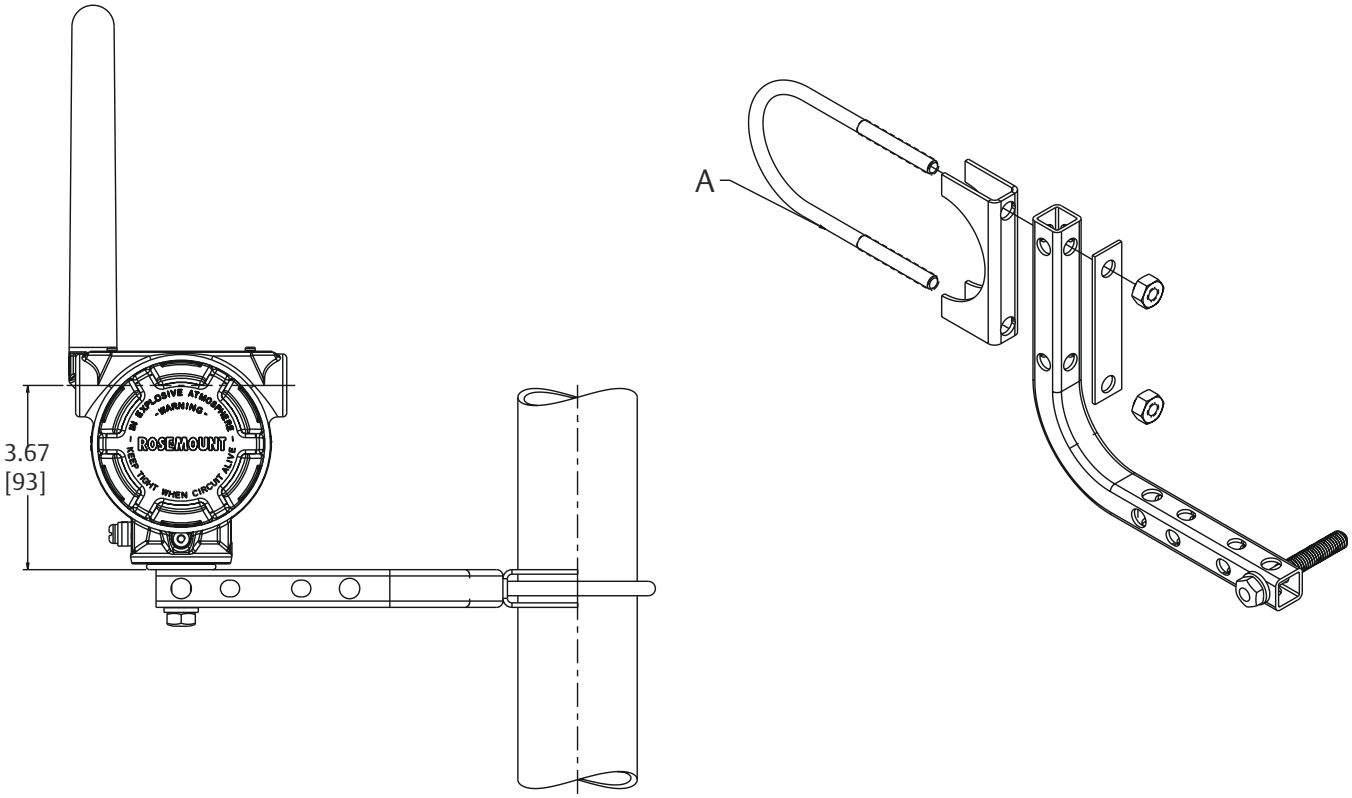

A. 2-in. U-bolt for pipe fitting

Dimensions are in inches (millimeters).

00813-0100-4702
Rev. LA
August 2020

Emerson Automation Solutions
6021 Innovation Blvd.
Shakopee, MN 55379, USA
+1 800 999 9307 or +1 952 906 8888
+1 952 949 7001
RFQ.RMD-RCC@Emerson.com

North America Regional Office
Emerson Automation Solutions
8200 Market Blvd.
Chanhassen, MN 55317, USA
+1 800 999 9307 or +1 952 906 8888
+1 952 949 7001
RMT-NA.RCCRFQ@Emerson.com

Latin America Regional Office
Emerson Automation Solutions
1300 Concord Terrace, Suite 400
Sunrise, FL 33323, USA
+1 954 846 5030
+1 954 846 5121
RFQ.RMD-RCC@Emerson.com

Europe Regional Office
Emerson Automation Solutions Europe
GmbH
Neuhofstrasse 19a P.O. Box 1046
CH 6340 Baar
Switzerland
+41 (0) 41 768 6111
+41 (0) 41 768 6300
RFQ.RMD-RCC@Emerson.com

Asia Pacific Regional Office
Emerson Automation Solutions
1 Pandan Crescent
Singapore 128461
+65 6777 8211
+65 6777 0947
Enquiries@AP.Emerson.com

Middle East and Africa Regional Office
Emerson Automation Solutions
Emerson FZE P.O. Box 17033
Jebel Ali Free Zone - South 2
Dubai, United Arab Emirates
+971 4 8118100
+971 4 8865465
RFQ.RMTMEA@Emerson.com

Linkedin.com/company/Emerson-Automation-Solutions
Twitter.com/Rosemount_News
Facebook.com/Rosemount
Youtube.com/user/RosemountMeasurement

©2020 Emerson. All rights reserved.

Emerson Terms and Conditions of Sale are available upon request. The Emerson logo is a trademark and service mark of Emerson Electric Co. Rosemount is a mark of one of the Emerson family of companies. All other marks are the property of their respective owners.

ROSEMOUNT™

EMERSON™