1/16 DIN TIMER ACCESSORIES–8 PIN ACCESSORIES

000-825-85-00

8-Pin surface DIN rail socket. Recommended for use with all 8-pin octal plug-in devices when surface mounting or DIN rail mounting.

UL #E72711
US & CAN.



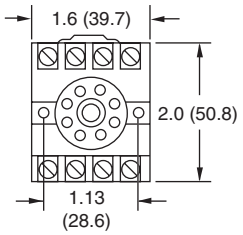

319-261-45-00

Plug-on socket kit (8 pin). Recommended for use with all 8-pin octal plug-in devices. Panel mounting only. Attach the wires to the solderless connector with a crimping tool.

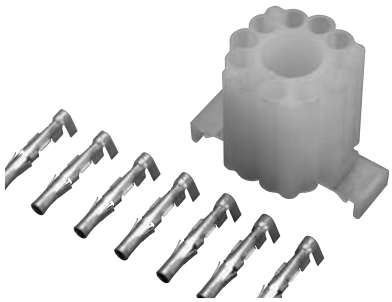

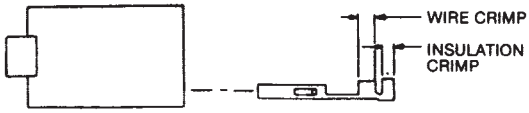

405-320-02-00

Panel Mounting bracket. Recommended for use with all 1/16 DIN timers when panel mounting. Use in conjunction with the 8-pin or 11-pin panel socket with rear facing terminals.

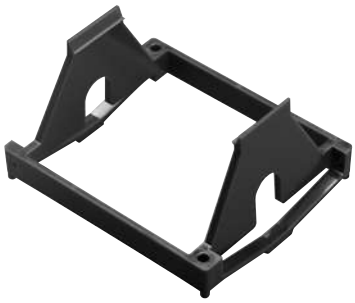

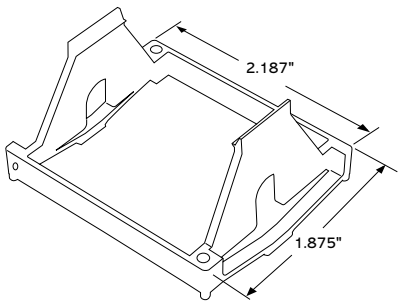

407-025-13-00

Hold-down for 405C/409B Series and part #000-825-85-00. Two (2) needed for proper installation.

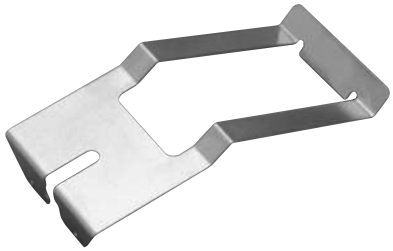

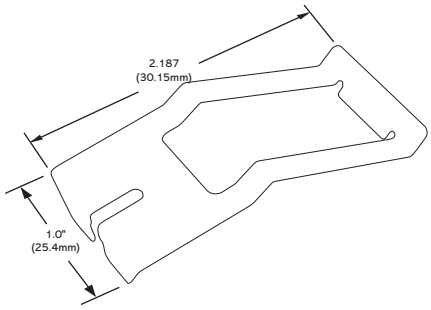

1/16 DIN TIMER ACCESSORIES–8 PIN ACCESSORIES

000-825-86-00

11-Pin surface DIN rail socket. Recommended for use with all 11-pin octal plug-in devices when surface mounting or DIN rail mounting.



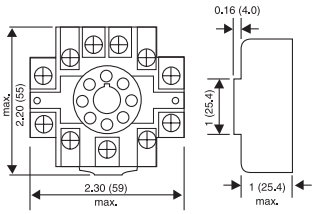

70-463-1

11-Pin Socket, DIN/Panel Mount, with screw terminals & Clamping plates.

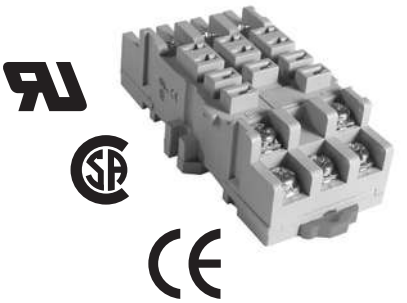

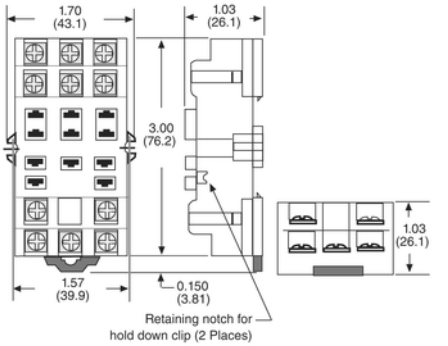

314-260-07-00

Plug-on socket kit (11-pin). Recommended for use with all 11-pin octal plug-in devices. Panel mounting only. Attach the wires to the solderless connector with a crimping tool.

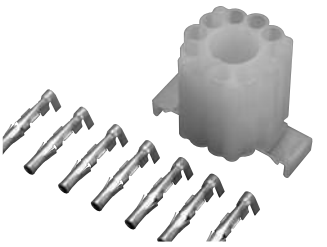

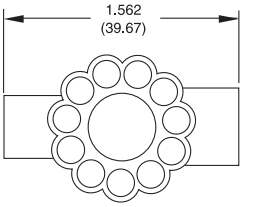

405-025-07-00

Hold down for 407C Series and part #000-825-86-00.
Two (2) needed for proper installation.

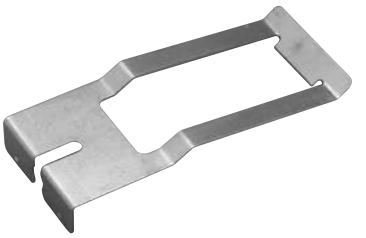

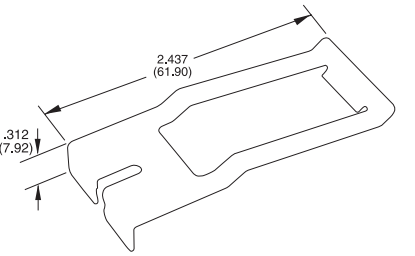

101026105

Recommended for use with all the ATC Diversified Electronics family of "remote adjustable" timers. Proper spacing is maintained for UL and CSA applications. This linear taper potentiometer has a non-conductive shaft attached to the internal conductive plastic wafer. The brass bushing is 3/8" x 32NEF and accepts adjustment hardware 1000540070, 100054071.



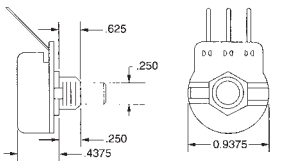

100054073

Recommended for use with any adjustment or switch having a 1/4" shaft. This knob slips over the shaft and is secured in place by a #6-32 set screw. The knurled, mirror finished, black thermostat knob has a white pointer line for reference.



