R58B Series Expert Registration Mark Sensors

Registration Mark Sensors with Three-Color Light Source and Fast Teach

Features

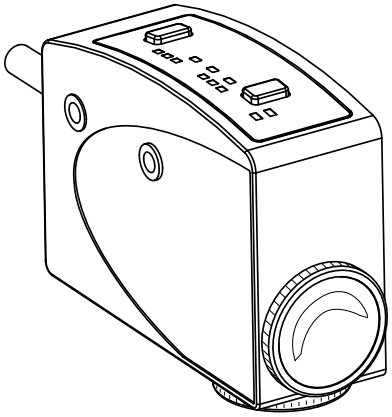

- Ultra-fast 10 kHZ switching frequency
- Sensor automatically selects red, green, or blue LED during TEACH to optimize application contrast
- Outstanding color contrast sensitivity; detects 16 levels of gray scale
- Smart gain-control algorithm to maximize performance in low-contrast or high-gloss applications
- Fast TEACH via single-clicks on the TEACH push-button or remote input
- Sensor configuration options are easily changed via push-buttons or PLC compatible remote input
- Fixed-convergent sensing at 10 mm ±3 mm (0.39" ±0.12"); rectangular sensing image measure 1.2 mm x 3.8 mm (0.05" x 0.15") at 10 mm (0.39") from the lens
- Models available with either parallel or perpendicular sensing image (see Models)
- Rugged zinc alloy die-cast housing with high-quality acrylic lens suitable for food processing applications; rated IP67
- Models available with integral quick disconnect or Euro-style quick-disconnect pigtail

Models

Models*	Focus Distance	Supply Voltage	Output	Sensing Image Orientation
R58BPCRGB1	10 mm (0.39")	10 - 30 Vdc	PNP	Parallel to sensor length 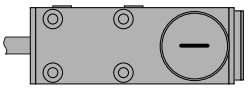
R58BNCRGB1			NPN	
R58BPCRGB2			PNP	Perpendicular to sensor length 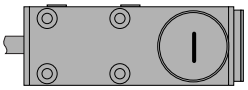
R58BNCRGB2			NPN	

* Only Standard 2 m (6.5') cable models are listed.

- For 9 m (30') cable, add suffix "**W/30**" to the model number (e.g., **R58BPCRGB1 W/30**).
- For 150 mm (6") pigtail with a 4-pin Euro-style connector, add suffix "**Q**" to the model number (e.g., **R58BPCRGB1Q**).
- For integral 4-pin Euro-style QD, add suffix "**Q8**" to the model number (e.g., **R58BPCRGB1Q8**).

WARNING: Not To Be Used for Personnel Protection

Never use this product as a sensing device for personnel protection. Doing so could lead to serious injury or death. This product does NOT include the self-checking redundant circuitry necessary to allow its use in personnel safety applications. A sensor failure or malfunction can cause either an energized or de-energized sensor output condition.

P/N 156477 Rev. A

2/23/2011

0 156477 8

Specifications

Supply Voltage and Current
10 to 30V dc (10% maximum ripple within specified limits)
Supply current (exclusive of load current): 75 mA max @ 10V dc 35 mA @ 30V dc

Supply Protection Circuitry
Protected against reverse polarity and transient over voltages

Output Configuration
Single output: one current sourcing (PNP) or one current sinking (NPN) open-collector transistor by model

Output Rating
ON-state load current: 100 mA max
OFF-state leakage current: NPN < 200 microamps; PNP < 10 microamps (see Application Note 1)
NPN Saturation: < 1.6V at 100 mA
PNP Saturation: < 3.0V at 100 mA

Output Protection Circuitry
Protected against false pulse on power up and continue overload or short-circuit of output

Output Response Time
50 microseconds
Note: 1 second delay on power-up; output does not conduct during this time

Repeatability
15 microseconds

Tri-Color LED Sensing Image
Rectangular: 1.2 mm x 3.8 mm (0.05" x 0.15") at 10 mm (0.39") from face of lens; image oriented either parallel or perpendicular to sensor length
Red: 636 nm **Green:** 525 nm **Blue:** 472 nm

Construction:
Housing: Zinc alloy die-cast and steel housing with black painted finish and o-ring sealed lens and lens port cap
Lens: Acrylic
Lens port cap and lens holder: ABS
Push-buttons: Thermoplastic elastomer
Labels: Polycarbonate

Adjustments

MODE Push-button
Selects Operating Mode

TEACH Push-button
Initiate Teach from STATIC or DYNAMIC Mode

Both Push-buttons >2 s
Enter Sensor Set-up (only accessible from RUN Mode)

Remote Input (gray wire)
Input for remote Set-up of the sensor (PLC compatible)

Connections
PVC-jacketed 5 conductor 2 m (6.5') or 9 m (30') cable with internal strain relief
Integral 5-pin Euro-style QD fitting
150 mm (6") pigtail with 5-pin Euro-style QD fitting

Indicators
(LO) **Light Operate:** Red
(⏲) **Off-delay:** Red
(DO) **Dark Operate:** Red
(OUT) **Output:** Yellow
(⏻) **Power:** Green
Mode: Green
(R) Red: Red
(G) Green: Green
(B) Blue: Blue

Operating Conditions
Temperature: -10° to -55° C (+14° to 131° F)
Storage Temperature: -20° to +80° C (-4° to 185° F)
Maximum Relative Humidity: 90% at 50° C (non-condensing)

Environmental Rating
IEC IP67

Vibration and Mechanical Shock
All models meet IEC 68-2-6 and IEC 68-2-27 testing criteria

Application Notes
1. NPN OFF-state leakage current is < 200 µA for load impedances > 3kΩ or optically isolated loads. For load current of 100 mA, leakage is < 1% of load current.
2. Do not mount the sensor directly perpendicular to shiny surfaces; position it at approximately a 15° angle in relation to the sensing target (see Installation Notes).
3. Minimize web or product "flutter" whenever possible to maximize sensing reliability.

Overview

R58B Registration Mark Sensors offer maintenance-free, solid-state reliability for typical color contrasts found in product and material registration applications. Fast 50-microsecond sensing response produces excellent registration repeatability, even in ultra-high-speed applications. This fast response, coupled with the small 1.2 x 3.8 mm (0.05" x 0.15") sensing image, allows the detection of small and inconspicuous registration marks.

R58B sensors feature TEACH mode sensitivity adjustment by presenting two sensing conditions to the sensor. TEACH mode has two options: Static TEACH and Dynamic TEACH. Static TEACH is used to position the two sensing conditions individually. Dynamic TEACH provides a means for teaching a series of conditions on-the-fly; the R58B samples the sensing events and automatically sets the switchpoint between the lightest and darkest conditions. The sensor then determines which sensing condition is present for the shortest time and assigns the Output ON condition to that event (therefore, LO/DO selection is automatic). If necessary, the LO/DO setting can be reversed in Set-up mode.

The sensor uses a tri-color LED during either teach process and automatically selects a red, green, or blue sensing beam, based on the contrast between the registration mark and its background. For applications where the user wishes to select the sensing beam color, individual colors may be enabled/disabled in Set-up mode.

The discrete NPN or PNP output can be configured in Set-up mode to include a 30 millisecond OFF-delay if required.

Sensor Set-up configuration may be accomplished either by using the push-buttons on the sensor, or by supplying input pulses via the remote input. The push-buttons may be disabled via the remote input.

The construction of the R58B is extremely robust; with a die-cast metal housing, plastic optics, and IP67 leakproof design for harsh sensing environments.

Sensor Features

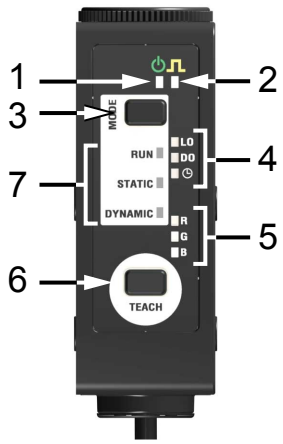

Figure 1. Features
1. Power LED
2. Output LED
3. Mode Selection Push-button
4. Output Configuration LEDs
5. Emitter Color Configuration LEDs
6. TEACH Push-button
7. Mode Configuration LEDs

Sensor Mode Description

The R58B Registration Mark Sensors have 3 user selectable modes of operation: Run Mode, Static Mode, and Dynamic Mode. The"active" Mode is selected by pressing the Mode push-button or via the remote input. For simplicity of operation, only certain features are enabled in each mode as described below.

- **All Modes:** The sensor detects registration marks based on the last taught conditions. Via the remote line the user may configure the operational mode and the output settings, enable/disable emitter color(s), lock/unlock push-buttons, and restore factory defaults.
- **Run Mode:** There is no TEACH button functionality in RUN Mode. Press and hold both push-buttons > 2 seconds to enter Set-up mode to configure the output settings or enable/disable emitter color(s).
- **Static Mode:** Using the TEACH push-button, the sensor can be quickly taught new sense conditions using a simple *Static TEACH Procedure* on page 5.
- **Dynamic Mode:** Using the TEACH push-button, the sensor can be taught on-the-fly using a simple *Dynamic TEACH Procedure* on page 6.

LED	Indicates	
Power	**ON:** Normal sensor operation **OFF:** Set-up Mode **Momentary Flashing:** Push-button lock-out status	
Output	**ON:** Output is conducting **OFF:** Output is not conducting **Slow Flash:** TEACH Static OFF condition or Dynamic TEACH active **Fast Flash:** Re-TEACH Static ON condition (prior static TEACH failed)	
Light Operate	**ON:** Light Operate (LO) operation	
Dark Operate	**OFF:** Dark Operate (DO) operation	
Off Delay	**ON:** 30 ms pulse stretcher (OFF-delay) is active **OFF:** No OFF-delay	
Red, Green, Blue	Normal Operation	**ON:** Active emitter LED color
	Set-up Mode	**ON:** Enabled emitter LED colors **Flashing:** Allow Enabling/ Disabling of emitter LED colors
Run	**ON:** Run Mode is active	
Static	**ON:** Static Mode is active	
Dynamic	**ON:** Dynamic Mode is active	

Sensor Set-up

The R58B will power up in normal operation and begin sensing using the settings from the most recently taught registration mark. The sensitivity of the R58B may be quickly optimized to the application by using one of two available TEACH modes: Static TEACH or Dynamic TEACH.

- **Static TEACH:** Both the Output ON and Output OFF conditions are presented to the sensor, and the sensitivity and emitter color are automatically selected to maximize sensing contrast.
- **Dynamic TEACH:** The registration mark and background are presented during actual sensing conditions (i.e. web moving) and the sensitivity and emitter color are automatically selected to maximize sensing contrast.

The sensor's operating parameters may be configured either via its push-buttons or via the remote input (gray wire). While in RUN mode, press and hold both buttons > 2 seconds to enter Set-Up mode. Pressing the Mode Push-button will cycle through the 4 possible output settings. Pressing the TEACH Push-button will cycle through the 7 combinations of emitter LED color. The indicators will update to show the currently selected configuration. Press both buttons for > 2 s or wait 60 s to exit Set-up mode.

To use the remote input, connect the gray wire to a PLC or a NO (normally open) switch to 0V dc. Set-up using the remote line is accomplished by following a sequence of input pulses (see following procedures). The duration of each pulse, and the period between multiple pulses, is defined as "T".

0.04 seconds ≤ "T" ≤ 0.8 seconds



Static TEACH Procedure

	Procedure	Push-button	Remote Input
1.	Enter Static Mode by pressing the Mode select push-button or via the remote input; see *Remote Configuration Flowchart* on page 7.	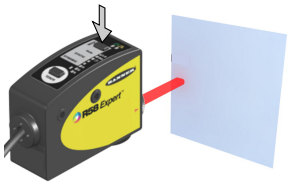	Select Static Mode; see *Remote Configuration Flowchart* on page 7
2.	Align the light spot to the output ON condition. "Mark Operate" is shown.	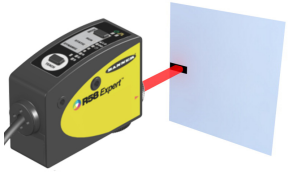	
3.	Press the TEACH push-button or single-pulse the remote input to LEARN the output ON condition. **NOTE:** The Output and Emitter LEDs will flash at a 2Hz rate to indicate that a TEACH is in progress.	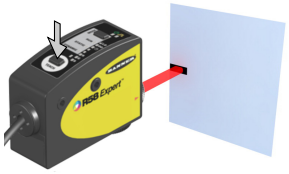	 1X
4.	Align the light spot to the output OFF condition.	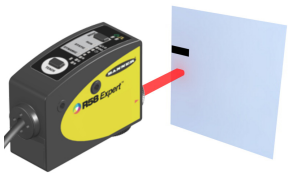	
5.	Press the TEACH push-button or single-pulse the remote input to LEARN the output OFF condition. Sensor evaluates contrast and returns to normal operation. If inadequate contrast, the Output and Emitter LED flash rate will increase to 4Hz to indicate that the TEACH failed. Repeat TEACH starting at Step 2.	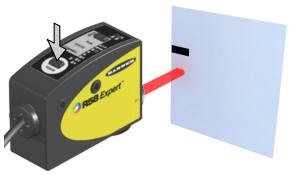	 1X

Dynamic TEACH Procedure

	Procedure	Push-button	Remote Input
1.	Enter Dynamic Mode by pressing Mode select push-button or via the remote input; see *Remote Configuration Flowchart* on page 7.	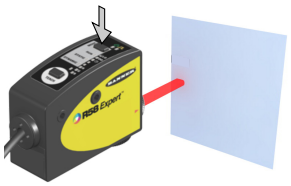	Select Dynamic Mode; see *Remote Configuration Flowchart* on page 7
2.	Align sensor to either mark or background.	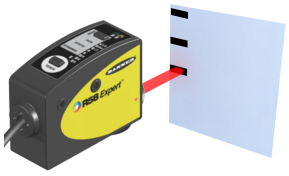	
3.	Press the TEACH push-button or single-pulse the remote line to start Dynamic sampling. **NOTE:** The Output LED will flash at a 2Hz rate to indicate that a Dynamic TEACH is in progress.	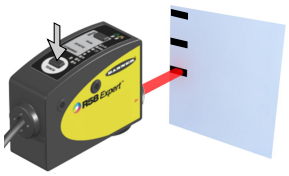	
4.	Start moving the web past sensor. Present at least 2 marks.	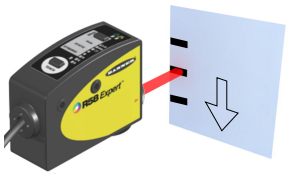	
5.	Press the TEACH push-button or single-pulse the remote line to end Dynamic sampling. Sensor evaluates contrast. If adequate mark to background contrast, the sensor returns to normal operation using the new sense settings. If not, the Output Configuration and Emitter Color Configuration LEDs will alternately flash 4x to indicate that the TEACH failed and the sensor will return to normal operation without changing the sense settings.	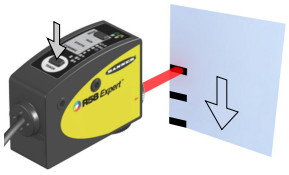	

Remote Configuration Flowchart

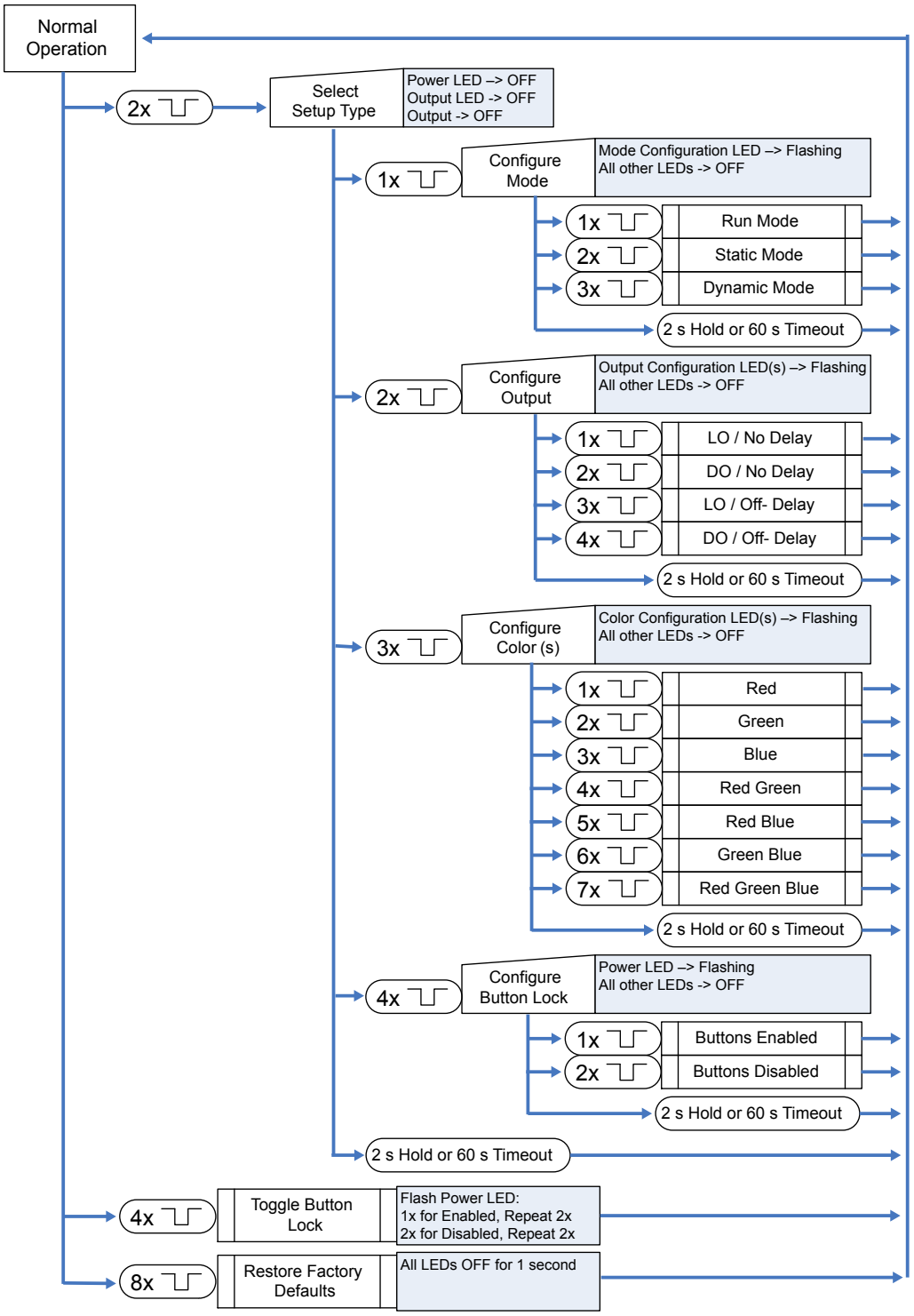

A click (T) is defined as 40 ms. < T < 800 ms

Installation Notes

The R58B Registration Mark Sensors includes a total of eight size M5 threaded holes used for mounting (see *Dimensions* on page 9). These threaded holes are positioned to match the mounting hole patterns common to other registration mark sensors. The R58B includes four M5 x 0.8 x 6 mm stainless steel cap screws and a hex key wrench.

The R58B focus is 10 mm (0.39") from the lens surface. The R58B must be mounted within 3 mm (0.12") of this distance from the surface of the material for reliable sensing (Figure 2).

Consider the following when mounting the R58B:

- Whenever possible, it is a good idea to sense a web material at a location where it passes over a tension bar or roller, to minimize the adverse effects of web "flutter" or sag (Figure 3).
- When sensing a registration mark on a reflective (shiny) material, mount the R58B at an angle which places the lens centerline at approximately 15° off perpendicular to the material's surface (Figure 4). This "skew angle" will minimize strong direct reflections (which tend to overwhelm the sensor), and allow the sensor to discern the relatively small optical contrast offered by differences in colors.
- Clear materials are poor reflectors of light. When sensing a mark printed on a clear material (e.g., a clear poly web), position a reflective surface directly behind the clear material to return light to the R58B. The printed mark, regardless of its color, then becomes the dark condition, as it blocks the light from reaching the reflective surface. Most clear materials are also shiny; it is important to include a 15° skew angle when sensing clear materials (Figure 4).

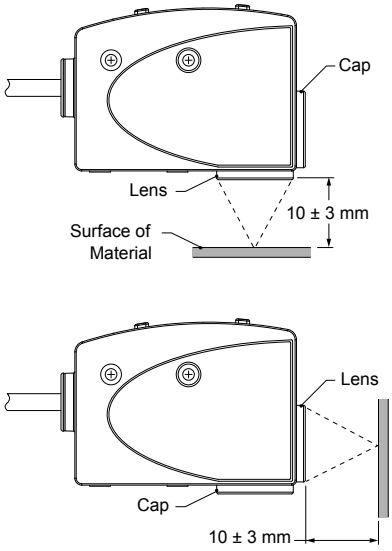

Figure 2

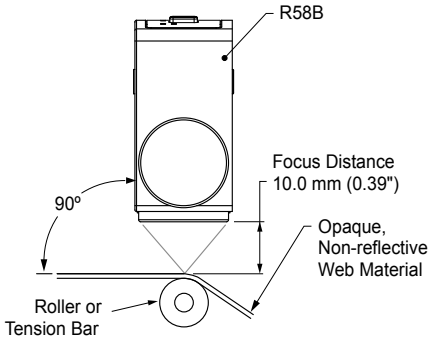

Mount the R58B Perpendicular to non-reflective (matte) materials

Figure 3

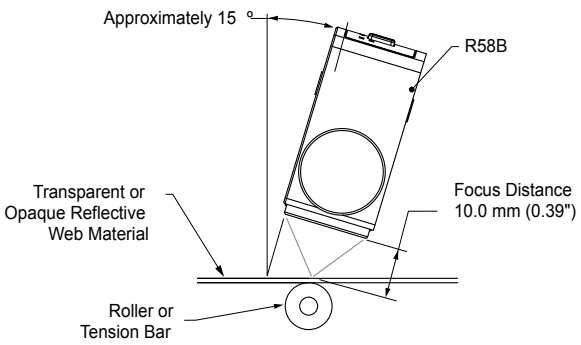

Mount the R58B at approximately 15 ° from perpendicular to transparent and opaque reflective materials

Figure 4

Lens Location

The lens may be installed at either of two lens ports (see Figure 2). The lens and the lens port cap are both threaded and may be exchanged by hand; no tools are required. The lens and cap both include an o-ring seal.

NOTE: The lens port cap must be installed on the unused port for reliable operation. Fully seat the lens cap to ensure a liquid-tight seal.

Dimensions

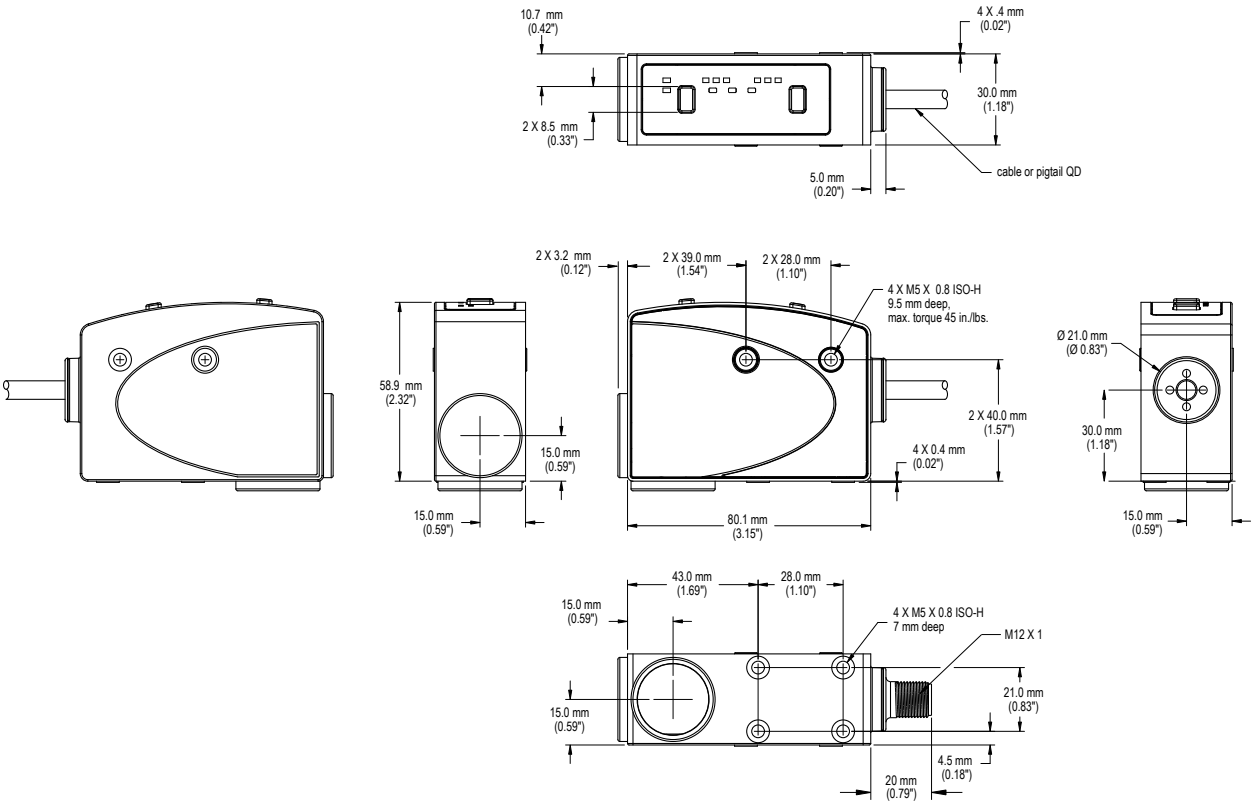

Hookups

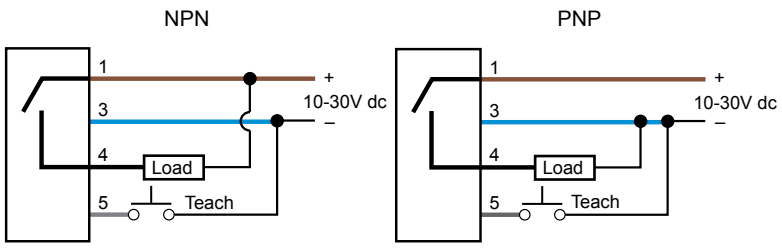

Wiring Key:

1 = Brown

2 = White (No connection)

3 = Blue

4 = Black

5 = Gray

Accessories

Quick-Disconnect (QD) Cordsets

5-Pin M12/Euro-Style Cables – Single-Ended, with Shield			
Model	**Length**	**Description**	
MQDEC2-506	2 m (6')	5-pin cable, Euro-style straight with shield	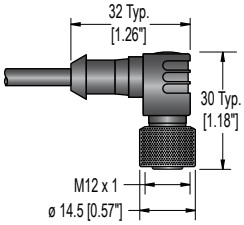
MQDEC2-515	5 m (15')		
MQDEC2-530	9 m (30')		
MQDEC2-506RA	2 m (6')	5-pin cable, Euro-style right-angle with shield	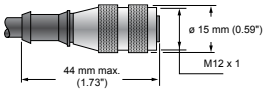
MQDEC2-515RA	5 m (15')		
MQDEC2-530RA	9 m (30')		

5-Pin M12/Euro Pinout (Female)

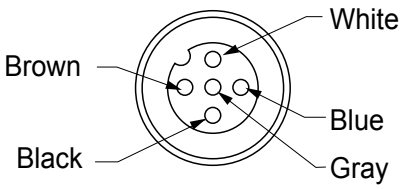

Accessory Mounting Brackets

SMB55A • 15° offset bracket • 12-gauge stainless steel		**SMB55F** • Flat-mount bracket • 12-gauge stainless steel	
SMB55RA • Right-angle bracket • 12-gauge stainless steel		**SMB55S** • 15° offset bracket • 12-gauge stainless steel	

Replacement Lens

Model	Description	
UC-R55	Replacement lens for R58A, R58B, and R58E	

Contact Us

For more information: Contact your local Banner representative or Banner Corporate Offices around the world.

Banner Corporate Headquarters
Banner Engineering Corp.
9714 Tenth Ave. North
Mpls., MN 55441
Tel: 763-544-3164
www.bannerengineering.com
sensors@bannerengineering.com

Asia — China
Banner Engineering China
Shanghai Rep Office
Rm. G/H/I, 28th Flr.
Cross Region Plaza
No. 899, Lingling Road
Shanghai 200030 CHINA
Tel: 86-21-54894500, Fax: 86-21-54894511
www.bannerengineering.com.cn
sensors@bannerengineering.com.cn

Europe
Banner Engineering Europe
Park Lane
Culliganlaan 2F
Diegem B-1831
BELGIUM
Tel: 32-2 456 07 80, Fax: 32-2 456 07 89
www.bannereurope.com
mail@bannereurope.com

Asia — Taiwan
Banner Engineering Taiwan
8F-2, No. 308
Section 1, Neihu Road
Taipei 114
Tel: 886-2-8751-9966, Fax: 886-2-8751-2966
www.bannerengineering.com.tw
info@bannerengineering.com.tw

Latin America
Contact Banner Engineering Corp. (US) or e-mail:
Mexico:*mexico@bannerengineering.com*
Brazil: *brasil@bannerengineering.com*

Asia — Japan
Banner Engineering Japan
Cent-Urban Building 305
3-23-15, Nishi-Nakajima
Yodogawa-Ku, Osaka 532-0011
JAPAN
Tel: 81-6-6309-0411, Fax: 81-6-6309-0416
www.bannerengineering.co.jp
mail@bannerengineering.co.jp

Asia — India
Banner Engineering India
Pune Head Quarters
Office No. 1001
Sai Capital Opp. ICC
Senapati Bapat Road
Pune 411016 INDIA
Tel: 91-20-66405624, Fax: 91-20-66405623
www.bannerengineering.co.in
india@bannerengineering.com

BANNER®
more sensors, more solutions

Warranty: Banner Engineering Corporation warrants its products to be free from defects for a period of one year. Banner Engineering Corporation will repair or replace, free of charge, any product of its manufacture found to be defective at the time it is returned to the factory during the warranty period. This warranty does not cover damage or liability for the improper application of Banner products. This warranty is in lieu of any other warranty either expressed or implied.