Surge-Trap® K - K1 4PG

Power Line SPDs

DIN RAIL - IEC TYPE 1+2



General Data

Internal configuration	3+1
No. Poles	4-Pole
No. DIN rail modules	4
Network configuration	TT, TNS
IEC SPD Type	Class I+II
EN SPD Type	Type 1+2
UL SPD Type	Type 1 Component Assembly
Format	Pluggable
Protection Modes	L-N / N-PE
Product standards	*IEC 61643-11 *EN 61643-11 *UL 1449 5th Edition

PART NUMBERS		
XXX	**275**	**320**
K1-4PG**XXX**	44120400	44120408
K1-4PG**XXX**-M (with Microswitch)	44120401	44120409

SURGE PROTECTION DEVICE (SPD) - IEC TECHNICAL FEATURES		
K1-4PG**XXX**, K1-4PG**XXX**-M (with Microswitch)	**275**	**320**
Maximum continuous operating voltage (AC) - Uc (L-N) [V]	275	320
Maximum continuous operating voltage (AC) - Uc (N-PE) [V]	255	
Nominal voltage AC 50-60 Hz - Un [V]	230/400	277/480
Nominal discharge current (8/20) - In (L-N) [kA]	20	
Nominal discharge current (8/20) - In (N-PE) [kA]	50	
Max Discharge Current (8/20) - Imax (L-N) [kA]	50	
Max Discharge Current (8/20) - Imax (N-PE) [kA]	100	
Lightning impulse current (10/350) - Iimp (L-N) [kA]	12.5	
Lightning impulse current (10/350) - Iimp (N-PE) [kA]	50	
Voltage protection level at In - Up (L-N) [kV]	≤1,5	
Voltage protection level at In - Up (L-PE) [kV]	≤1,8	
Voltage protection level at In - Up (N-PE) [kV]	≤1,5	
Maximum back-up fuse [A [gG]]	315	
Short circuit withstand- Isccr [kA]	25	
Following current - Ifi [A]	100	
Residual current- Ipe [µA]	<10	
Response time - tA (L-N) [ns]	≤25	
Response time - tA (N-PE) [ns]	≤100	
Specific energy by pole (10/350 µs) - W/R (L-N) [kJ/ohm]	39	
Specific energy by pole (10/350 µs) - W/R (N-PE) [kJ/ohm]	625	
TOV 5s (LV systems, withstand)- Ut(L-N) [V]	337	403
TOV 120min (LV systems, fail safe)- Ut(L-N) [V]	442.5	528
TOV 200 ms (HV Systems, withstand) - Ut (N-PE) [V]	1200	
Dynamic thermal disconnection	Yes	
Thermal protection behaviour	OCM (Open Circuit Mode)	
No. of ports	1	

DATASHEET

This document is subject to change at any time without notice ep.mersen.com | Lepanto 49 · 08223 Terrassa, Barcelona Spain © 2024 Cirprotec SLU | All rights reserved

Surge-Trap® K - K1 4PG

Power Line SPDs

DIN RAIL - IEC TYPE 1+2

SURGE PROTECTION DEVICE (SPD) - UL TECHNICAL FEATURES		
K1-4PG**XXX**, K1-4PG**XXX**-M (with Microswitch)	**275**	**320**
Nominal discharge current (8/20) - In [kA]	20	
Maximum continuous operating voltage - MCOV (L-L) [V]	550	640
Maximum continuous operating voltage - MCOV (L-N) [V]	275	320
Maximum continuous operating voltage - MCOV (L-G) [V]	275	320
Maximum continuous operating voltage - MCOV (N-G) [V]	305	
Voltage protection rating - VPR (L-L) [V]	2000	
Voltage protection rating - VPR (L-N) [V]	1200	
Voltage protection rating - VPR (L-G) [V]	1500	
Voltage protection rating - VPR (N-G) [V]	1000	
Short-Circuit Current Rating-SCCR [kA]	100	

MECHANICAL AND ENVIRONMENTAL FEATURES		
K1-4PG**XXX**, K1-4PG**XXX**-M (with Microswitch)	**275**	**320**
Temperature range [ºC]	-40 ... 85	
Humidity range [%]	5 ... 95	
Max. Altitude [m]	4000	
Indication System Type	Green (OK) / Not green (replace)	
Insulating material	PA6 CT1 & PA66 CT1	
Housing color	Grey RAL 7035	
Enclosure - IP	IP20	
Flammability class	UL94 V-0	
Solid conductor cross section	1,5…35mm²	
Stranded conductor cross section	1,5…25mm²	
Torque rating [N m]	3	
Remote indication conductor cross section [mm²]	0.5 ... 1.5	
Remote indication switching capacity [V/A]	AC: 250/0.5 DC: 30/1	

DIMENSIONS AND WEIGHT

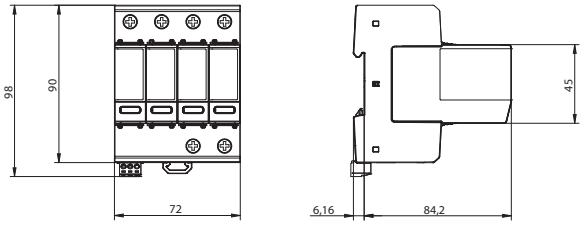

K1-4PG**XXX** K1-4PG**XXX**-M (with Microswitch)	**275**	**320**
Net Weight [kg]	0.614	0.616
Gross weight [kg]	0.658	0.661
Packaging dimensions (H x W x L) [mm]	97 × 78 × 118	

INTERNAL CONFIGURATION

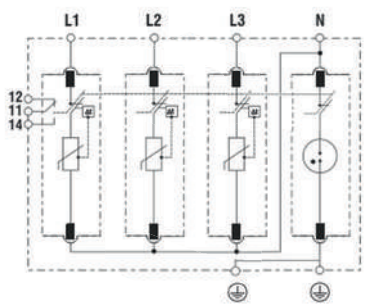

REPLACEMENT CARTRIDGES

K1-4PG**XXX** K1-4PG**XXX**-M (with Microswitch)	**275**	**320**
K1-**XXX** (Line)	44120001	44120003
K1-N (Neutral)	44120000	

DATASHEET

This document is subject to change at any time without notice ep.mersen.com | Lepanto 49 · 08223 Terrassa, Barcelona Spain © 2024 Cirprotec SLU | All rights reserved