COMBI 206 BK / 3xWAGO 221-413

Junction box 85x49x51mm, plastic, RAL 9005, with 3x WAGO 221-413



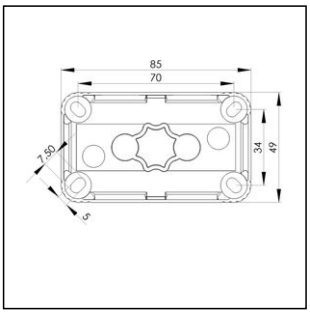

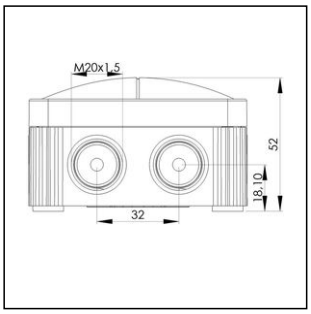

Products may differ in size, colour and appearance to those shown. If you require further information or customisation, please contact us directly.

Material	Polypropylene
Material sealing gasket	TPE
Temp. range min	-30 °C
Temp. range max	100 °C
Temperatures during install.	-5 °C - 60 °C
Protection class	IP66 / IP67
Glow wire test	750 °C
Voltage	400 V
Rated cross section	1,5 mm²
Terminals/poles	4 mm²
Fixing	4 internal openings
Ø cable diameter min	3 mm
Ø cable diameter max	12 mm
External dimensions LxWxH	85 x 49 x 51mm
Using for cable gland	
Product Color	RAL 9005
Order no. RAL 9005	10109900
Type	COMBI 206 BK / 3xWAGO 221-413
Packing unit	10
ETIM-Classification	EC002600

Remarks:

IP66: using the membrane entry

IP67: using the threaded entry together with ESKV cable gland

Equipment:

Your Contact:
WISKA Hoppmann GmbH
Kisdorfer Weg 28 · 24568 Kaltenkirchen · Germany
☎ +49-4191-508-0 · 🖷 +49-4191-508-209
contact@wiska.de · www.wiska.com

Other technical data on request / subject to change without notice

- 6 M20 threaded membrane entries

- 2 membrane cable entries through rear

- 4 captive cover screws

- including 3x WAGO 221-413 enclosed loose

Fixing:

With 4 internal openings outside of the sealing area

Recommended accessories

MP-S Mounting plate small	10105774
ZER 4-12	10109800

25.03.2021

Your Contact:
WISKA Hoppmann GmbH
Kisdorfer Weg 28 · 24568 Kaltenkirchen · Germany
☎ +49-4191-508-0 · 🖷 +49-4191-508-209
contact@wiska.de · www.wiska.com

Other technical data on request / subject to change without notice

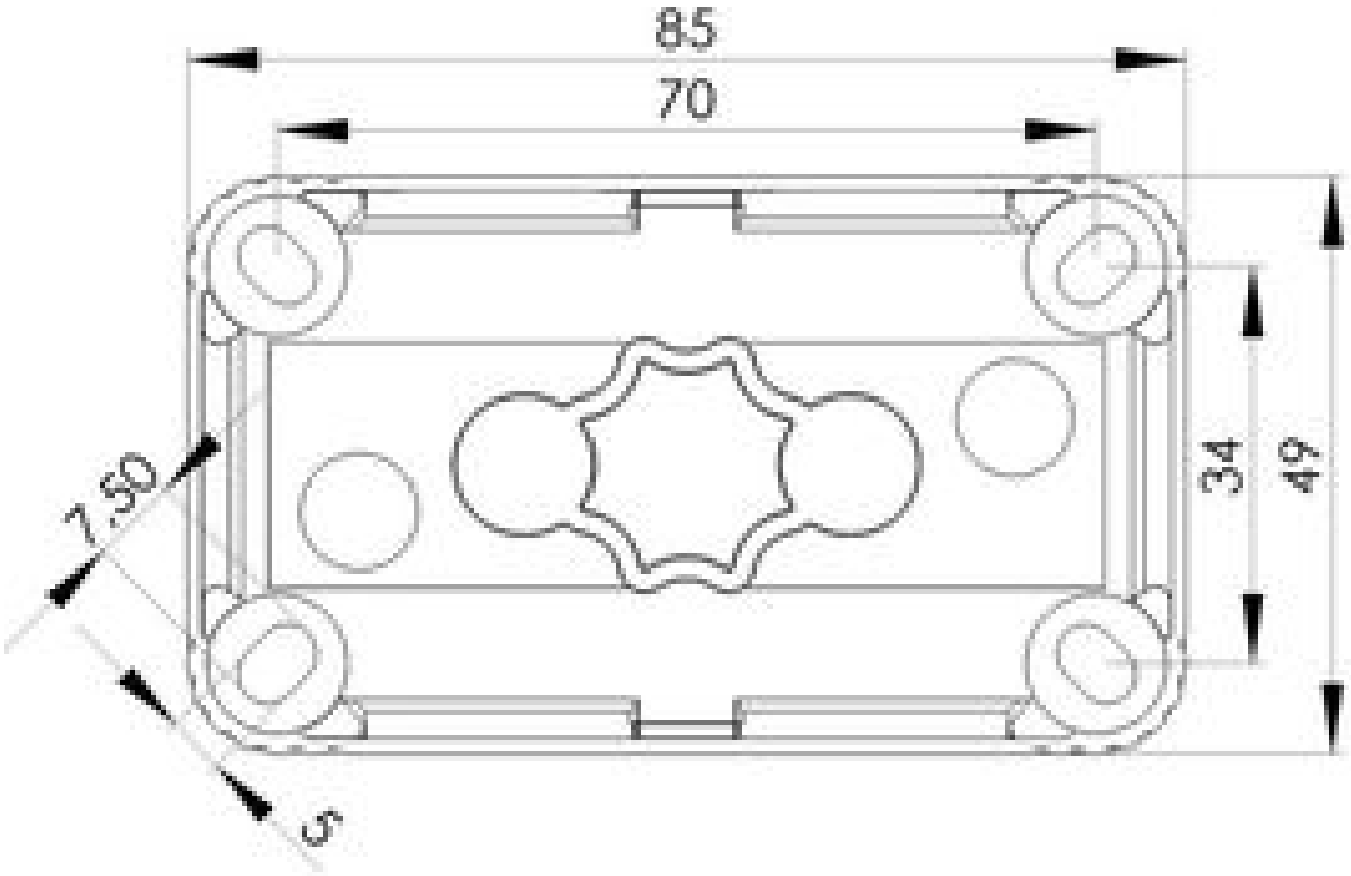

Your Contact:
WISKA Hoppmann GmbH
Kisdorfer Weg 28 · 24568 Kaltenkirchen · Germany
☎ +49-4191-508-0 · 🖷 +49-4191-508-209
contact@wiska.de · www.wiska.com

Other technical data on request / subject to change without notice

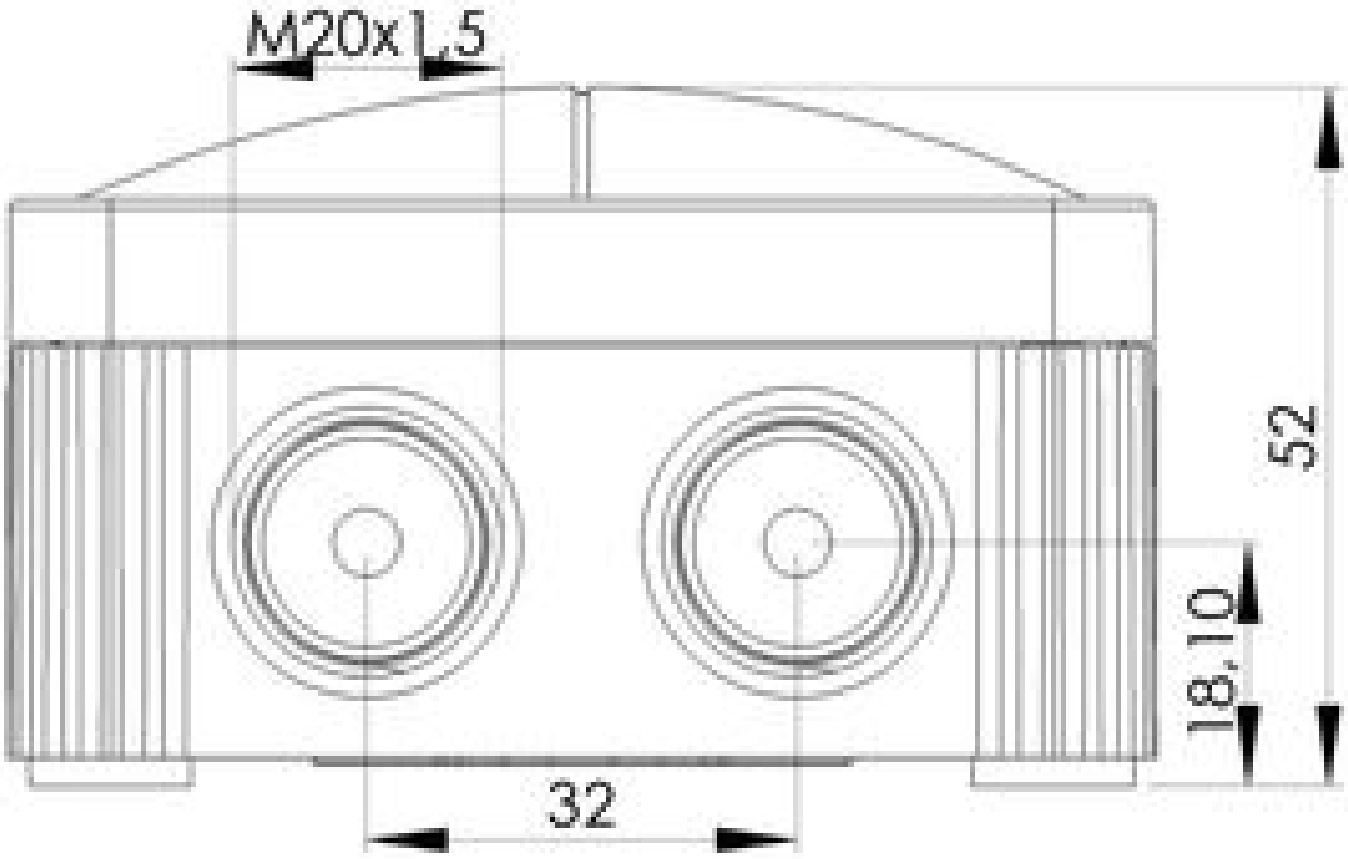

Your Contact:
WISKA Hoppmann GmbH
Kisdorfer Weg 28 · 24568 Kaltenkirchen · Germany
☎ +49-4191-508-0 · 🖷 +49-4191-508-209
contact@wiska.de · www.wiska.com

Other technical data on request / subject to change without notice