Isolation 3/2-way valves - Series MX

Product code: MX2-3/4-V01

Datasheet creation date: 11/12/2025 08:35

Check the most updated document online *click here*



TECHNICAL DATA

Series	MX
Size	2
Ports (IN - OUT)	3/4 = G3/4
3/2-way valve	V
Design type	01 = lockable manual control
Flow direction	= from left to right (standard)

Products designed for industrial applications. General terms and conditions for sale are available on www.camozzi.com.
This document contains a brief description of the products offered by Camozzi Automation at time of publication.
For more complete and up to date information about the Camozzi Automation product range, please refer to our online catalogue at https://shop.camozzi.com

Isolation 3/2-way valves - Series MX

Product code: MX2-3/4-V01

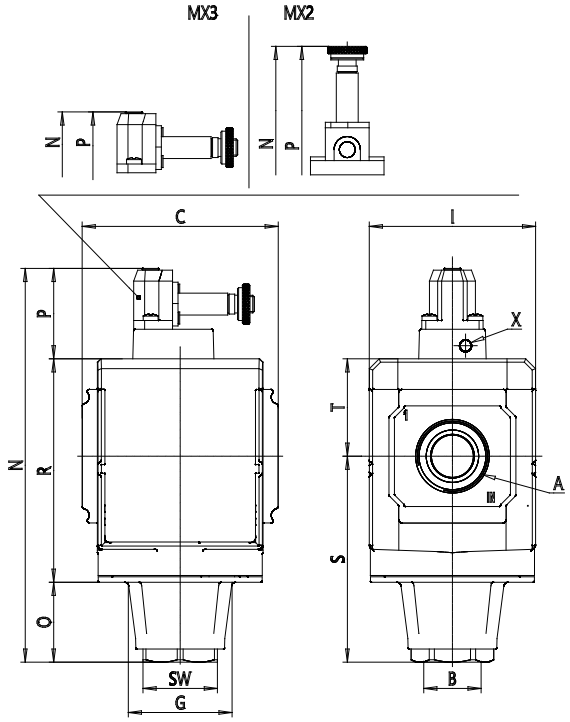

DIMENSIONS

	G3/4
(mm)	G 1/2
(mm)	70.0
(mm)	26
(mm)	34.5
(mm)	68
(mm)	9
(mm)	8
(mm)	152.0
(mm)	13
(mm)	51.0
(mm)	31
(mm)	88
(mm)	63.5
(mm)	27
(mm)	37.5
	-
Y (piloting)	-
Weight (kg)	0.5

Products designed for industrial applications. General terms and conditions for sale are available on www.camozzi.com.
This document contains a brief description of the products offered by Camozzi Automation at time of publication.
For more complete and up to date information about the Camozzi Automation product range, please refer to our online catalogue at https://shop.camozzi.com