Hand Held Instrument (1593Y)

Top View of Assembly

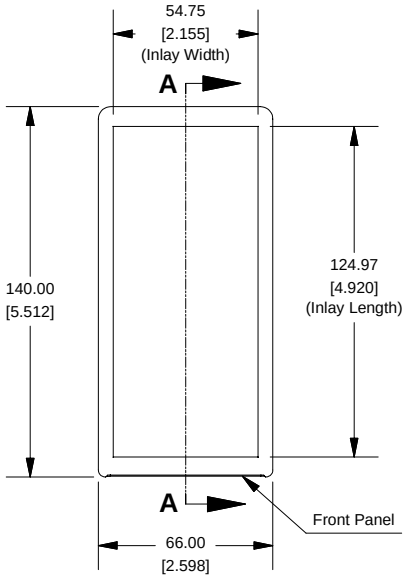

SECTION A-A
(Side View Inside Assembly)

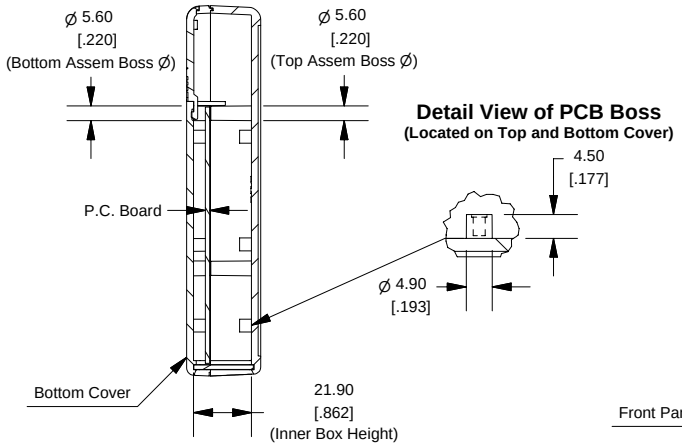

Detail View of PCB Boss
(Located on Top and Bottom Cover)

End View of Assembly

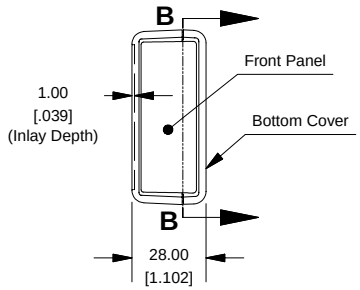

SECTION B-B
(Inside of Bottom Cover)

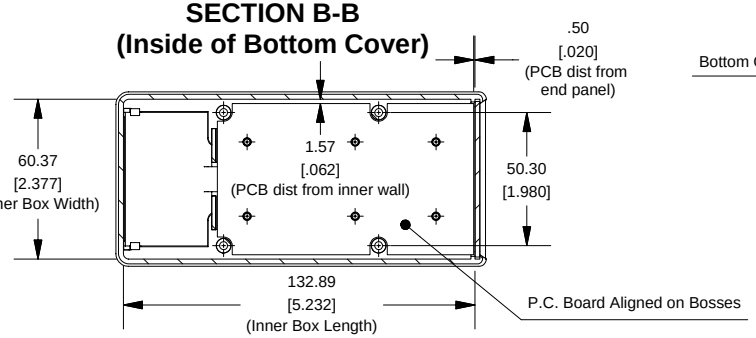

Front/Rear Panel
(Dashed Line Indicates Viewing Area)

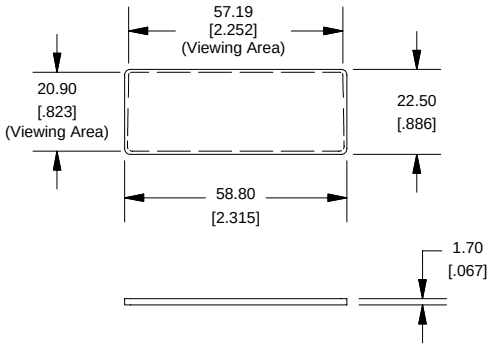

Maximum P.C. Board Size

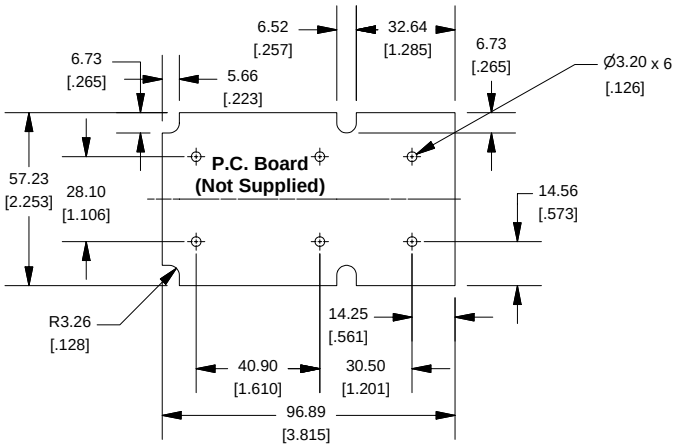

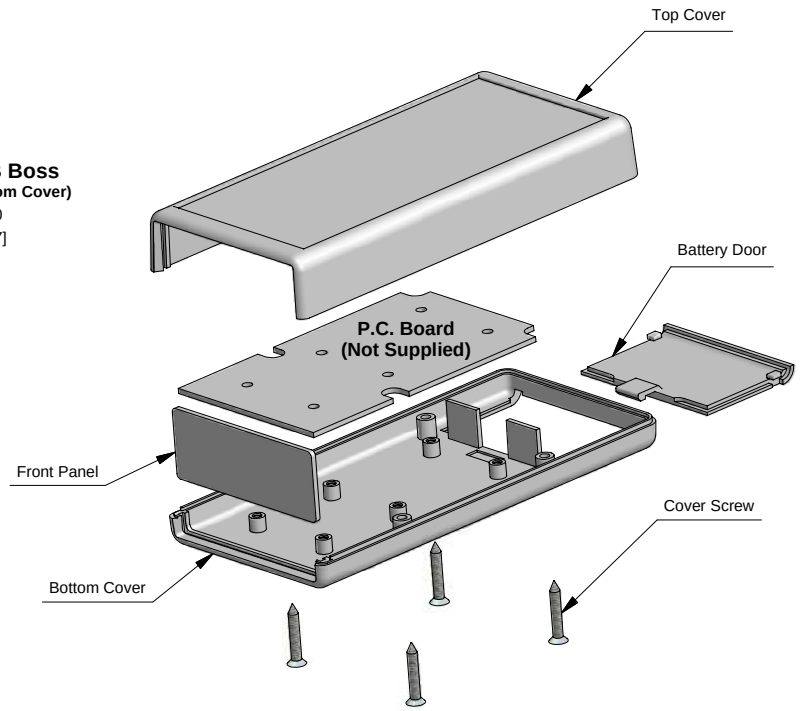

NOTE
Purchased assembly includes top and bottom cover, front panel (plastic), battery door and 4 cover screws.

PART NUMBERS	
1593Y Enclosure	
Black Enclosure	1593YBK
Grey Enclosure	1593YGY
ACCESSORIES	
Cover Screws (Pkg 100) [#4 x 3/4" self-tapping oval head (19.1mm)]	1593QS100
P.C. Board Screws [#4 x 1/4" self-tapping (6.4mm)]	1593ATS50 (Pkg 50) 1593ATS100 (Pkg 100)
Belt or Pocket Clip	1599CLIP (Black) 1599CLIPGY (Grey)
Infrared Panels (Pkg 10)	1593PIR10
Battery Holder Kit for:	
1 AA Cell	BH1AAWKIT
2 AA Cells	BH2AAWKIT
1 AAA Cell	BH1AAAWKIT
2 AAA Cells	BH2AAAWKIT
3 AAA Cells	BH3AAAWKIT
4 AAA Cells	BH4AAAWKIT
1 - 9V Cell	BS61KIT

HAMMOND MANUFACTURING™

www.hammondmfg.com