RAFIX 16, illuminated pushbutton, flat bezel, square collar alignable in rows, bezel green



fields of application

- Measurement-control-regulation
- Electrical engineering
- Mechanical and system engineering
- Industrial robots

special features

- Robust - also suitable for operation with gloves
- Optimal for switching large currents (max. 250 V / 6 A)
- Actuators can be arranged in close rows, as wiring is required axially from behind
- Degree of protection: IP 65 on front side
- Switching elements with silver contacts (max. 250 V / 6 A) or gold contacts (max. 35 V / 0.25 A)
- Connection types: screw connection, plug-in connection, PCB plug-in socket
- Mounting diameter 16.2 mm
- Illumination with LED possible, socket: W 2 x 4.6d

description

RAFIX control devices are modular units consisting of several parts. In the RAFIX 16 family, they always consist of an actuating element and a switching element, or of an indicator lamp and a lamp socket. Actuating elements (such as pushbuttons or emergency stop actuators) have the specified tactility, reset and function only when assembled with the appropriate switching elements. For illuminated actuators, please use switching elements with lamp socket.

With RAFIX 16 actuators, you can choose between three collar shapes: round, square or square side-by-side, where the pushbuttons can be lined up seamlessly. The mounting diameter is 16.2 mm according to the standard. The anti-rotation lug can be easily removed with a screwdriver if necessary.

technical data

general

Bezel color	green
Property of bezel / mushroom	transparent
Collar shape	square alignable in rows
Operating temperature, min.	-25 °C
Operating temperature, max.	70 °C
Storage temperature, min.	-40 °C
Storage temperature, max.	85 °C
illuminated	Yes
Packaging	Box

direct links

- RAFI eCatalog

The information in this data sheet only contains general descriptions and / or performance features, which may not apply precisely as described to the respective application, and which my change due to further product enhancements. The technical data, illustrations and other information about our products are the mere results of individual technical testing. These descriptions and other product features are only binding if they expressly agreed upon at the time of the conclusion of a binding contract. In all other cases, we reserve the right to make technical changes as well as changes of availability. Pictures and other graphic illustrations are approximations only. All product names may be trademarks or brand names of the RAFI Group or any other sub-supplier of RAFI. The use of such by any third parties for their own purposes may infringe the rights of the respective entity holding those rights.

RAFI GmbH & Co. KG

Ravensburger Str. 128-134
88276 Berg / Ravensburg
Germany
www.rafi-group.com,
info.headquarters@rafi-group.com

Packaging unit	10 pcs.
net weight	6.6 g
Operating life	2,000,000 cycles
B10	2,600,000 cycles
Degree of protection, front side, according to DIN EN 60529	IP65
Environment resistance	IEC 60068-2-14 IEC 60068-2-30 IEC 60068-2-33 IEC 60068-2-78
MOQ order	100 pcs.
RoHS compliant	Yes
REACH compliant	Yes

mounting diameters

Outside dimension, length	24.95 mm
Outside dimension, width	24.95 mm
Outside dimension, height	26.35 mm
Mounting hole	16.2 mm
Mounting depth	44.7 mm
Installation height	7.15 mm
Grid, min.	25 x 25 mm
Collar dimension	24,95 x 24,95 mm

mechanical data

Operating force, max.	100 N
Operating travel, max.	3 mm
Fixing	Threaded ring
Threaded ring torque, max.	1.2 Nm

The information in this data sheet only contains general descriptions and / or performance features, which may not apply precisely as described to the respective application, and which my change due to further product enhancements. The technical data, illustrations and other information about our products are the mere results of individual technical testing. These descriptions and other product features are only binding if they expressly agreed upon at the time of the conclusion of a binding contract. In all other cases, we reserve the right to make technical changes as well as changes of availability. Pictures and other graphic illustrations are approximations only. All product names may be trademarks or brand names of the RAFI Group or any other sub-supplier of RAFI. The use of such by any third parties for their own purposes may infringe the rights of the respective entity holding those rights.

RAFI GmbH & Co. KG

Ravensburger Str. 128-134
88276 Berg / Ravensburg
Germany
www.rafi-group.com,
info.headquarters@rafi-group.com

drawings

Mounting hole drawing

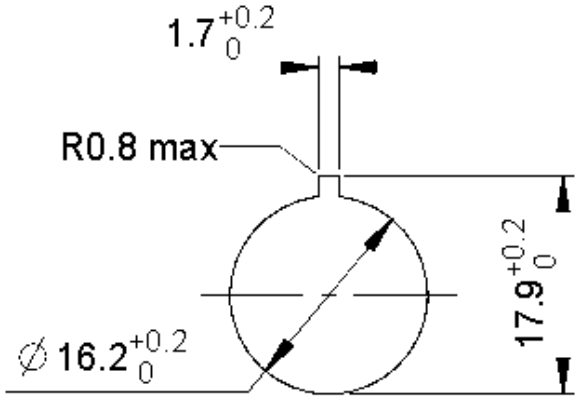

The information in this data sheet only contains general descriptions and / or performance features, which may not apply precisely as described to the respective application, and which my change due to further product enhancements. The technical data, illustrations and other information about our products are the mere results of individual technical testing. These descriptions and other product features are only binding if they expressly agreed upon at the time of the conclusion of a binding contract. In all other cases, we reserve the right to make technical changes as well as changes of availability. Pictures and other graphic illustrations are approximations only. All product names may be trademarks or brand names of the RAFI Group or any other sub-supplier of RAFI. The use of such by any third parties for their own purposes may infringe the rights of the respective entity holding those rights.

RAFI GmbH & Co. KG

Ravensburger Str. 128-134
88276 Berg / Ravensburg
Germany
www.rafi-group.com,
info.headquarters@rafi-group.com