ATL600

Automatic transfer switch controller with optical port for 2 power sources (144X144mm/5.7X5.7”), power supply 110...240VAC



Product designation			Automatic transfer switch controller for 2 power sources, three phase control, with LCD display, 110…240VAC supply
Product type designation			ATL600
General characteristics			
Number of controlled power sources		Nr.	2
Display			Backlit LCD graphic display 128x80 pixel
Languages		Nr.	5
Expandability			No
AC Power supply			
Rated supply voltage AC		VAC	110...240
Operating supply voltage range AC		VAC	90...264
Rated frequency		Hz	50/60
Operating frequency range		Hz	45...66
Immunity time for microbreakings			
	110VAC	ms	≤50
	220VAC	ms	≤250
Power consumption AC (Max)		VA	9.5
Voltage inputs			
Maximum rated voltage Ue			100...480VAC L-L (277VAC L-N)
Measurement range		V	50...576VAC L-L (333VAC L-N)
Frequency range		Hz	45…65
Measurement method			True root mean square (TRMS)
Input impedance			
	phase-phase	kΩ	>1.0MΩ
	phase-neutral	kΩ	>0.5MΩ
Measuring accurancy			±0.25% f.s. ±1 digit
Wiring mode			Single-phase, two-phase, three-phase line with or without neutral and balanced three-phase system
Digital inputs			
Number of digital input		Nr.	6

The characteristics described in this document are subject to updates or modifications at any time. The descriptions, technical and functional information, illustrations and instructions in this brochure are purely illustrative, and are consequently not contractually binding

Type of digital input			Negative
Digital current inputs		mA	<8
Low input signal		VDC	≤2.2
High input signal		VDC	≥3.4
Input signal delay		ms	≥50
Relay outputs			
Number of relay output		Nr.	7
Contact arrangement			6 x 1NO-SPST + 1 x C/O-SPDT
Electrical life		cycles	105
Mechanical life		cycles	107
Interface			
Front optical USB communication port			Yes, with CX01 USB dongle (optional)
Front optical Wi-Fi communication port			Yes, with CX02 Wi-Fi dongle (optional)
Functions			
Programmable source type			Single-phase, two-phase, three-phase with or without neutral
User alarms			Yes
Limits			Yes
Event logging			100
Ambient conditions			
Temperature			
	Operating temperature		
	min	°C	-30
	max	°C	+70
	Storage temperature		
	min	°C	-30
	max	°C	+80
Relative humidity		%	<80%
Maximum Pollution degree			2
Overvoltage category			3
Measurement category			III
Climatic sequence			Z/ABDM (IEC/EN 60068-2-61)
Shock resistance			15g (IEC/EN 60068-2-27)
Vibration resistance			0.7g (IEC/EN 60068-2-6)
Housing			
Execution			Flush mount
Material			Polycarbonate
Mounting			Flush mount - panel cut-out 138x138 mm
Degree of protection			IP40 on front, IP65 with optional gasket code EXP8001, IP20 on terminals

The characteristics described in this document are subject to updates or modifications at any time. The descriptions, technical and functional information, illustrations and instructions in this brochure are purely illustrative, and are consequently not contractually binding

ATL600

Automatic transfer switch controller with optical port for 2 power sources (144X144mm/5.7X5.7”), power supply 110...240VAC

Dimensions (W x H x D)	mm	144 x 144 x 52.2mm
Weight	g	600

Dimensions

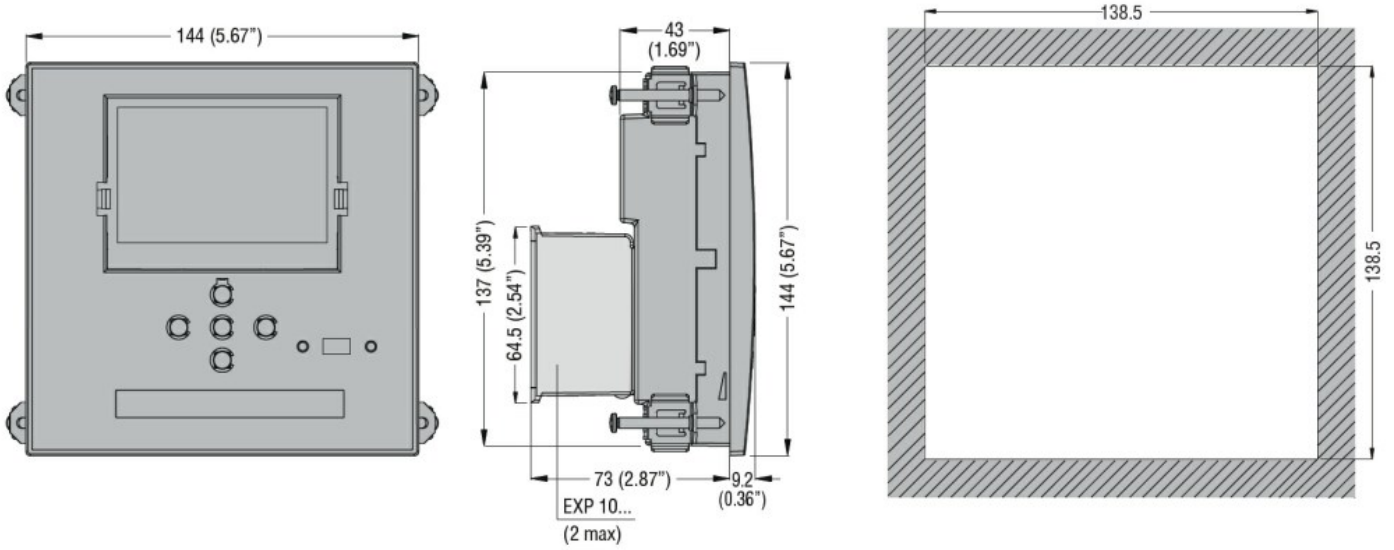

Wiring diagrams

Connection diagrams
Motorised breaker control

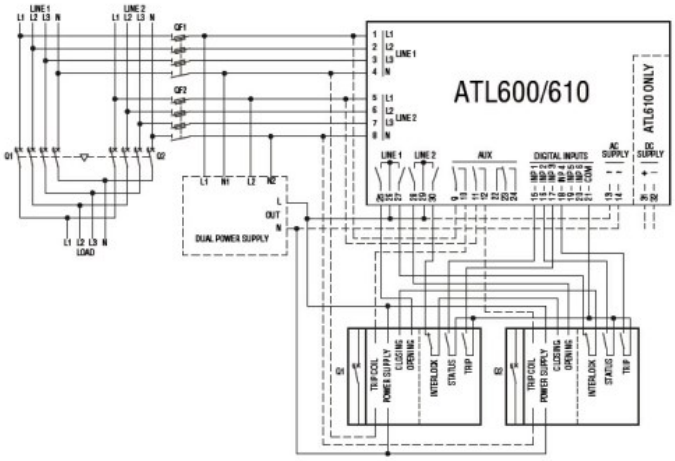

Connection diagrams
Motorised changeover switches control

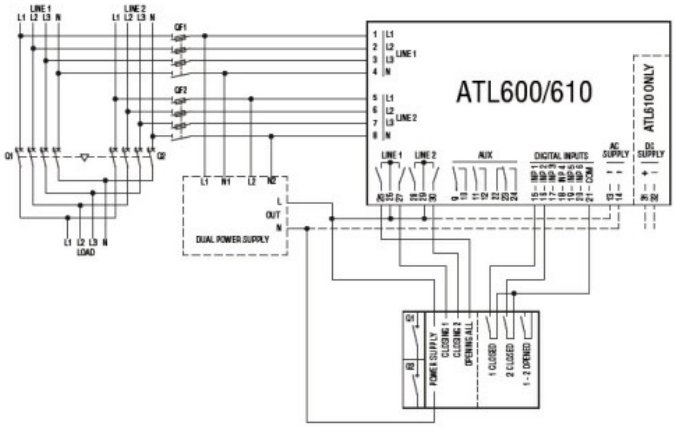

Certifications and compliance

Compliance

CSA C22.2 n°14
IEC/EN 60947-1
IEC/EN 60947-6-1
IEC/EN 61000-6-2
IEC/EN 61000-6-3
UL508

Certificates

cULus
EAC
RCM

ETIM classification

ETIM 8.0	EC000236 - PLC CPU-module

The characteristics described in this document are subject to updates or modifications at any time. The descriptions, technical and functional information, illustrations and instructions in this brochure are purely illustrative, and are consequently not contractually binding