Brand of NTN corporation

Technical data

UKF213H

Bearing units



Grey cast housing, radial insert ball bearing with adapter sleeve,seal with slinger

KIT CONTENT

UK213G2H, F213

VISUAL (S)

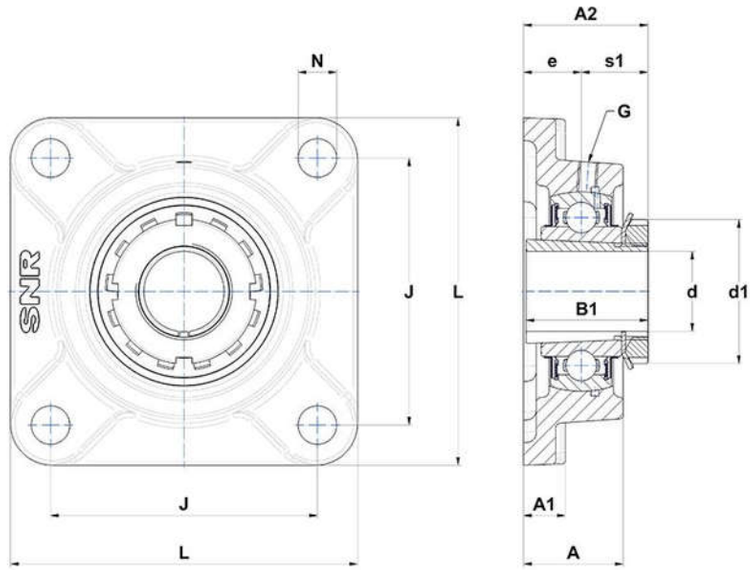

PRODUCT DEFINITION

Brand	SNR
A - Housing height	50 mm
A1 - Housing foot height / flange height	22 mm
A2 - Total height from mounting surface	62 mm
B - Width of Inner Ring	36 mm
B1 - Overall width Inner Ring	65 mm

PRODUCT DEFINITION	
d - Shaft diameter	60 mm
d1 - Outer dia of eccent. Lock. collar / nut of adapter sleeve	85 mm
e - Distance mounting surface to bearing center	30 mm
G - Grease fitting	M6x1
J - Mounting holes distance	149 mm
L - Housing width / diameter	187 mm
N - Mounting hole dimension	19 mm
s1 - Distance nut to middle of bearing raceway	32 mm

PRODUCT PERFORMANCE	
C - Dynamic load rating	57200000 mN
C0 - Static load rating	40000000 mN
Operating temperature min.	253,15 °K
Operating temperature max.	373,15 °K

OTHER FEATURES	
Mass	5,47 kg
Adapter sleeve designation	H2313