Product datasheet

Specifications



photo-electric sensor - XUX - BGS - Sn 2m - 24..240VAC/DC - terminals

XUX8ARCTT16

Main

Range of product	Telemecanique Photoelectric sensors XU
Series name	General purpose single mode
Electronic sensor type	Photo-electric sensor
Sensor name	XUX
Sensor design	Compact 92 x 71
Detection system	Diffuse with background suppression
Material	Plastic
Type of output signal	Discrete
Supply circuit type	AC/DC
Wiring technique	5-wire
Discrete output function	1 NO or 1 NC programmable
Electrical connection	Screw-clamp terminals, 1 x 0.75...1 x 1.5 mm²
Product specific application	Long sensing distance with high accuracy
Emission	Infrared
[Sn] nominal sensing distance	2 m

Complementary

Enclosure material	PC
Lens material	PMMA
Output type	Relay
Cable entry	ISO 16 cable gland, cable outer diameter: 7…10 mm
Status LED	Supply on: 1 LED (green) Instability: 1 LED (red) Output state: 1 LED (yellow)
[Us] rated supply voltage	24...240 V AC/DC
Supply voltage limits	20…264 V AC/DC
Switching frequency	20 Hz
Maximum voltage drop	<1.5 V (closed state)
Current consumption	35 mA no-load
Time delay range	0.02...15 s monostable, on delay or off-delay delay

Disclaimer: This documentation is not intended as a substitute for and is not to be used for determining suitability or reliability of these products for specific user applications

Maximum delay first up	200 ms
Maximum delay response	25 ms
Maximum delay recovery	25 ms
Electrical durability	500000 cycles, switching capacity: 0.5 A, cos f = 0.4 500000 cycles, switching capacity: 3 A, cos f = 1
Net weight	0.2 kg

Environment

Product certifications	CE CSA UL
Ambient air temperature for operation	-25…55 °C
Ambient air temperature for storage	-40…70 °C
Vibration resistance	7 gn (f = 10…55 Hz) conforming to IEC 60068-2-6
Shock resistance	10 gn (duration = 11 ms) conforming to IEC 60068-2-27
IP degree of protection	IP30 conforming to IEC 60529 (with cover open) IP65 conforming to IEC 60529 (double insulation) IP67 conforming to IEC 60529 (double insulation)

Packing Units

Unit Type of Package 1	PCE
Number of Units in Package 1	1
Package 1 Weight	207.0 g
Package 1 Height	4 cm
Package 1 width	9.5 cm
Package 1 Length	13 cm
Unit Type of Package 2	S02
Number of Units in Package 2	22
Package 2 Weight	4.813 kg
Package 2 Height	15 cm
Package 2 width	30 cm
Package 2 Length	40 cm

Offer Sustainability

Sustainable offer status	Green Premium product
REACh Regulation	REACh Declaration
EU RoHS Directive	Pro-active compliance (Product out of EU RoHS legal scope) EU RoHS Declaration
Mercury free	Yes
RoHS exemption information	Yes
Environmental Disclosure	Product Environmental Profile
Circularity Profile	End of Life Information

Contractual warranty

Warranty	18 months

Product datasheet XUX8ARCTT16

Dimensions Drawings

Dimensions

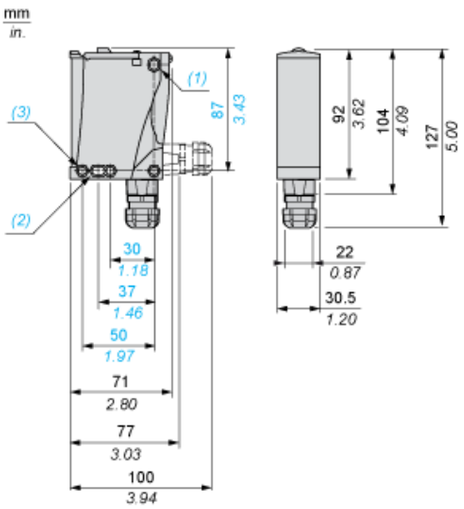

(1) Elongated hole Ø 5.5 x 7
(2) Elongated hole Ø 5.5 x 9
(3) Ø 5.5 hole

Wiring Schemes

Relay Output AC/DC

Terminals		
1		AC/DC
2		AC/DC
3		NO
4		Relay common
5		NC

Product datasheet XUX8ARCTT16

Performance Curves

Detection Curves

Variation of Usable Sensing Distance Su

Teach Mode at Minimum

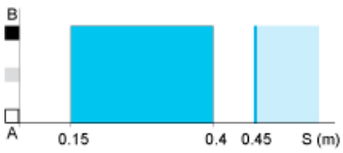

Teach Mode at Maximum

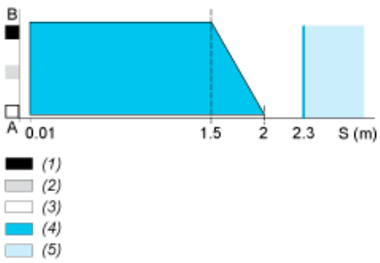

A-B : Object reflection coefficient
(1) Black 6%
(2) Grey 18%
(3) White 90%
(4) Sensing range
(5) Non sensing zone (matt surfaces)

Detection Curves

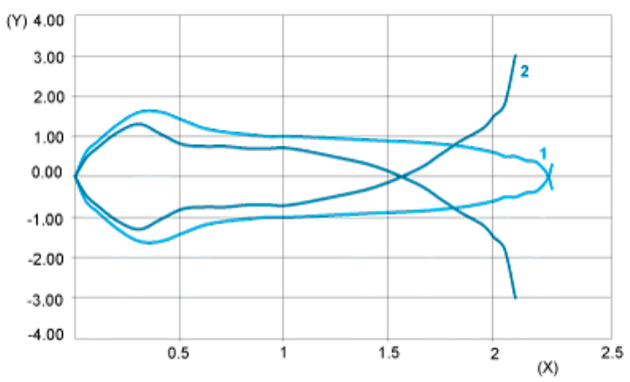

1 : White 90%
2 : Grey 18%
(Y) Detection lobe (cm)
(X) Object distance (m)

Object 10 x 10 cm

Relative Difference in Sensing Distances According to Object Colour

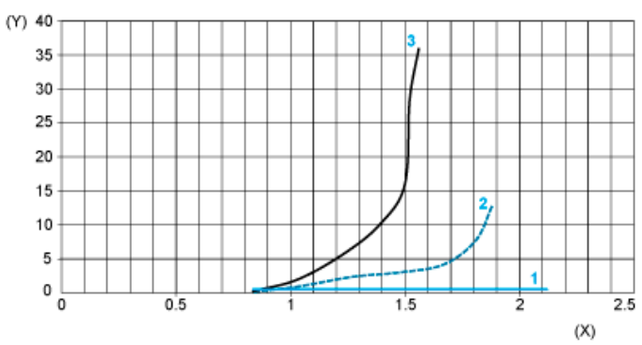

1 : White 90%
2 : Grey 18%
3 : Black 6%
(Y) Relative error (%)
(X) Object distance (m)

Object 10 x 10 cm