100 mA Adjustable Output, Positive Voltage Regulator

The LM317L is an adjustable 3–terminal positive voltage regulator capable of supplying in excess of 100 mA over an output voltage range of 1.2 V to 37 V. This voltage regulator is exceptionally easy to use and requires only two external resistors to set the output voltage. Further, it employs internal current limiting, thermal shutdown and safe area compensation, making them essentially blow–out proof.

The LM317L serves a wide variety of applications including local, on card regulation. This device can also be used to make a programmable output regulator, or by connecting a fixed resistor between the adjustment and output, the LM317L can be used as a precision current regulator.

- Output Current in Excess of 100 mA
- Output Adjustable Between 1.2 V and 37 V
- Internal Thermal Overload Protection
- Internal Short Circuit Current Limiting
- Output Transistor Safe–Area Compensation
- Floating Operation for High Voltage Applications
- Standard 3–Lead Transistor Package
- Eliminates Stocking Many Fixed Voltages

Simplified Application

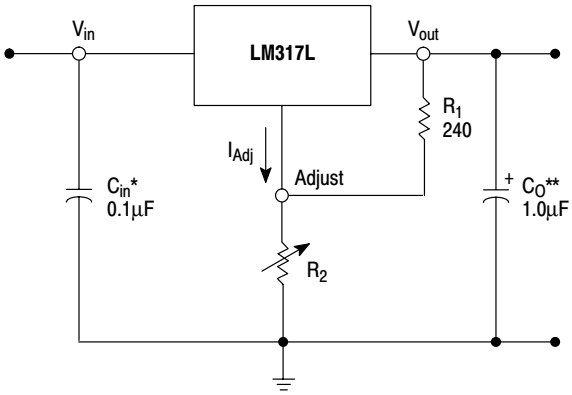

* C_{in} is required if regulator is located an appreciable distance from power supply filter.
** C_O is not needed for stability, however, it does improve transient response.

$$V_{out} = 1.25V\left(1 + \frac{R_2}{R_1}\right) + I_{Adj}R_2$$

Since I_{Adj} is controlled to less than 100 μA, the error associated with this term is negligible in most applications.

LM317L

LOW CURRENT THREE–TERMINAL ADJUSTABLE POSITIVE VOLTAGE REGULATOR

SEMICONDUCTOR TECHNICAL DATA

Z SUFFIX
PLASTIC PACKAGE
CASE 29

Pin 1. Adjust
2. V_{out}
3. V_{in}

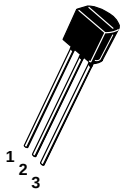

D SUFFIX
PLASTIC PACKAGE
CASE 751
(SOP–8*)

Pin 1. V_{in}
2. V_{out}
3. V_{out}
4. Adjust
5. N.C.
6. V_{out}
7. V_{out}
8. N.C.



*SOP–8 is an internally modified SO–8 package. Pins 2, 3, 6 and 7 are electrically common to the die attach flag. This internal lead frame modification decreases package thermal resistance and increases power dissipation capability when appropriately mounted on a printed circuit board. SOP–8 conforms to all external dimensions of the standard SO–8 package.

ORDERING INFORMATION

Device	Operating Temperature Range	Package
LM317LD	T_J = 0° to +125°C	SOP–8
LM317LZ		Plastic
LM317LBD	T_J = –40° to +125°C	SOP–8
LM317LBZ		Plastic

© Semiconductor Components Industries, LLC, 2002

MAXIMUM RATINGS

Rating	Symbol	Value	Unit
Input–Output Voltage Differential	$V_I–V_O$	40	Vdc
Power Dissipation	P_D	Internally Limited	W
Operating Junction Temperature Range	T_J	–40 to +125	°C
Storage Temperature Range	T_{stg}	–65 to +150	°C

ELECTRICAL CHARACTERISTICS ($V_I–V_O$ = 5.0 V; I_O = 40 mA; $T_J = T_{low}$ to T_{high} [Note 1]; I_{max} and P_{max} [Note 2]; unless otherwise noted.)

Characteristics	Figure	Symbol	LM317L, LB			Unit
			Min	Typ	Max	
Line Regulation (Note 3) T_A = 25°C, 3.0 V ≤ $V_I – V_O$ ≤ 40 V	1	Reg_{line}	–	0.01	0.04	%/V
Load Regulation (Note 3), T_A = 25°C 10 mA ≤ I_O ≤ I_{max} – LM317L V_O ≤ 5.0 V V_O ≥ 5.0 V	2	Reg_{load}	 – –	 5.0 0.1	 25 0.5	 mV % V_O
Adjustment Pin Current	3	I_{Adj}	–	50	100	μA
Adjustment Pin Current Change 2.5 V ≤ $V_I – V_O$ ≤ 40 V, P_D ≤ P_{max} 10 mA ≤ I_O ≤ I_{max} – LM317L	1, 2	ΔI_{Adj}	–	0.2	5.0	μA
Reference Voltage 3.0 V ≤ $V_I – V_O$ ≤ 40 V, P_D ≤ P_{max} 10 mA ≤ I_O ≤ I_{max} – LM317L	3	V_{ref}	1.20	1.25	1.30	V
Line Regulation (Note 3) 3.0 V ≤ $V_I – V_O$ ≤ 40 V	1	Reg_{line}	–	0.02	0.07	%/V
Load Regulation (Note 3) 10 mA ≤ I_O ≤ I_{max} – LM317L V_O ≤ 5.0 V V_O ≥ 5.0 V	2	Reg_{load}	 – –	 20 0.3	 70 1.5	 mV % V_O
Temperature Stability (T_{low} ≤ T_J ≤ T_{high})	3	T_S	–	0.7	–	% V_O
Minimum Load Current to Maintain Regulation ($V_I – V_O$ = 40 V)	3	I_{Lmin}	–	3.5	10	mA
Maximum Output Current $V_I – V_O$ ≤ 6.25 V, P_D ≤ P_{max}, Z Package $V_I – V_O$ ≤ 40 V, P_D ≤ P_{max}, T_A = 25°C, Z Package	3	I_{max}	 100 –	 200 20	 – –	mA
RMS Noise, % of V_O T_A = 25°C, 10 Hz ≤ f ≤ 10 kHz		N	–	0.003	–	% V_O
Ripple Rejection (Note 4) V_O = 1.2 V, f = 120 Hz C_{Adj} = 10 μF, V_O = 10.0 V	4	RR	 60 –	 80 80	 – –	dB
Long Term Stability, $T_J = T_{high}$ (Note 5) T_A = 25°C for Endpoint Measurements	3	S	–	0.3	1.0	%/1.0 k Hrs.
Thermal Resistance, Junction–to–Case Z Package		$R_{\theta JC}$	–	83	–	°C/W
Thermal Resistance, Junction–to–Air Z Package		$R_{\theta JA}$	–	160	–	°C/W

NOTES: 1. T_{low} to T_{high} = 0° to +125°C for LM317L –40° to +125°C for LM317LB
2. I_{max} = 100 mA P_{max} = 625 mW
3. Load and line regulation are specified at constant junction temperature. Changes in V_O due to heating effects must be taken into account separately. Pulse testing with low duty cycle is used.
4. C_{Adj}, when used, is connected between the adjustment pin and ground.
5. Since Long–Term Stability cannot be measured on each device before shipment, this specification is an engineering estimate of average stability from lot to lot.

Representative Schematic Diagram

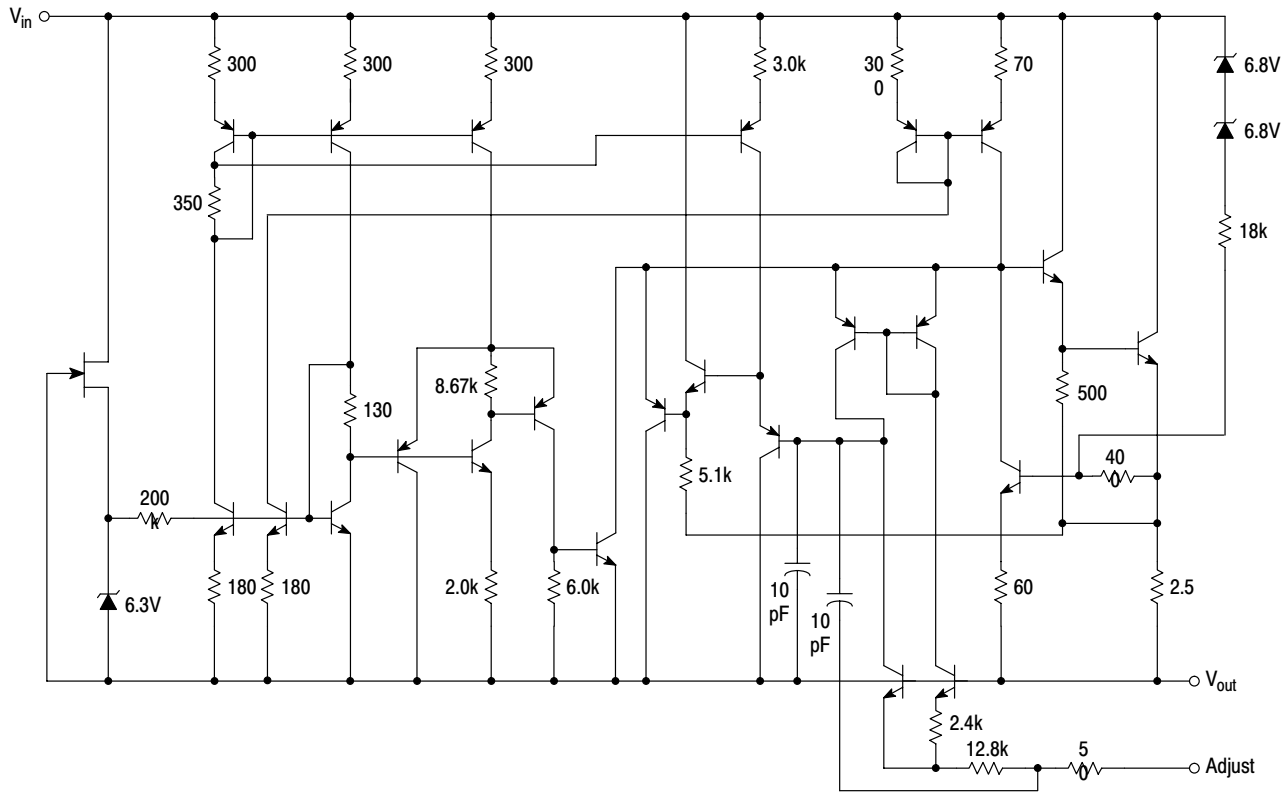

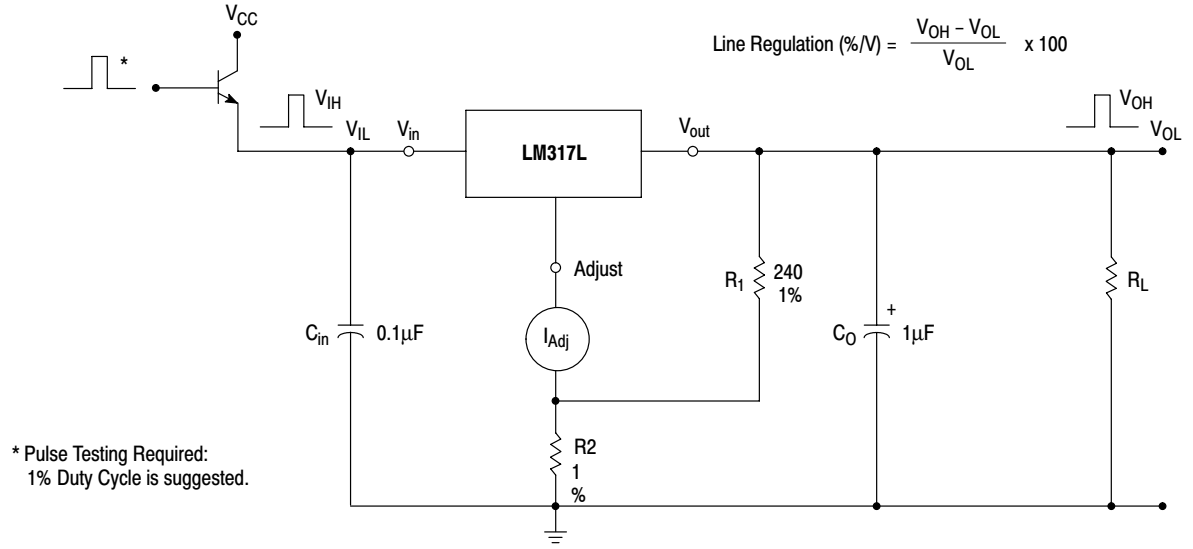

Figure 1. Line Regulation and ΔI_{Adj}/Line Test Circuit

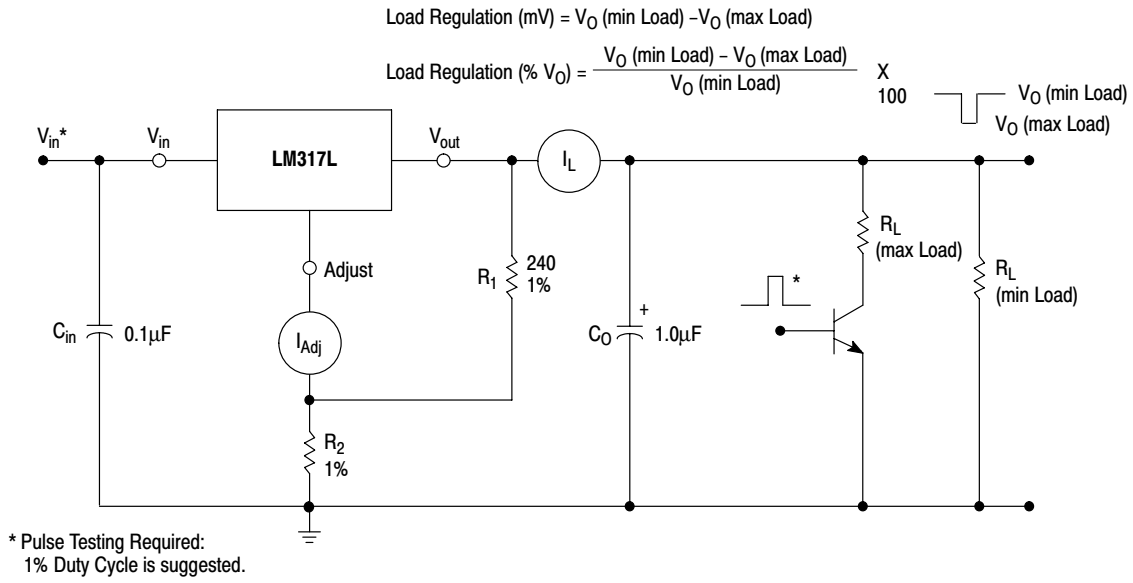

Figure 2. Load Regulation and ΔI_{Adj}/Load Test Circuit

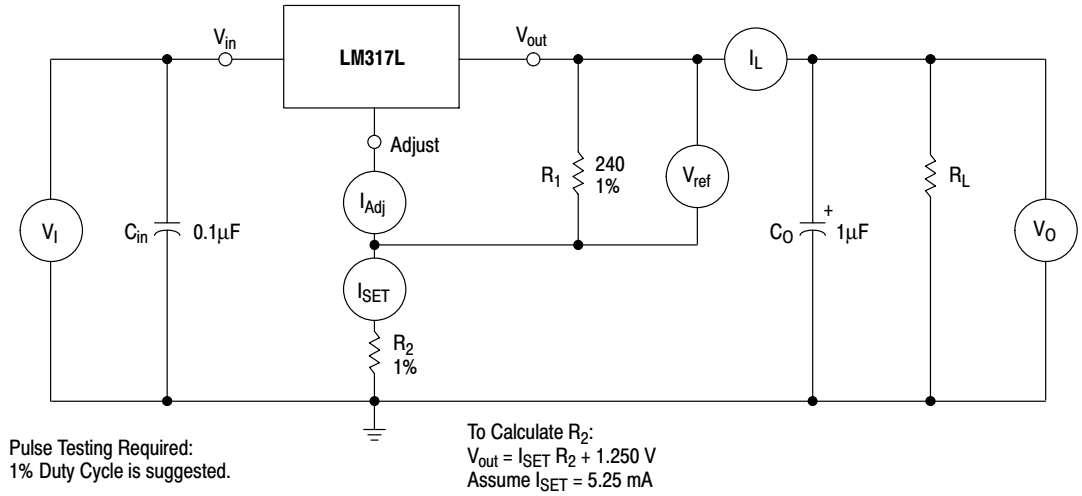

Figure 3. Standard Test Circuit

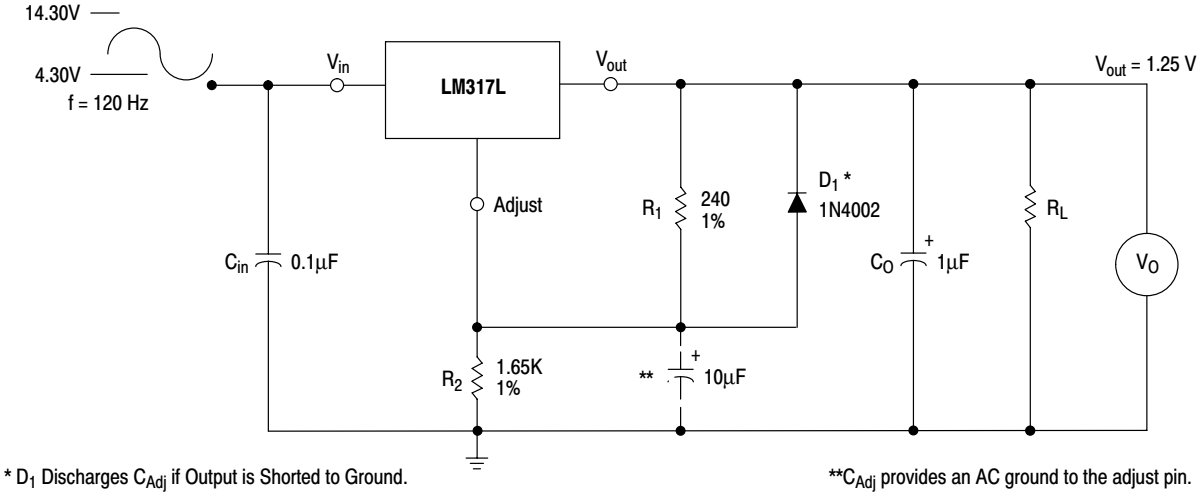

Figure 4. Ripple Rejection Test Circuit

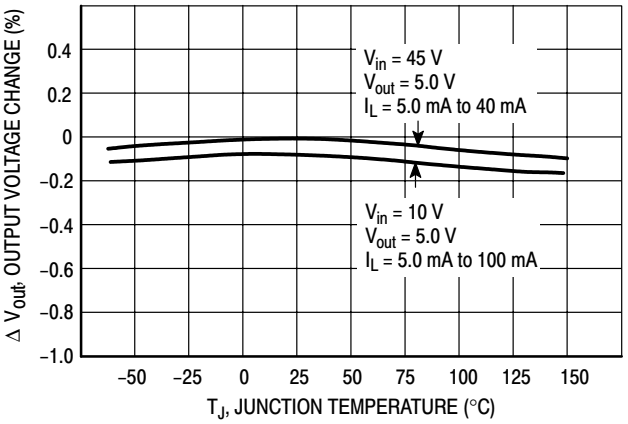

Figure 5. Load Regulation

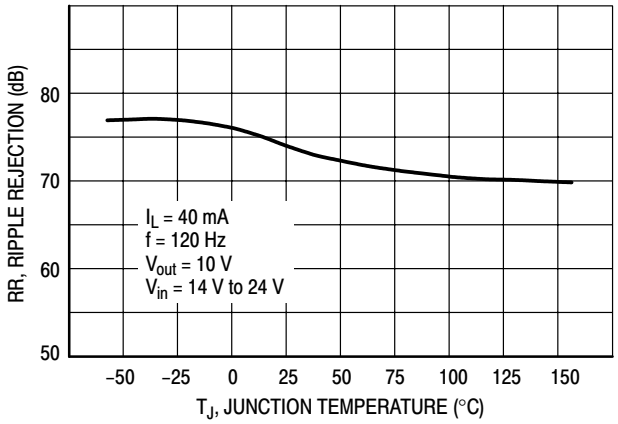

Figure 6. Ripple Rejection

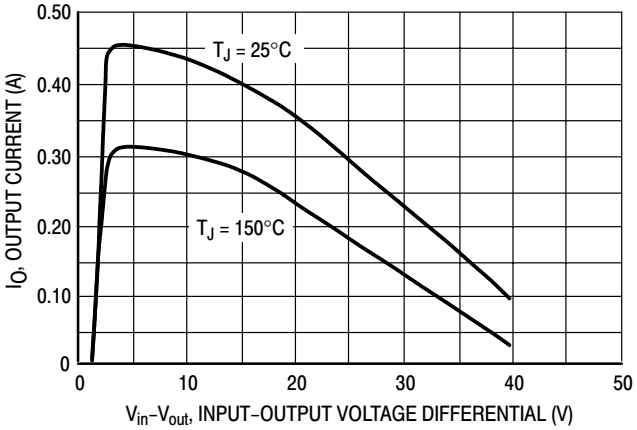

Figure 7. Current Limit

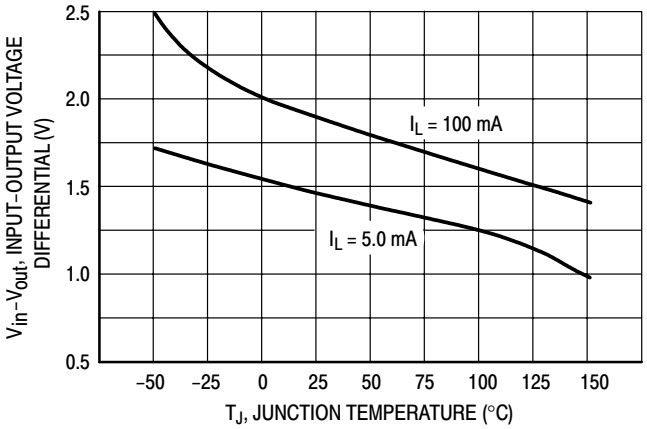

Figure 8. Dropout Voltage

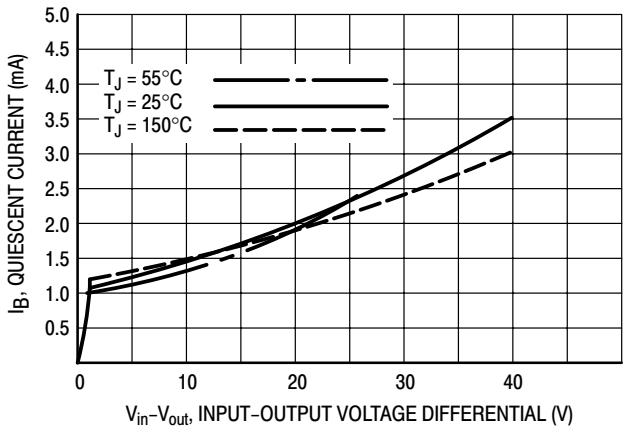

Figure 9. Minimum Operating Current

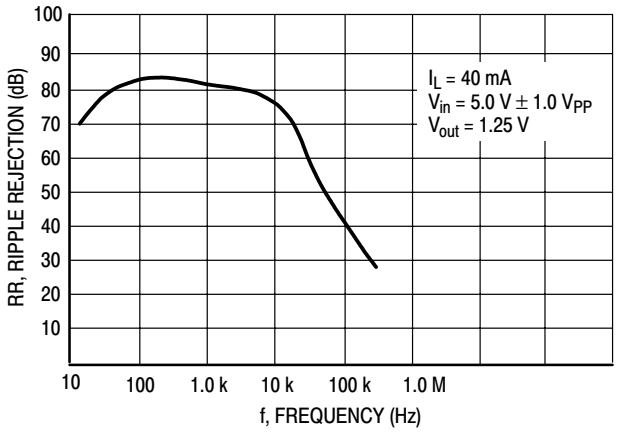

Figure 10. Ripple Rejection versus Frequency

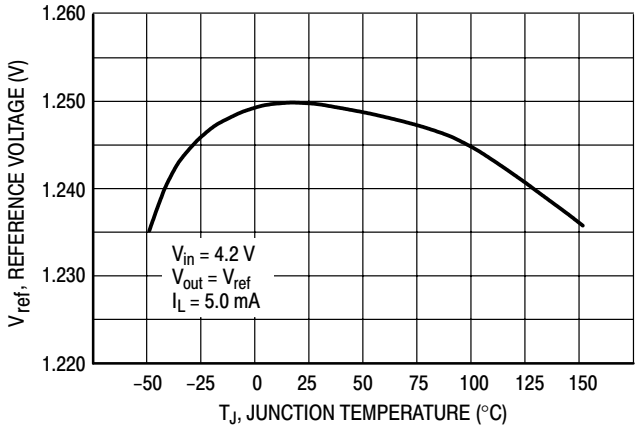

Figure 11. Temperature Stability

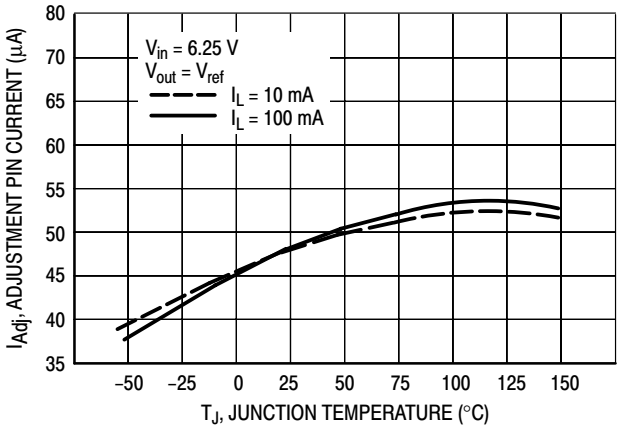

Figure 12. Adjustment Pin Current

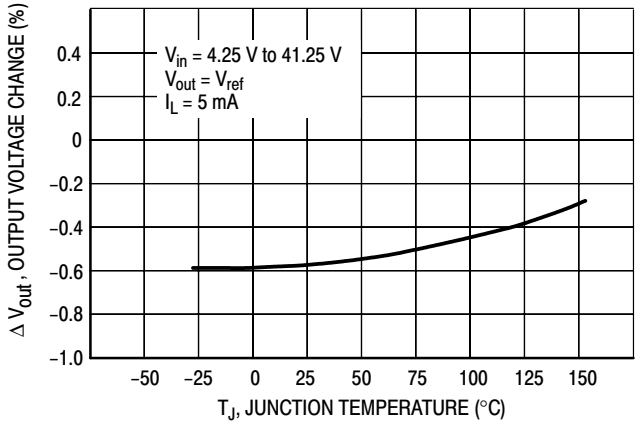

Figure 13. Line Regulation

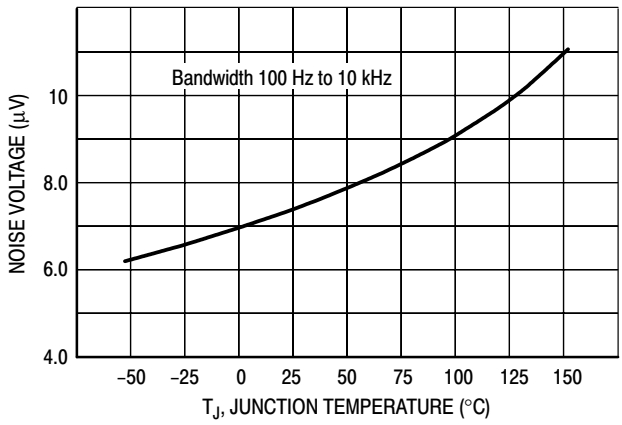

Figure 14. Output Noise

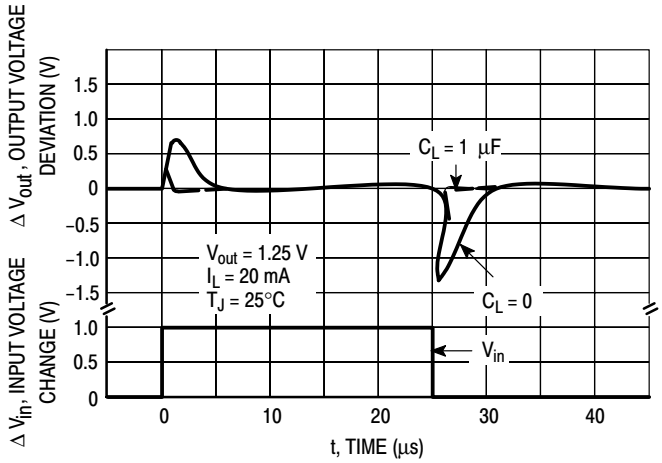

Figure 15. Line Transient Response

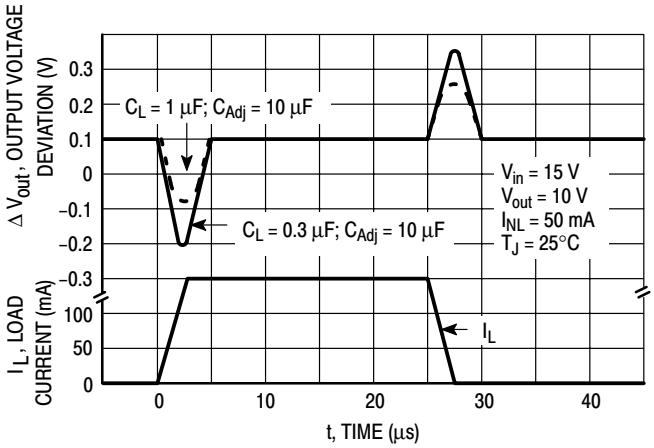

Figure 16. Load Transient Response

APPLICATIONS INFORMATION

Basic Circuit Operation

The LM317L is a 3–terminal floating regulator. In operation, the LM317L develops and maintains a nominal 1.25 V reference (V_{ref}) between its output and adjustment terminals. This reference voltage is converted to a programming current (I_{PROG}) by R_1 (see Figure 13), and this constant current flows through R_2 to ground. The regulated output voltage is given by:

$$V_{out} = V_{ref} (1 + \frac{R_2}{R_1}) + I_{Adj} R_2$$

Since the current from the adjustment terminal (I_{Adj}) represents an error term in the equation, the LM317L was designed to control I_{Adj} to less than 100 μA and keep it constant. To do this, all quiescent operating current is returned to the output terminal. This imposes the requirement for a minimum load current. If the load current is less than this minimum, the output voltage will rise.

Since the LM317L is a floating regulator, it is only the voltage differential across the circuit which is important to performance, and operation at high voltages with respect to ground is possible.

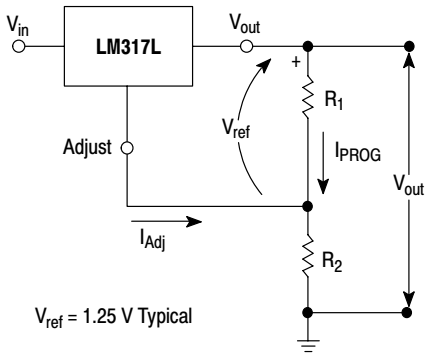

Figure 17. Basic Circuit Configuration

Load Regulation

The LM317L is capable of providing extremely good load regulation, but a few precautions are needed to obtain maximum performance. For best performance, the programming resistor (R1) should be connected as close to the regulator as possible to minimize line drops which effectively appear in series with the reference, thereby degrading regulation. The ground end of R2 can be returned near the load ground to provide remote ground sensing and improve load regulation.

External Capacitors

A 0.1 μF disc or 1.0 μF tantalum input bypass capacitor (C_{in}) is recommended to reduce the sensitivity to input line impedance.

The adjustment terminal may be bypassed to ground to improve ripple rejection. This capacitor (C_{Adj}) prevents ripple from being amplified as the output voltage is increased. A 10 μF capacitor should improve ripple rejection about 15 dB at 120 Hz in a 10 V application.

Although the LM317L is stable with no output capacitance, like any feedback circuit, certain values of external capacitance can cause excessive ringing. An output capacitance (C_O) in the form of a 1.0 μF tantalum or 25 μF aluminum electrolytic capacitor on the output swamps this effect and insures stability.

Protection Diodes

When external capacitors are used with any IC regulator it is sometimes necessary to add protection diodes to prevent the capacitors from discharging through low current points into the regulator.

Figure 14 shows the LM317L with the recommended protection diodes for output voltages in excess of 25 V or high capacitance values (C_O > 10 μF, C_{Adj} > 5.0 μF). Diode D_1 prevents C_O from discharging thru the IC during an input short circuit. Diode D_2 protects against capacitor C_{Adj} discharging through the IC during an output short circuit. The combination of diodes D_1 and D_2 prevents C_{Adj} from discharging through the IC during an input short circuit.

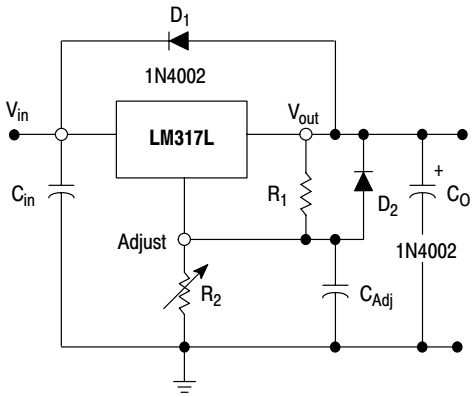

Figure 18. Voltage Regulator with Protection Diodes

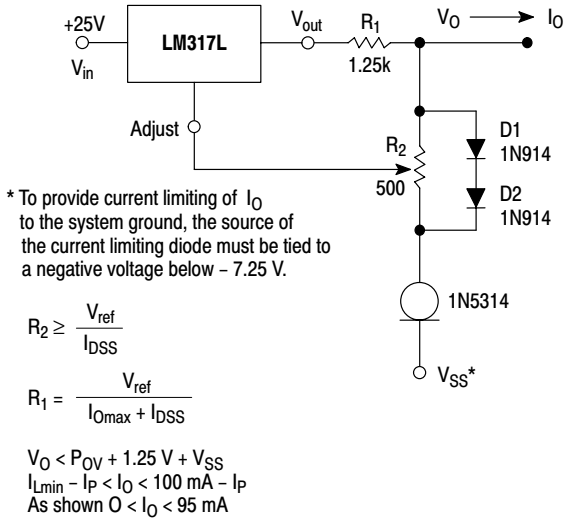

Figure 19. Adjustable Current Limiter

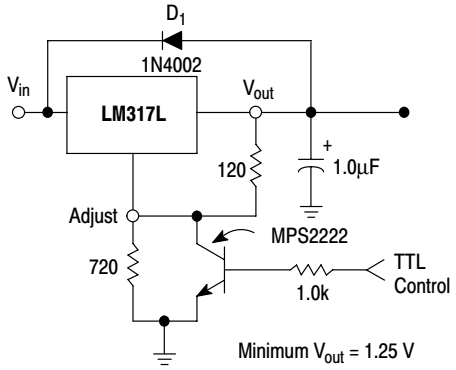

D_1 protects the device during an input short circuit.

Figure 20. 5 V Electronic Shutdown Regulator

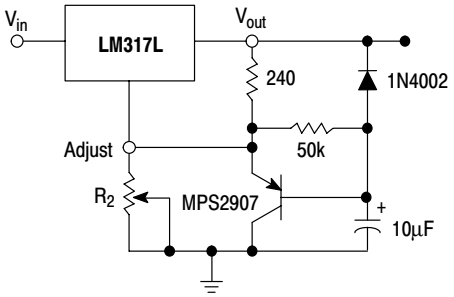

Figure 21. Slow Turn–On Regulator

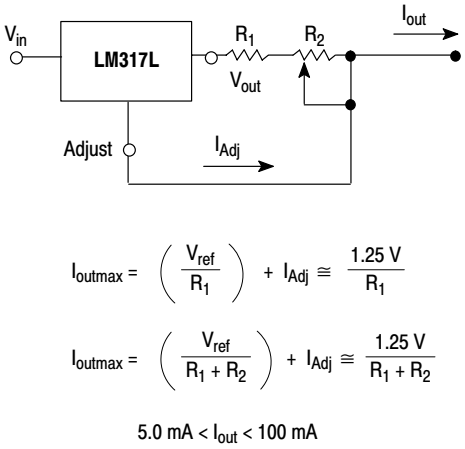

Figure 22. Current Regulator

PACKAGE DIMENSIONS

Z SUFFIX
PLASTIC PACKAGE
CASE 29–11
ISSUE AL

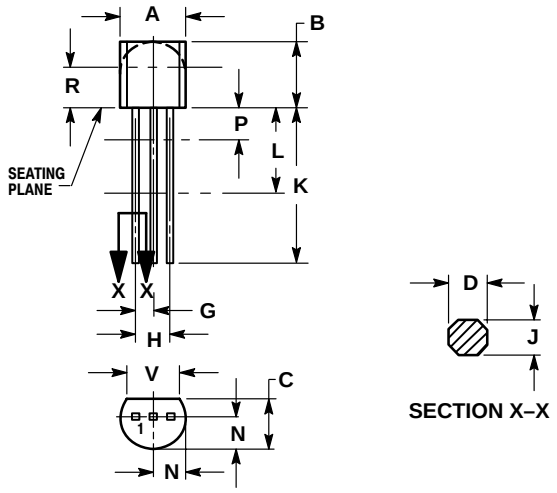

NOTES:
1. DIMENSIONING AND TOLERANCING PER ANSI Y14.5M, 1982.
2. CONTROLLING DIMENSION: INCH.
3. CONTOUR OF PACKAGE BEYOND DIMENSION R IS UNCONTROLLED.
4. LEAD DIMENSION IS UNCONTROLLED IN P AND BEYOND DIMENSION K MINIMUM.

	INCHES		MILLIMETERS	
DIM	MIN	MAX	MIN	MAX
A	0.175	0.205	4.45	5.20
B	0.170	0.210	4.32	5.33
C	0.125	0.165	3.18	4.19
D	0.016	0.021	0.407	0.533
G	0.045	0.055	1.15	1.39
H	0.095	0.105	2.42	2.66
J	0.015	0.020	0.39	0.50
K	0.500	---	12.70	---
L	0.250	---	6.35	---
N	0.080	0.105	2.04	2.66
P	---	0.100	---	2.54
R	0.115	---	2.93	---
V	0.135	---	3.43	---

D SUFFIX
PLASTIC PACKAGE
CASE 751–07
(SOP–8)
ISSUE W

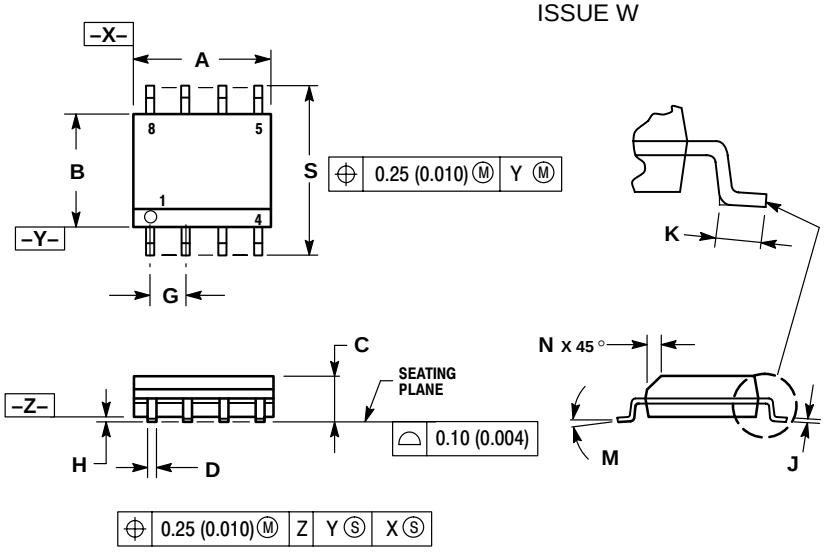

NOTES:
1. DIMENSIONING AND TOLERANCING PER ANSI Y14.5M, 1982.
2. CONTROLLING DIMENSION: MILLIMETER.
3. DIMENSION A AND B DO NOT INCLUDE MOLD PROTRUSION.
4. MAXIMUM MOLD PROTRUSION 0.15 (0.006) PER SIDE.
5. DIMENSION D DOES NOT INCLUDE DAMBAR PROTRUSION. ALLOWABLE DAMBAR PROTRUSION SHALL BE 0.127 (0.005) TOTAL IN EXCESS OF THE D DIMENSION AT MAXIMUM MATERIAL CONDITION.

	MILLIMETERS		INCHES	
DIM	MIN	MAX	MIN	MAX
A	4.80	5.00	0.189	0.197
B	3.80	4.00	0.150	0.157
C	1.35	1.75	0.053	0.069
D	0.33	0.51	0.013	0.020
G	1.27 BSC		0.050 BSC	
H	0.10	0.25	0.004	0.010
J	0.19	0.25	0.007	0.010
K	0.40	1.27	0.016	0.050
M	0 °	8 °	0 °	8 °
N	0.25	0.50	0.010	0.020
S	5.80	6.20	0.228	0.244

Notes

Notes

ON Semiconductor and  are trademarks of Semiconductor Components Industries, LLC (SCILLC). SCILLC reserves the right to make changes without further notice to any products herein. SCILLC makes no warranty, representation or guarantee regarding the suitability of its products for any particular purpose, nor does SCILLC assume any liability arising out of the application or use of any product or circuit, and specifically disclaims any and all liability, including without limitation special, consequential or incidental damages. "Typical" parameters which may be provided in SCILLC data sheets and/or specifications can and do vary in different applications and actual performance may vary over time. All operating parameters, including "Typicals" must be validated for each customer application by customer's technical experts. SCILLC does not convey any license under its patent rights nor the rights of others. SCILLC products are not designed, intended, or authorized for use as components in systems intended for surgical implant into the body, or other applications intended to support or sustain life, or for any other application in which the failure of the SCILLC product could create a situation where personal injury or death may occur. Should Buyer purchase or use SCILLC products for any such unintended or unauthorized application, Buyer shall indemnify and hold SCILLC and its officers, employees, subsidiaries, affiliates, and distributors harmless against all claims, costs, damages, and expenses, and reasonable attorney fees arising out of, directly or indirectly, any claim of personal injury or death associated with such unintended or unauthorized use, even if such claim alleges that SCILLC was negligent regarding the design or manufacture of the part. SCILLC is an Equal Opportunity/Affirmative Action Employer.

PUBLICATION ORDERING INFORMATION

Literature Fulfillment:
Literature Distribution Center for ON Semiconductor
P.O. Box 5163, Denver, Colorado 80217 USA
Phone: 303–675–2175 or 800–344–3860 Toll Free USA/Canada
Fax: 303–675–2176 or 800–344–3867 Toll Free USA/Canada
Email: ONlit@hibbertco.com

N. American Technical Support: 800–282–9855 Toll Free USA/Canada

JAPAN: ON Semiconductor, Japan Customer Focus Center
4–32–1 Nishi–Gotanda, Shinagawa–ku, Tokyo, Japan 141–0031
Phone: 81–3–5740–2700
Email: r14525@onsemi.com

ON Semiconductor Website: http://onsemi.com

For additional information, please contact your local
Sales Representative.