Brand of NTN corporation

Technical data

5207EEG15

Double row angular contact ball bearings

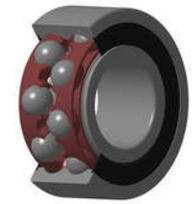

VISUAL (S)

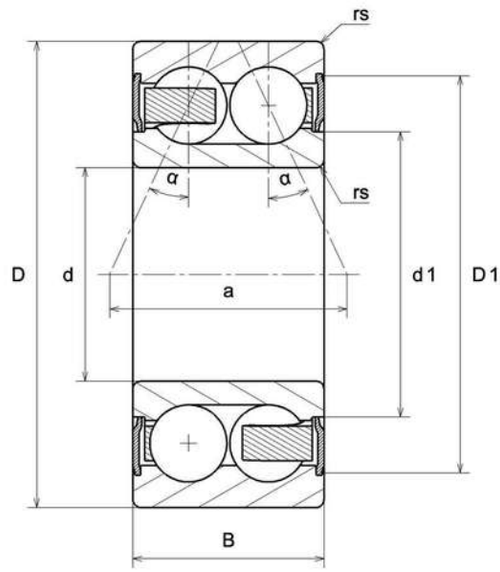

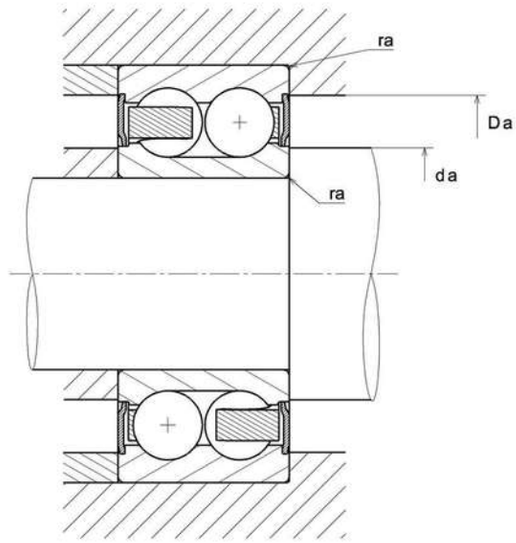

5207EEG15
Double row angular contact ball bearings

PRODUCT DEFINITION	
Brand	SNR
d - Internal diameter	35 mm
D - External diameter	72 mm
B - Bearing/Inner ring width	27 mm
d1 - External diameter inner ring	45 mm
D1 - Inner diameter outer ring	64,3 mm
a - Charge load application point	36,5 mm
- Contact angle	25 °
rs - Min fillet radius	1,1 mm
Radial clearance class	CN
Precision class	P0
Mass	0,43 kg

PRODUCT PERFORMANCE	
C - Dynamic load	37,3 kN
C0 - Static load	28,7 kN
Cu - Fatigue limit load	1,77 kN
f0 - Coefficient	14.2
Nlim - Mechanical Limit Speed	6100 tr/min
Tmin - Min operating temperature	-20 °C
Tmax - Max operating temperature	120 °C

BEARING FREQUENCIES	
BPFO - Characteristic outer ring frequency (60 rpm)	3.653 Hz
BPFI - Characteristic inner ring frequency (60 rpm)	5.347 Hz

BEARING FREQUENCIES	
FTF - Characteristic cage frequency (60 rpm)	0.406 Hz
BSF - Characteristic rolling element frequency (60 rpm)	4.644 Hz

ABUTMENT	
da min - Min shoulder diameter IR	41,5 mm
da max - Max shoulder diameter IR	45 mm
Da max - Max shoulder diameter OR	65,5 mm
ra max - Max shaft & housing fillet radius	1 mm