SLOW-START/QUICK EXHAUST VALVE

- High exhaust capacity for quick depletion of downstream pressure
- Slow Starts provide gradual increase of downstream pressure and full flow once 70% of inlet pressure is reached
- This product allows for machines and installations to conform to the European Directives
- Optional low profile integrated gauge, round gauge, digital gauge or digital pressure switch
- Constructions includes: 3/2 Quick Exhaust, 3/2 Slow-Start/Quick-Exhaust, and 2/2 Slow Start
- Electrical connections: Coil with DIN terminals; DIN Plug, DIN Plug with LED, and coil with built-in M12 3 Pin male connection (24 VDC)

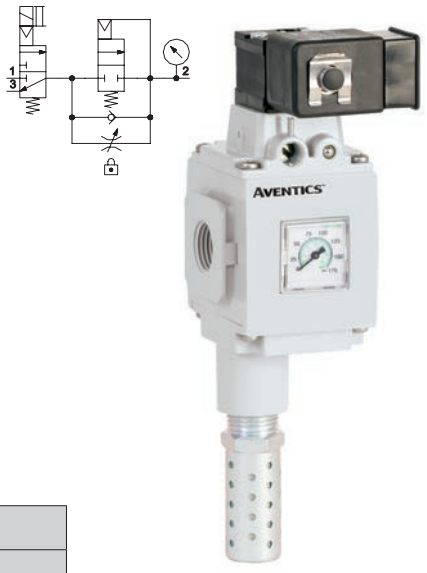

Performance Data

Series		651		652		653	
Port sizes		1/8, 1/4		1/4, 3/8, 1/2		3/4, 1	
Thread type		G (NPTF in option)					
Nominal flow - ISO 6358 P1 = 6.3 bar ΔP = 1 bar		l/min (ANR)					
		1 → 2	2 → 3	1 → 2	2 → 3	1 → 2	2 → 3
	1/8	780	1040	-	-	-	-
	1/4	1000	1120	1500	2100	-	-
	3/8	-	-	3750	4300	-	-
	1/2	-	-	4650	5000	-	-
	3/4	-	-	-	-	7280	8890
	1	-	-	-	-	8230	8960
Minimum operating pressure (bar)		3.8 *					
Maximum operating pressure (bar)		10				16**	
Ambient temperature range (°C)		-10 to +50					
Fluid temperature range (°C)		-10 to +50					
Fluid		air or inert gas					
Weight (kg)		0.387		0.438		1.592	

*If P(1) supply flow is restricted on valves with internal pilot supply, momentary exhaust leakage can occur.
** Pressure rating is 10 bar when equipped with a digital gauge or digital pressure switch.

Materials in Contact with Fluid	
Body	Aluminium
Seals	NBR/FKM
Springs	Stainless steel

Operating Data				
	24/DC	115/50	230/50	24/50
Power	—	9 VA	9 VA	9 VA
Holding	3.0 Watts	4 VA (3.0 Watts)		

System Pressurization and Depressurization Curves

(with Automatic Soft Start Device)

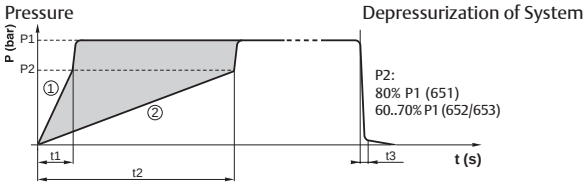

The adjustment range for the pressurization time lies between curves (1) and (2).

The transition to full flow takes place automatically as soon as the downstream pressure reaches 80% (651)/60% to 70% (652/653) of the upstream pressure.

Filling and venting times (seconds)			
	Series 651	Series 652	Series 653
t1 (with screw loosened by 6 (651)/7 (652)/8 (653) turns)	8.0	3.2	2.8
t2 (with screw loosened by 1 turn)	112.0	23.0	18.5
t3 (venting time)	4.8	1.0	0.5

These times correspond to a supply pressure (P1) of 6.3 bar, a transition pressure (P2) of 80% (651)/60% to 70% (652/653) P1 (not adjustable) and a downstream capacity of 10 liters.

01809GB-2020/R01
Availability, design and specifications are subject to change without notice. All rights reserved.

How to Order - Slow Start/Quick Exhaust Valve

G 651 A 6 S 6 2 G A00 F1

Configurator - CAD Files

Thread connection
G = ISO 228/1-G (1)
8 = NPTF

Product series
651
652
653

Revision letter
A

Product type
4 = 2/2 - Slow start
5 = 3/2 - Quick exhaust
6 = 3/2 - Slow start/Quick exhaust

Valve type
E = External air pilot
P = Internal air pilot
(Available on 2/2 Slow Start only)
S = Solenoid air pilot

Pilot valve/Electrical connection
0 = No Electrical Connection
1 = Vertical Solenoid Pilot, without DIN Connector (must order with option 110)
2 = Vertical Solenoid Pilot, DIN Connector with LED (must order with option 110)
3 = Vertical Solenoid Pilot, DIN Connector w/o LED (must order with option 110)
4 = Vertical Solenoid Pilot, 3 Pin M12 Connection (2) (must order with option 110)
5 = Horizontal Solenoid Pilot, without DIN Connector
6 = Horizontal Solenoid Pilot, DIN Connector with LED
7 = Horizontal Solenoid Pilot, DIN Connector without LED
8 = Horizontal Solenoid Pilot with 3 Pin M12 Connection (2)
9 = Without pilot operator

Port size
1 = 1/8 (Series 651)
2 = 1/4 (Series 651 or 652)
3 = 3/8 (Series 652)
4 = 1/2 (Series 652)
5 = 3/4 (Series 653)
6 = 1 (Series 653)

Voltage
EW = 115 50/60 VAC
F1 = 24 VDC
FQ = 24 50/60 VAC
FH = 230 50/60 VAC (651 or 652)
F8 = 230/50 VAC (653 only)
DE = 230/60 VAC (653 only)
00 = No voltage

Options (3)
A00 = No option
101 = Side Mounting Brackets
109 = FPM seals
110 = Without manual operator
111 = Metal Muffler
113 = Stainless steel fasteners
117 = ATEX zones 1/21 (4)
122 = Inverted Mounting
123 = Gauge type mounted for right-to-left flow
124 = CUTR Certification (EAC)
125 = CUTR Ex
201 = 110 + 111

101



123



Gauge type
B = Digital pressure switch - PNP
C = Digital pressure switch - NPN
D = Digital gauge
G = Low profile integrated gauge bar/PSI
J = Low profile integrated gauge bar/PSI with pressure range indicators
Q = Round gauge bar/PSI
0 = No gauge port
P = Port Plate Rc 1/8

B/C D G J

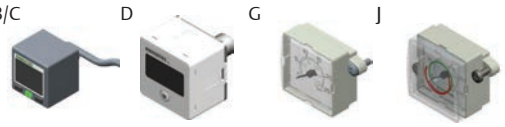

P Q 0



(1) Conforms to ISO standards 1179-1.
(2) Available for DC voltage only.
(3) If multiple options are required, please use the on-line CAD configurator on the website to generate the part number (www.emerson.com).
(4) Option 117 (ATEX 1-21) is available with Valve Type "E" or "P". For Valve Type "S" (Solenoid Pilot), please select "9" under the "Pilot Valve/Electrical Connection. Contact us for further information.

01809GB-2020/R01
Availability, design and specifications are subject to change without notice. All rights reserved.

Dimensions : mm - Series 651/652/653 Slow-Start/Quick Exhaust Valve

Configurator - CAD Files

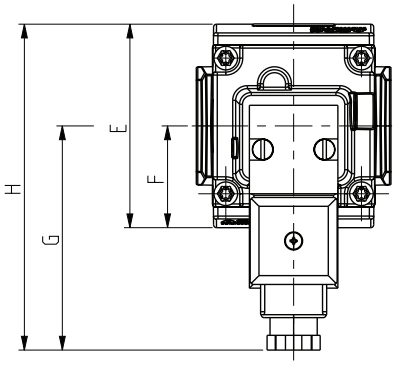

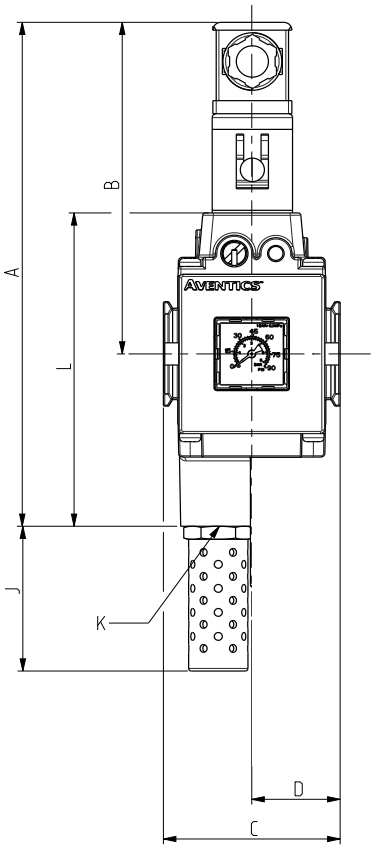

Cross Section - Series 651/652/653 Slow Start/Quick Exhaust Valve

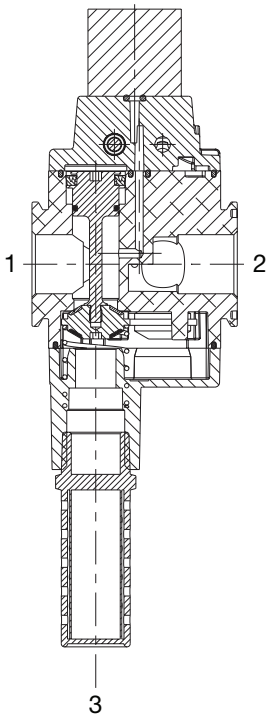

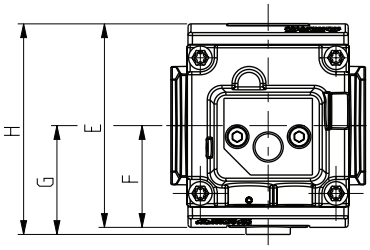

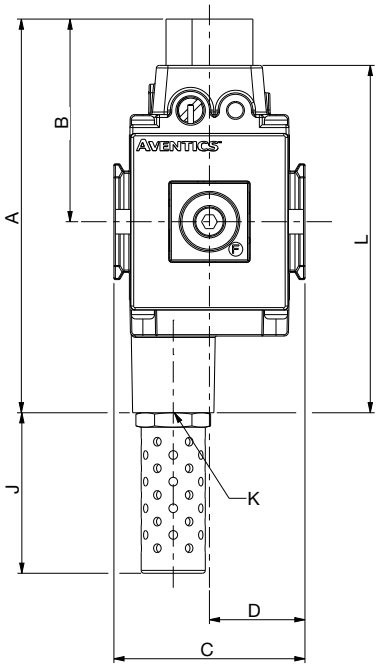

External Air Pilot

	A	B	C	D	E	F	G	H	J	K	L
651	113	59	50	25	58	29	31.5	60.5	34.5	G1/4	97
652	136	70	66	33	69	34.5	37	71.5	57	G1/2	120
653	158	81	90	45	93.1	46.5	48.4	95	81.2	G1	142

Solenoid Pilot

	A	B	C	D	E	F	G	H	J	K	L
651	170	116	50	25	58	29	72	101	34.5	G1/4	97
652	193	127	66	33	69	34.5	72	106.5	57	G1/2	120
653	214	137	90	45	93.1	46.5	94	140.5	81.2	G1	142

01809GB-2020/R01
Availability, design and specifications are subject to change without notice. All rights reserved.