87045 LIMOGES Cedex
Téléphone : 05 55 06 87 87 – Télécopie : 05 55 06 88 88

DX³ MCB 6000 A / 10 kA
3P and 4P up to 32 A

Cat. N°(s): 4 078 36 to 4 078 41, 4 079 05 to 4 079 10, 4 079 25, 4 080 66 to 4 080 71, 4 081 24 to 4 081 29

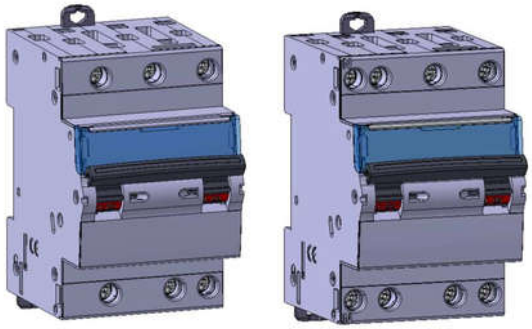

SOMMAIRE PAGES

1. Description, utilisation 1
2. Gamme 1
3. Cotes d'encombrement 1
4. Mise en situation - Raccordement 1
5. Caractéristiques générales.....3
6. Conformités et Agréments.....28
7. Courbes 29
8. Equipements et accessoires.....35

1. DESCRIPTION - USAGE

Thermal-magnetic circuit breaker (MCB) with positive contact indication for control, protection against short-circuits and overloads, and isolation of electrical circuits.

Symbol:



Technology:
. Limiting device
. Simultaneous control of all poles for closing and opening (trip-free mechanism)

2. RANGE

Polarity:
. 3P (3 protected poles)
. 4P (4 protected poles)

Width:
. 3 modules (3 x 17.8 mm)

Rated currents In:
. 6 / 10 / 13 / 16 / 20 / 25 / 32A, C curve
. 6 / 10 / 16 / 20 / 25 / 32A, D curve

Magnetic tripping curves:
. C curve (between 5 and 10 In)
. D curve (between 10 and 14 In)

Rated voltage and frequency:
. 400 V ~, 50 Hz with standard tolerances
. 415 V ~, 50 Hz with standard tolerances

Breaking capacity:
. Icn = 6000 A in accordance with standard EN/IEC 60898-1
. Icu = 10 kA in accordance with standard EN/IEC 60947-2

3. OVERALL DIMENSIONS

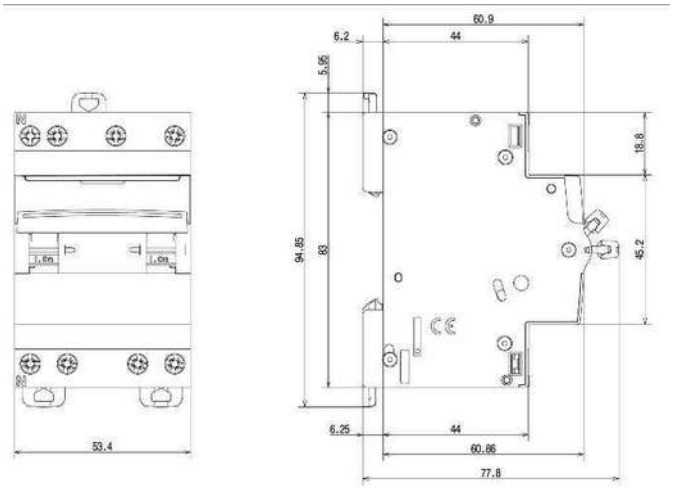

4. PREPARATION - CONNECTION

Mounting:
. On symmetrical EN 60.715 rail or DIN 35 rail

Operating position:
.Vertical Horizontal Upside down On the side

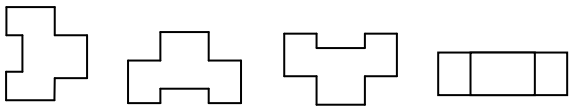

Power supply:
. Either from the top or the bottom

4. PREPARATION - CONNECTION *(continued)*

Module maintenance:

. A circuit breaker may be replaced in the middle of a row supplied with busbars without disconnecting the other products.

Put the clamp in the unlocking position

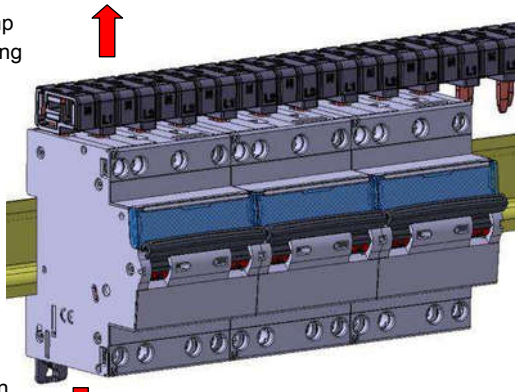

Put the clamp in the unlocking position

Unscrew both upper terminals completely

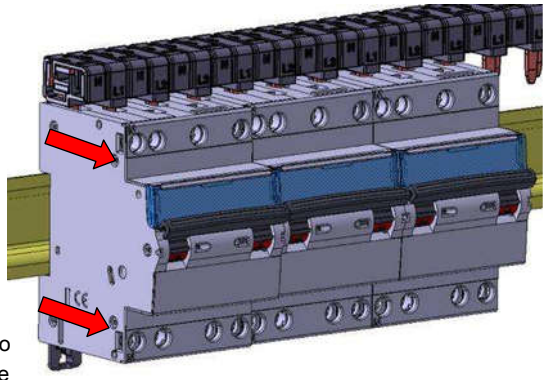

Pull the device forward in order to release it from the rail

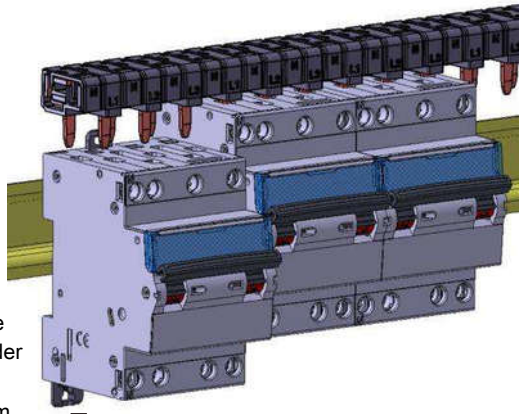

Pull the device downward in order to release it completely from the prongs of the busbar

Connection:

. Terminals protected against direct contact IP20, wired device
. Cage terminals, with release and captive screws
. Terminals fitted with shutters preventing a cable being placed under the terminal, with the terminal partly open or closed
. Alignment and spacing of the terminals permitting connection with the other products in the range via prong supply busbars

4. POSITIONING - CONNECTION *(continued)*

Connection *(continued)*:

. Terminal depth: 14 mm at the top and 13 mm at the bottom
. Screw head: mixed, slotted and Pozidriv no. 2
. Tightening torques:
- Recommended: 1.6 to 2 Nm
- Min.: 1.2 Nm
- Max.: 2.8 Nm

Conductor type:

. Copper cable or supply busbar
. Cable cross-section

	Without ferrule	With ferrule
Rigid cable	**1 x 0.75 to 16 mm² 2 x 0.75 to 6 mm²**	**-**
Flexible cable	**1 x 0.75 to 10 mm² 2 x 0.75 to 4 mm²**	**1 x 0.75 to 10 mm²**

. Prong busbar, alone or with a flexible wire (without ferrule) 10 mm² or a connection terminal in the same terminal.

Recommended tools:

. For the terminals, screwdriver with 5.5 mm blade or Pozidriv no. 2 screwdriver
. For attaching or removing the DIN rail, screwdriver with 5.5 mm blade or Pozidriv no. 2 screwdriver

Manual actuation of the MCB:

. Ergonomic 2-position handle
. "I-ON": Device closed
. "O-OFF": Device open

Contact status display:

. By marking of the handle
- "O-OFF" in white on a green background = contacts open
- "I-ON" in white on a red background = contacts closed

Locking:

. Padlocks possible in the open and closed positions with padlock support (Cat. No. 4 063 03) and Ø 5 mm padlock (Cat. No. 4 063 13) or Ø 6 mm padlock (Cat. No. 0 227 97)
. Sealing possible in the open and closed positions

Sealing:

. Possible in the open or closed positions

Labelling:

. Circuit identification by way of a label inserted in the label holder situated on the front of the product.







5. GENERAL CHARACTERISTICS

Neutral earthing system:
. IT, TT, TN

Marking on the front side:
. By permanent ink pad printing

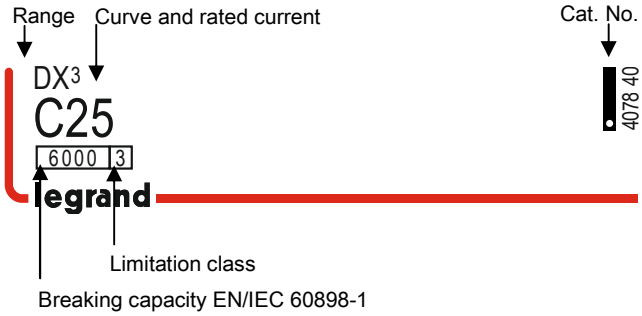

Marking on the upper panel:

. By permanent ink pad printing

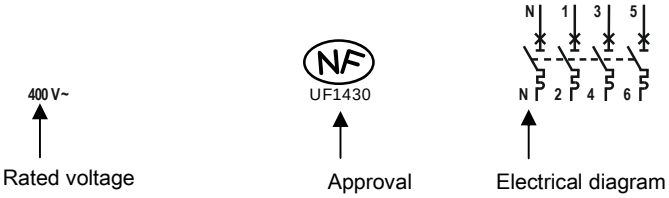

. The terminals upstream and downstream of the neutral pole are marked with an "N" moulded close to the screw heads.

Miniimum operating voltage:
. U = 12 V AC/DC

Maximum operating voltage:
. U = 440 V

Breaking capacity on one single pole (phase pole):
. In accordance with I_{IT} EN60947-2 – Appendix H (double fault in IT system): 3 kA at 400 V ~ and 3 kA at 230 V~
. In accordance with Icn1 EN60898-1: 4.5 kA at 230 V ~ and 10k A at 127 V~

Breaking capacity:

Standard	Breaking capacity	Voltage between poles	Breaking capacity
EN/IEC 60898-1	Ics	230 V	**10 kA**
	Icn		**10 kA**
	Ics	400 V	**6 kA**
	Icn		**6 kA**
EN/IEC 60947-2	Icu	400 V	**10 kA**
	Ics		**50 % Icu**

Isolation distance:
. The distance between the contacts is greater than 5.5 mm with the handle in the open position.
. The MCB is suitable for isolation in accordance with standard EN/IEC 60898-1.

5. GENERAL CHARACTERISTICS *(continued)*

Insulation voltage:
. Ui = 500 V in accordance with standard EN/IEC 60898-1

Degree of pollution:
. 2 in accordance with standard EN/IEC 60898-1

Dielectric strength:
. 2,000 V

Rated impulse withstand voltage:
. Uimp = 4 kV

Degree or class of protection:
. Terminals protected against direct contact, Class of protection against solid objects and liquids (wired device): IP20 in accordance with standards IEC 529 – EN 60529 and NF 20-010
. front panel protected against direct contact: IP40
. Class II in relation to metallic conductive parts
. Class of protection against mechanical impacts IK02 in accordance with standard EN 62262.

Plastic materials:
. Polyamide and P.B.T.

Enclosure heat and fire resistance:
. Resistance to glow wire tests at 960°C, in accordance with standard EN/IEC 60898-1
. Classification V2, in accordance with standard UL94

Higher heating potential:
. The heat potential is assessed at: 3.7 MJ

Closing and opening effort via the handle:
. 5N on opening
. 19N on closing

Mechanical endurance:
. Compliant with standard EN/IEC 60898-1
. Tested with 20,000 operations with no load

Electrical endurance:
. Compliant with standard EN/IEC 60898-1
. Tested with 10,000 operations with load (at In x Cos φ 0.9)

Sinusoidal vibration resistance (in accordance with IEC 68.2.6):
. Axes: x – y – z
. Frequency: 10 to 55 Hz
. Acceleration: 3g (1g = 9.81m.s^{-2})

Resistance to tremors:
. In accordance with standard EN/IEC 60898-1

Ambient temperatures:
. Operation: from - 25°C to + 70°C
. Storage: from - 40°C to + 70°C

DC operation:
. 60 V DC:
- Icn = 4500 A in accordance with standard EN/IEC 60898-1
- Magnetic threshold overrating:
  C curve: 5 to 15 In
  D curve: 10 to 20 In

5. GENERAL CHARACTERISTICS *(continued)*

Frequency:

. Operation at 400 Hz: yes
. Magnetic tripping depending on the frequency
- from 16 2/3 Hz to 60 Hz: no correction
- 400 Hz: the magnetic tripping threshold increases by 45%

Packaged volume:

Packaging	Volume (dm^3)
Per 1	**0.52**

Average unit weight per catalogue number:

. 3P: 0.25 kg
. 4P: 0.30 kg

Derating of MCBs function of the number of devices placed side by side:

When several MCBs are installed side by side and operate simultaneously, the heat dissipation of one pole is limited. This results in an increased operating temperature for the circuit breakers which may cause false tripping. Applying the following coefficients to the operating currents is recommended.

Number of MCBs side by side	Coefficient
2 - 3	**0.9**
4 – 5	**0.8**
6 - 9	**0.7**
≥ 10	**0.6**

These values are provided by recommendation IEC 60439-1 and the standards NF C 63421 and EN 60439-1.
In order to avoid having to use these coefficients there must be good ventilation and the devices must be kept apart using the spacing elements Cat. No. 4 063 07 (0.5 module).

Derating of MCBs in the event of use with fluorescent tubes:

Electronic or ferromagnetic ballasts provide a high inrush current for a very short time. These currents are liable to cause tripping of the circuit breakers.
The maximum number of ballasts per MCB stated by the lamp and ballast manufacturers in their catalogues should be taken into account during installation.

Impact of height:

	≤2000 m	3,000 m	4,000 m	5,000 m
Dielectric strength	**2,000 V**	**1,750 V**	**1,500 V**	**1,250 V**
Maximum operating voltage	**400 V**	**400 V**	**400 V**	**400 V**
Derating at 30°C	**none**	**none**	**none**	**none**

Power dissipated in W per pole in In:

. MCBs in In/Un

Calibres	6 A	10 A	13 A	16 A	20 A	25 A	32 A
P (W) Pôle	**1.9**	**1.5**	**2.3**	**3**	**3.2**	**3.2**	**3**

5. GENERAL CHARACTERISTICS *(continued)*

Derating of MCBs depending on the ambient temperature:

. The nominal characteristics of a circuit breaker are modified depending on the ambient temperature which prevails in the cabinet or enclosure where the MCB is located.
. Reference temperature: 30°C in accordance with standard EN/IEC 60898-1.

In (A)	-25°C	-10°C	0°C	10°C	20°C	30°C	40°C	50°C	60°C	70°C
6	**7**	**7**	**6.8**	**6.6**	**6.3**	**6**	**5.7**	**5.4**	**5.1**	**4.8**
10	**12**	**12**	**11.5**	**11**	**10.5**	**10**	**9.5**	**9**	**8.5**	**8**
13	**15.6**	**15.6**	**15**	**14.3**	**13.7**	**13**	**12.3**	**11.7**	**11**	**10.4**
16	**19.2**	**19.2**	**18.4**	**17.6**	**16.8**	**16**	**15.2**	**14.4**	**13.6**	**12.8**
20	**24**	**24**	**23**	**22**	**21**	**20**	**19**	**18.7**	**18.2**	**17.5**
25	**30**	**30**	**28.7**	**27.5**	**26.2**	**25**	**23.7**	**22.6**	**21.5**	**20.5**
32	**38.4**	**38.4**	**36.8**	**35.2**	**33.6**	**32**	**30.4**	**29**	**27.5**	**26**

Association and coordination of a MCB with a protective device located upstream:

This association allows a device's breaking capacity to be increased by combining it with another protective device placed upstream.
This combination makes it possible to use a downstream device with a breaking capacity which is lower than the maximum prospective short-circuit current at its installation point.

Association and coordination with upstream fuses:

. Three-phase network (+N) 400 V/415 V in accordance with standard EN/IEC 60947-2
. TT neutral earthing or TNS system

		Upstream fuse									
		gG and aM types									
Downstream MCB		≤20 A	25 A	32 A	40 A	50 A	63 A	80 A	100 A	125 A	160 A
DX³ 6000 / 10 kA C et D curves	≤ 13 A	**100 kA**	**100 kA**	**100 kA**	**100 kA**	**100 kA**	**100 kA**	**100 kA**	**100 kA**	**100 kA**	**40 kA**
	16 A	**-**	**100 kA**	**100 kA**	**100 kA**	**100 kA**	**100 kA**	**100 kA**	**100 kA**	**100 kA**	**40 kA**
	20 A	**-**	**-**	**100 kA**	**100 kA**	**100 kA**	**100 kA**	**100 kA**	**100 kA**	**100 kA**	**40 kA**
	25 A	**-**	**-**	**-**	**100 kA**	**100 kA**	**100 kA**	**100 kA**	**100 kA**	**100 kA**	**40 kA**
	32 A	**-**	**-**	**-**	**-**	**100 kA**	**100 kA**	**100 kA**	**100 kA**	**100 kA**	**40 kA**

Association and coordination with upstream MCBs:

. Three-phase network (+N) 400 V/415 V in accordance with standard EN/IEC 60947-2
. TT neutral earthing or TNS system

		Upstream MCB		
		DX³ 10000 / 16 kA B, C and D curves		
Downstream MCB		≤ 25 A	32 A	40 à 125 A
DX³ 6000 / 10 kA C curve	≤ 20 A	**16 kA**	**16 kA**	**16 kA**
	25 A	**-**	**16 kA**	**16 kA**
	32 A	**-**	**-**	**16 kA**

5. CARACTERISTIQUES GENERALES *(suite)*

Association et coordination avec des disjoncteurs modulaires en amont :

. En réseau triphasé (+N) 400 V / 415 V selon la norme IEC 60947-2

. Régime de Neutre TT ou TNS

		Upstream MCB				
		DX³ 10000 / 16 kA B and C curves				
Downstream MCB		≤ 25 A	32 A	40 A	53 A	63 à 125 A
DX³ 6000 / 10 kA D curve	≤ 10 A	**16 kA**	**16 kA**	**16 kA**	**16 kA**	**16 kA**
	16 A	-	**16 kA**	**16 kA**	**16 kA**	**16 kA**
	20 A	-	-	**16 kA**	**16 kA**	**16 kA**
	25 A	-	-	-	**16 kA**	**16 kA**
	32 A	-	-	-	-	**16 kA**

		Upstream MCB		
		DX³ 10000 / 16 kA D curve		
Downstream MCB		≤ 25 A	32 A	40 à 125 A
DX³ 6000 / 10 kA D curve	≤ 20 A	**16 kA**	**16 kA**	**16 kA**
	25 A	-	**16 kA**	**16 kA**
	32 A	-	-	**16 kA**

		Upstream MCB								
		DX³ 25 kA B , C and D curves			DX³ 36 kA C curve			DX³ 50 kA B , C and D curves		
Downstream MCB		≤ 25 A	32 A	40 à 125 A	≤ 25 A	32 A	40 à 80 A	≤ 25 A	32 A	40 à 63 A
DX³ 6000 / 10 kA C curve	≤ 20 A	**25 kA**	**25 kA**	**25 kA**	**36 kA**	**36 kA**	**36 kA**	**50 kA**	**50 kA**	**50 kA**
	25 A	-	**25 kA**	**25 kA**	-	**36 kA**	**36 kA**	-	**50 kA**	**50 kA**
	32 A	-	-	**25 kA**	-	-	**36 kA**	-	-	**50 kA**

5. GENERAL CHARACTERISTICS *(continued)*

Association and coordination with upstream MCBs:

. Three-phase network (+N) 400 V/415 V in accordance with standard EN/IEC 60947-2
. TT neutral earthing or TNS system

		Upstream MCB				
		DX³ 25 kA B , C and D curves				
Downstream MCB		≤ 25 A	32 A	40 A	50 A	63 à 125 A
DX³ 6000 / 10 kA D curve	≤ 10A	**25 kA**	**25 kA**	**25 kA**	**25 kA**	**25 kA**
	16 A	-	**25 kA**	**25 kA**	**25 kA**	**25 kA**
	20 A	-	-	**25 kA**	**25 kA**	**25 kA**
	25 A	-	-	-	**25 kA**	**25 kA**
	32 A	-	-	-	-	**25 kA**

		Upstream MCB				
		DX³ 36 kA C curve				
Downstream MCB		≤ 25 A	32 A	40 A	50 A	63 à 80 A
DX³ 6000 / 10 kA D curve	≤ 10A	**36 kA**	**36 kA**	**36 kA**	**36 kA**	**36 kA**
	16 A	-	**36 kA**	**36 kA**	**36 kA**	**36 kA**
	20 A	-	-	**36 kA**	**36 kA**	**36 kA**
	25 A	-	-	-	**36 kA**	**36 kA**
	32 A	-	-	-	-	**36 kA**

		Upstream MCB				
		DX³ 50 kA B and C curves				
Downstream MCB		≤ 25 A	32 A	40 A	50 A	63 A
DX³ 6000 / 10 kA D curve	≤ 10A	**50 kA**	**50 kA**	**50 kA**	**50 kA**	**50 kA**
	16 A	-	**50 kA**	**50 kA**	**50 kA**	**50 kA**
	20 A	-	-	**50 kA**	**50 kA**	**50 kA**
	25 A	-	-	-	**50 kA**	**50 kA**
	32 A	-	-	-	-	**50 kA**

5. GENERAL CHARACTERISTICS *(continued)*

Association and coordination with upstream MCBs:

. Three-phase network (+N) 400 V/415 V in accordance with standard EN/IEC 60947-2
. TT neutral earthing or TNS system

		Upstream MCB		
		DX³ 50 kA D curve		
Downstream MCB		≤ 25 A	32 A	40 à 63 A
DX³ 6000 / 10 kA D curve	≤ 10A	**50 kA**	**50 kA**	**50 kA**
	16 A	**-**	**50 kA**	**50 kA**
	20 A	**-**	**-**	**50 kA**

Association and coordination with upstream Moulded Case Circuit Breakers (MCCBs):

. Three-phase network (+N) 400 V/415 V in accordance with standard EN/IEC 60947-2
. TT neutral earthing or TNS system

		Upstream MCCB											
		DPX³ 160 16 kA			DPX³ 160 25 kA			DPX³ 160 36 kA			DPX³ 160 50 kA		
Downstream MCB		16 A	25 A	40 à 160 A	16A	25A	40 à 160 A	16A	25A	40 à 160 A	16A	25A	40 à 160 A
DX³ 6000 / 10 kA C and D curves	≤ 13 A	**16 kA**	**16 kA**	**16 kA**	**25 kA**	**25 kA**	**25 kA**	**25 kA**	**25 kA**	**25 kA**	**25 kA**	**25 kA**	**25 kA**
	16 A	**-**	**16 kA**	**16 kA**	**-**	**25 kA**	**25 kA**	**-**	**25 kA**	**25 kA**	**-**	**25 kA**	**25 kA**
	20 A	**-**	**16 kA**	**16 kA**	**-**	**25 kA**	**25 kA**	**-**	**25 kA**	**25 kA**	**-**	**25 kA**	**25 kA**
	25 A	**-**	**-**	**16 kA**	**-**	**-**	**25 kA**	**-**	**-**	**25 kA**	**-**	**-**	**25 kA**
	32 A	**-**	**-**	**16 kA**	**-**	**-**	**25 kA**	**-**	**-**	**25 kA**	**-**	**-**	**25 kA**

		Upstream MCCB			
		DPX³ 250 25 kA	DPX³ 250 36 kA	DPX³ 250 50 kA	DPX³ 250 70 kA
Downstream MCB		25 à 250 A	25 à 250 A	25 à 250 A	25 à 250 A
DX³ 6000 / 10 kA C and D curves	≤ 32 A	**25 kA**	**25 kA**	**25 kA**	**25 kA**

5. GENERAL CHARACTERISTICS *(continued)*

Association and coordination with upstream Moulded Case Circuit Breakers (MCCBs):

. Three-phase network (+N) 400 V/415 V in accordance with standard EN/IEC 60947-2
. TT neutral earthing or TNS system

		Upstream MCCB				
		DPX / DPX-H / DPX-L 250		DPX / DPX-H 630	DPX / DPX-H 1250	DPX / DPX-H 1600
Downstream MCB		25 A	40 à 250 A	250 à 630 A	500 à 1250 A	630 à 1600 A
DX³ 6000 / 10 kA C and D curves	≤ 20 A	**25 kA**	**25 kA**	**25 kA**	**25 kA**	**25 kA**
	25 A	-	**25 kA**	**25 kA**	**20 kA**	**20 kA**
	32 A	-	**25 kA**	**25 kA**	**15 kA**	**15 kA**

		Upstream MCCB	
Downstream MCB		DPX 250 ER AB	DPX 400 AB
DX³ 6000 / 10 kA C and D curves	≤ 32 A	**25 kA**	**25 kA**

Association and coordination with upstream fuses:

. Three-phase network (+N) 230 V/240 V in accordance with standard EN/IEC 60947-2
. TT neutral earthing or TNS system

		Upstream fuse									
		gG and aM types									
Downstream MCB		≤20 A	25 A	32 A	40 A	50 A	63 A	80 A	100 A	125 A	160 A
DX³ 6000 / 10 kA C and D curves	≤ 13 A	**100 kA**	**100 kA**	**100 kA**	**100 kA**	**100 kA**	**100 kA**	**100 kA**	**100 kA**	**100 kA**	**40 kA**
	16 A	-	**100 kA**	**100 kA**	**100 kA**	**100 kA**	**100 kA**	**100 kA**	**100 kA**	**100 kA**	**40 kA**
	20 A	-	-	**100 kA**	**100 kA**	**100 kA**	**100 kA**	**100 kA**	**100 kA**	**100 kA**	**40 kA**
	25 A	-	-	-	**100 kA**	**100 kA**	**100 kA**	**100 kA**	**100 kA**	**100 kA**	**40 kA**
	32 A	-	-	-	-	**100 kA**	**100 kA**	**100 kA**	**100 kA**	**100 kA**	**40 kA**

5. GENERAL CHARACTERISTICS *(continued)*

Association and coordination with upstream MCBs:

. Three-phase network (+N) 230 V/240 V in accordance with standard EN/IEC 60947-2
. TT neutral earthing or TNS system

		Upstream MCB		
		DX³ 10000 / 16 kA B, C and D curves		
Downstream MCB		≤ 25 A	32 A	40 à 125 A
DX³ 6000 / 10 kA C curve	≤ 20 A	**32 kA**	**32 kA**	**25 kA**
	25 A	**-**	**32 kA**	**25 kA**
	32 A	**-**	**-**	**25 kA**

		Upstream MCB				
		DX³ 10000 / 16 kA B and C curves				
Downstream MCB		≤ 25 A	32 A	40 A	50 A	63 à 125 A
DX³ 6000 / 10 kA D curve	≤ 10A	**32 kA**	**32 kA**	**25 kA**	**25 kA**	**25 kA**
	16 A	**-**	**32 kA**	**25 kA**	**25 kA**	**25 kA**
	20 A	**-**	**-**	**25 kA**	**25 kA**	**25 kA**
	25 A	**-**	**-**	**-**	**25 kA**	**25 kA**
	32 A	**-**	**-**	**-**	**-**	**25 kA**

		Upstream MCB		
		DX³ 10000 / 16 kA D curve		
Downstream MCB		≤ 25 A	32 A	40 à 125 A
DX³ 6000 / 10 kA D curve	≤ 20 A	**32 kA**	**32 kA**	**25 kA**
	25 A	**-**	**32 kA**	**25 kA**
	32 A	**-**	**-**	**25 kA**

5. GENERAL CHARACTERISTICS *(continued)*

Association and coordination with upstream MCBs:

. Three-phase network (+N) 230 V/240 V in accordance with standard EN/IEC 60947-2
. TT neutral earthing or TNS system

		Upstream MCB								
		DX³ 25 kA B, C and D curves			DX³ 36kA C curve			DX³ 50 kA B, C and D curves		
Downstream MCB		≤ 25 A	32 A	40 à 125 A	≤ 25 A	32 A	40 à 80 A	≤ 25 A	32 A	40 à 63 A
DX³ 6000 / 10 kA C curve	≤ 20 A	**50 kA**	**50 kA**	**25 kA**	**50 kA**	**50 kA**	**50 kA**	**50 kA**	**50 kA**	**50 kA**
	25 A	-	**50 kA**	**25 kA**	-	**50 kA**	**50 kA**	-	**50 kA**	**50 kA**
	32 A	-	-	**25 kA**	-	-	**50 kA**	-	-	**50 kA**

		Upstream MCB				
		DX³ 25 kA B et C curves				
Downstream MCB		≤ 25 A	32 A	40 A	50 A	63 à 125 A
DX³ 6000 / 10 kA D curve	≤ 10A	**50 kA**	**50 kA**	**25 kA**	**25 kA**	**25 kA**
	16 A	-	**50 kA**	**25 kA**	**25 kA**	**25 kA**
	20 A	-	-	**25 kA**	**25 kA**	**25 kA**
	25 A	-	-	-	**25 kA**	**25 kA**
	32 A	-	-	-	-	**25 kA**

		Upstream MCB		
		DX³ 25 kA D curve		
Downstream MCB		≤ 25 A	32 A	40 à 63 A
DX³ 6000 / 10 kA D curve	≤ 10A	**50 kA**	**50 kA**	**25 kA**
	16 A	-	**50 kA**	**25 kA**
	20 A	-	-	**25 kA**

5. GENERAL CHARACTERISTICS *(continued)*

Association and coordination with upstream MCBs:

. Three-phase network (+N) 230 V/240 V in accordance with standard EN/IEC 60947-2
. TT neutral earthing or TNS system

		Upstream MCB				
		DX³ 36 kA C curve				
Downstream MCB		≤ 25 A	32 A	40 A	50 A	63 à 80 A
DX³ 6000 / 10 kA D curve	≤ 10A	**50 kA**	**50 kA**	**50 kA**	**50 kA**	**50 kA**
	16 A	-	**50 kA**	**50 kA**	**50 kA**	**50 kA**
	20 A	-	-	**50 kA**	**50 kA**	**50 kA**
	25 A	-	-	-	**50 kA**	**50 kA**
	32 A	-	-	-	-	**50 kA**

		Upstream MCB				
		DX³ 50 kA B et C curves				
Downstream MCB		≤ 25 A	32 A	40 A	50 A	63 A
DX³ 6000 / 10 kA D curve	≤ 10A	**50 kA**	**50 kA**	**50 kA**	**50 kA**	**50 kA**
	16 A	-	**50 kA**	**50 kA**	**50 kA**	**50 kA**
	20 A	-	-	**50 kA**	**50 kA**	**50 kA**
	25 A	-	-	-	**50 kA**	**50 kA**
	32 A	-	-	-	-	**50 kA**

		Upstream MCB		
		DX³ 50 kA D curve		
Downstream MCB		≤ 25 A	32 A	40 à 63 A
DX³ 6000 / 10 kA D curve	≤ 10A	**50 kA**	**50 kA**	**25 kA**
	16 A	-	**50 kA**	**25 kA**
	20 A	-	-	**25 kA**

5. GENERAL CHARACTERISTICS *(continued)*

Association and coordination with upstream Moulded Case Circuit Breakers (MCCBs):

. Three-phase network (+N) 230 V/240 V in accordance with standard EN/IEC 60947-2

. TT neutral earthing or TNS system

		Upstream MCCB											
		DPX³ 160 16 kA			DPX³ 160 25 kA			DPX³ 160 36 kA			DPX³ 160 50 kA		
Downstream MCB		16 A	25 A	40 à 160 A	16 A	25 A	40 à 160 A	16 A	25 A	40 à 160 A	16 A	25 A	40 à 160 A
DX³ 6000 / 10 kA C and D curves	≤ 13 A	**28 kA**	**28 kA**	**28 kA**	**40 kA**	**40 kA**	**40 kA**	**50 kA**	**50 kA**	**50 kA**	**50 kA**	**50 kA**	**50 kA**
	16 A	-	**28 kA**	**28 kA**	-	**40 kA**	**40 kA**	-	**50 kA**	**50 kA**	-	**50 kA**	**50 kA**
	20 A	-	**28 kA**	**28 kA**	-	**40 kA**	**40 kA**	-	**50 kA**	**50 kA**	-	**50 kA**	**50 kA**
	25 A	-	-	**28 kA**	-	-	**40 kA**	-	-	**50 kA**	-	-	**50 kA**
	32 A	-	-	**28 kA**	-	-	**40 kA**	-	-	**50 kA**	-	-	**50 kA**

		Upstream MCCB			
		DPX³ 250 - 25 kA	DPX³ 250 - 36 kA	DPX³ 250 - 50 kA	DPX³ 250 - 70 kA
Downstream MCB		≤ 250 A	≤ 250 A	≤ 250 A	≤ 250 A
DX³ 6000 / 10 kA C and D curves	≤ 32 A	**40 kA**	**50 kA**	**50 kA**	**50 kA**

		Upstream MCCB				
		DPX / DPX-H / DPX-L 250		DPX / DPX-H 630	DPX / DPX-H 1250	DPX / DPX-H 1600
Downstream MCB		25A	40 à 250 A	≤ 630 A	≤ 1250 A	≤ 1600 A
DX³ 6000 / 10 kA C and D curves	≤ 20 A	**50 kA**	**50 kA**	**50 kA**	**50 kA**	**50 kA**
	25 A	-	**50 kA**	**50 kA**	**50 kA**	**50 kA**
	32 A	-	**50 kA**	**50 kA**	**50 kA**	**50 kA**

		Upstream MCCB	
Downstream MCB		DPX 250 ER AB	DPX 400 AB
DX³ 6000 / 10 kA C and D curves	≤ 32 A	**50 kA**	**50 kA**

5. GENERAL CHARACTERISTICS *(continued)*

Selectivity between two levels of protection

. The downstream MCB must always have a magnetic threshold and a rated current lower than those of the upstream protection.
. Selectivity or Discrimination is said to be total (T) if there is discrimination up to the value of breaking capacity (in accordance with standard EN/IEC 60947-2) of the downstream MCB.

Discrimination with upstream fuses:

. Discrimination limit with a voltage of 400 V ~ (Values in A)

		Upstream fuse							
		gG type							
Downstream MCB		32 A	40 A	50 A	63 A	80 A	100 A	125 A	160 A
DX³ 6000 / 10 kA C curve	6 A	**1300**	**1900**	**2500**	**4000**	**4600**	**T**	**T**	**T**
	10 A	-	**1600**	**2200**	**3200**	**3600**	**7000**	**T**	**T**
	13 A	-	**1400**	**1800**	**2600**	**3000**	**5600**	**8000**	**T**
	16 A	-	**1400**	**1800**	**2600**	**3000**	**5600**	**8000**	**T**
	20 A	-	**1200**	**1500**	**2200**	**2500**	**4600**	**6300**	**T**
	25 A	-	-	**1300**	**2000**	**2200**	**4100**	**5500**	**9000**
	32 A	-	-	**1200**	**1700**	**1900**	**3500**	**4500**	**8000**

		Upstream fuse							
		gG type							
Downstream MCB		32 A	40 A	50 A	63 A	80 A	100 A	125 A	160 A
DX³ 6000 / 10 kA D curve	6 A	**1200**	**1600**	**2200**	**4000**	**4200**	**8000**	**T**	**T**
	10 A	-	**1600**	**2200**	**3200**	**3600**	**7000**	**T**	**T**
	16 A	-	**1400**	**1800**	**2600**	**3000**	**5600**	**8000**	**T**
	20 A	-	**1200**	**1500**	**2200**	**2500**	**4600**	**6300**	**T**
	25 A	-	-	**1200**	**1800**	**2100**	**3700**	**5000**	**6000**
	32 A	-	-	-	**1500**	**1800**	**3000**	**4000**	**5000**

		Upstream fuse								
		aM type								
Downstream MCB		25 A	32 A	40 A	50 A	63 A	80 A	100 A	125 A	160 A
DX³ 6000 / 10 kA C curve	6 A	**1000**	**1600**	**2100**	**3200**	**6200**	**T**	**T**	**T**	**T**
	10 A	-	**1100**	**1700**	**2500**	**5000**	**7800**	**T**	**T**	**T**
	13 A	-	**1000**	**1400**	**2100**	**4000**	**6000**	**9000**	**T**	**T**
	16 A	-	**1000**	**1400**	**2100**	**4000**	**6000**	**9000**	**T**	**T**
	20 A	-	-	**1300**	**1800**	**3400**	**5100**	**7000**	**T**	**T**
	25 A	-	-	**1100**	**1600**	**3000**	**4500**	**6000**	**9300**	**T**
	32 A	-	-	-	**1300**	**2400**	**3800**	**5000**	**7700**	**9000**

. T = Total discrimination

5. GENERAL CHARACTERISTICS *(continued)*

Discrimination with upstream fuses:

. Discrimination limit with a voltage of 400 V ~ (Values in A)

		Upstream fuse								
		aM type								
Downstream MCB		25 A	32 A	40 A	50 A	63 A	80 A	100 A	125 A	160 A
DX³ 6000 / 10 kA D curve	6 A	**9000**	**1400**	**2000**	**2700**	**5500**	**T**	**T**	**T**	**T**
	10 A	**-**	**1100**	**1700**	**2500**	**5000**	**7800**	**T**	**T**	**T**
	16 A	**-**	**1000**	**1400**	**2100**	**4000**	**6000**	**9000**	**T**	**T**
	20 A	**-**	**-**	**1300**	**1800**	**3400**	**5100**	**7000**	**T**	**T**
	25 A	**-**	**-**	**1000**	**1500**	**2700**	**4000**	**5500**	**9000**	**T**
	32 A	**-**	**-**	**-**	**1100**	**2100**	**3500**	**4700**	**7500**	**T**

Discrimination with upstream MCBs:

. Discrimination limit with a voltage of 400 V ~ (Values in A)

		Upstream MCB											
		DX³ 4500 / 6 kA - DX³ 6000 / 10 kA - DX³ 10000 / 16 kA B curve											
Downstream MCB		10 A	13 A	16 A	20 A	25 A	32 A	40 A	50 A	63 A	80 A	100 A	125 A
DX³ 6000 / 10 kA C curve	6 A	**-**	**52**	**64**	**80**	**100**	**128**	**160**	**200**	**252**	**4000**	**T**	**T**
	10 A	**-**	**-**	**-**	**80**	**100**	**128**	**160**	**200**	**252**	**3000**	**5000**	**T**
	13 A	**-**	**-**	**-**	**-**	**100**	**128**	**160**	**200**	**252**	**2500**	**4000**	**6000**
	16 A	**-**	**-**	**-**	**-**	**-**	**128**	**160**	**200**	**252**	**2000**	**3600**	**5500**
	20 A	**-**	**-**	**-**	**-**	**-**	**-**	**160**	**200**	**252**	**1600**	**3000**	**4000**
	25 A	**-**	**-**	**-**	**-**	**-**	**-**	**-**	**200**	**252**	**1300**	**2400**	**3300**
	32 A	**-**	**-**	**-**	**-**	**-**	**-**	**-**	**-**	**252**	**1000**	**1800**	**2700**

. T = Total discrimination

5. GENERAL CHARACTERISTICS *(continued)*

Discrimination with upstream MCBs:

. Discrimination limit with a voltage of 400 V ~ (Values in A)

		Upstream MCB											
		DX³ 4500 / 6 kA - DX³ 6000 / 10 kA - DX³ 10000 / 16 kA B curve											
Downstream MCB		10 A	13 A	16 A	20 A	25 A	32 A	40 A	50 A	63 A	80 A	100 A	125 A
DX³ 6000 / 10 kA D curve	6 A	-	-	-	-	100	128	160	200	252	4000	T	T
	10 A	-	-	-	-	-	-	160	200	252	3000	5000	T
	16 A	-	-	-	-	-	-	-	200	252	2000	3600	5500
	20 A	-	-	-	-	-	-	-	-	252	1600	3000	4000
	25 A	-	-	-	-	-	-	-	-	-	1300	2400	3300
	32 A	-	-	-	-	-	-	-	-	-	-	1800	2700

		Upstream MCB											
		DX³ 3000 - DX³ 4500 / 6 kA - DX³ 6000 / 10 kA - DX³ 10000 / 16 kA C curve											
Downstream MCB		10 A	13 A	16 A	20 A	25 A	32 A	40 A	50 A	63 A	80 A	100 A	125 A
DX³ 6000 / 10 kA C curve	6 A	75	98	120	150	187	240	300	375	472	4000*	T*	T*
	10 A	-	98	120	150	187	240	300	375	472	3000	5000*	T*
	13 A	-	-	120	150	187	240	300	375	472	2500	4000*	6000*
	16 A	-	-	-	150	187	240	300	375	472	2000	3600*	5500*
	20 A	-	-	-	-	187	240	300	375	472	1600	3000	4000*
	25 A	-	-	-	-	-	240	300	375	472	1300	2400	3300*
	32 A	-	-	-	-	-	-	300	375	472	1000	1800	2700

. T = Total discrimination

. * : If the discrimination value stated in the table is greater than the breaking capacity of the upstream MCB then the breaking capacity of the upstream device must be taken as the discrimination value (the discrimination value may not exceed the breaking capacity of the upstream device).

5. GENERAL CHARACTERISTICS *(continued)*

Discrimination with upstream MCBs:

. Discrimination limit with a voltage of 400 V ~ (Values in A)

		Upstream MCB											
		DX³ 3000 - DX³ 4500 / 6 kA - DX³ 6000 / 10 kA - DX³ 10000 / 16 kA C curve											
Downstream MCB		10 A	13 A	16 A	20 A	25 A	32 A	40 A	50 A	63 A	80 A	100 A	125 A
DX³ 6000 / 10 kA D curve	6 A	-	-	120	150	187	240	300	375	472	4000*	T*	T*
	10 A	-	-	-	150	187	240	300	375	472	3000	5000*	T*
	16 A	-	-	-	-	-	240	300	375	472	2000	3600*	5500*
	20 A	-	-	-	-	-	-	300	375	472	1600	3000	4000*
	25 A	-	-	-	-	-	-	-	375	472	1300	2400	3300*
	32 A	-	-	-	-	-	-	-	-	472	1000	1800	2700

		Upstream MCB											
		DX³ 4500 / 4,5 kA - DX³ 6000 / 10 kA - DX³ 10000/16kA D curve											
Downstream MCB		10 A	13 A	16 A	20 A	25 A	32 A	40 A	50 A	63 A	80 A	100 A	125 A
DX³ 6000 / 10 kA C curve	6 A	120	156	192	240	300	384	480	600	756	4000	T	T
	10 A	-	-	192	240	300	384	480	600	756	3000	5000	T
	13 A	-	-	-	240	300	384	480	600	756	2500	4000	6000
	16 A	-	-	-	240	300	384	480	600	756	2000	3600	5500
	20 A	-	-	-	-	300	384	480	600	756	1600	3000	4000
	25 A	-	-	-	-	-	384	480	600	756	1300	2400	3300
	32 A	-	-	-	-	-	-	480	600	756	1100	1450	2700

. T = Total discrimination

. * : If the discrimination value stated in the table is greater than the breaking capacity of the upstream MCB then the breaking capacity of the upstream device must be taken as the discrimination value (the discrimination value may not exceed the breaking capacity of the upstream device).

5. GENERAL CHARACTERISTICS *(continued)*

Discrimination with upstream MCBs:

. Discrimination limit with a voltage of 400 V ~ (Values in A)

		Upstream MCB											
		DX³ 4500 / 4,5 kA - DX³ 6000 / 10 kA - DX³ 10000 / 16 kA D curve											
Downstream MCB		10 A	13 A	16 A	20 A	25 A	32 A	40 A	50 A	63 A	80 A	100 A	125 A
DX³ 6000 / 10 kA D curve	6 A	-	156	192	240	300	384	480	600	756	4000	T	T
	10 A	-	-	192	240	300	384	480	600	756	3000	5000	T
	16 A	-	-	-	240	300	384	480	600	756	2000	3600	5500
	20 A	-	-	-	-	300	384	480	600	756	1600	3000	4000
	25 A	-	-	-	-	-	384	480	600	756	1300	2400	3300
	32 A	-	-	-	-	-	-	480	600	756	1100	1450	2700

		Upstream MCB										
		DX³ 25 kA B curve										
Downstream MCB		10 A	16 A	20 A	25 A	32 A	40 A	50 A	63 A	80 A	100 A	125 A
DX³ 6000 / 10 kA C curve	6 A	-	64	80	100	700	1200	1500	3000	4000	T	T
	10 A	-	-	80	100	500	700	1000	1800	3000	5000	T
	13 A	-	-	-	100	400	600	1000	1500	2500	4000	6000
	16 A	-	-	-	-	300	500	700	1300	2000	3600	5500
	20 A	-	-	-	-	-	400	500	1000	1600	3000	4000
	25 A	-	-	-	-	-	-	500	800	1300	2400	3300
	32 A	-	-	-	-	-	-	500	600	1000	1800	2700

. T = Total discrimination

5. GENERAL CHARACTERISTICS *(continued)*

Discrimination with upstream MCBs:

. Discrimination limit with a voltage of 400 V ~ (Values in A)

		Upstream MCB										
		DX³ 25 kA B curve										
Downstream MCB		10 A	16 A	20 A	25 A	32 A	40 A	50 A	63 A	80 A	100 A	125 A
DX³ 6000 / 10 kA D curve	6 A	-	-	-	100	700	1200	1500	3000	4000	T	T
	10 A	-	-	-	-	500	700	1000	1800	3000	5000	T
	16 A	-	-	-	-	-	-	1200	1300	2000	3600	5500
	20 A	-	-	-	-	-	-	-	1000	1600	3000	4000
	25 A	-	-	-	-	-	-	-	-	1300	2400	3300
	32 A	-	-	-	-	-	-	-	-	-	1800	2700

		Upstream MCB										
		DX³ 25 kA C curve										
Downstream MCB		10 A	16 A	20 A	25 A	32 A	40 A	50 A	63 A	80 A	100 A	125 A
DX³ 6000 / 10 kA C curve	6 A	75	120	150	187	700	1200	1500	3000	4000	T	T
	10 A	-	120	150	187	500	700	1000	1800	3000	5000	T
	13 A	-	120	150	187	400	600	1000	1500	2500	4000	6000
	16 A	-	-	150	187	300	500	700	1300	2000	3600	5500
	20 A	-	-	-	187	300	400	500	1000	1600	3000	4000
	25 A	-	-	-	-	240	400	500	800	1300	2400	3300
	32 A	-	-	-	-	-	300	500	600	1000	1800	2700

. T = Total discrimination

5. GENERAL CHARACTERISTICS *(continued)*

Discrimination with upstream MCBs:

. Discrimination limit with a voltage of 400 V ~ (Values in A)

		Upstream MCB										
		DX³ 25 kA C curve										
Downstream MCB		10 A	16 A	20 A	25 A	32 A	40 A	50 A	63 A	80 A	100 A	125 A
DX³ 6000 / 10 kA D curve	6 A	-	120	150	187	700	1200	1500	3000	4000	T	T
	10 A	-	-	150	187	500	700	1000	1800	3000	5000	T
	16 A	-	-	-	-	300	500	700	1300	2000	3600	5500
	20 A	-	-	-	-	-	400	500	1000	1600	3000	4000
	25 A	-	-	-	-	-	-	500	800	1300	2400	3300
	32 A	-	-	-	-	-	-	-	600	1000	1800	2700

		Upstream MCB										
		DX³ 25 kA D curve										
Downstream MCB		10 A	16 A	20 A	25 A	32 A	40 A	50 A	63 A	80 A	100 A	125 A
DX³ 6000 / 10 kA C and D curves	6 A	120	192	240	500	700	1200	1500	3000	4000	T	T
	10 A	-	192	240	300	500	700	1000	1800	3000	5000	T
	13 A	-	-	240	300	400	600	1000	1500	2500	4000	6000
	16 A	-	-	240	300	384	500	700	1300	2000	3600	5500
	20 A	-	-	-	300	384	480	600	1000	1600	3000	4000
	25 A	-	-	-	-	384	480	600	800	1300	2400	3300
	32 A	-	-	-	-	-	480	600	756	1100	1450	2700

. T = Total discrimination

5. GENERAL CHARACTERISTICS *(continued)*

Discrimination with upstream MCBs:

. Discrimination limit with a voltage of 400 V ~ (Values in A)

		Upstream MCB								
		DX³ 36 kA / DX³ 50 kA C curve								
Downstream MCB		10 A	16 A	20 A	25 A	32 A	40 A	50 A	63 A	80 A
DX³ 6000 / 10 kA C curve	6 A	**75**	**120**	**170**	**500**	**700**	**1200**	**1500**	**3000**	**4000**
	10 A	-	**120**	**150**	**210**	**500**	**700**	**1000**	**1800**	**3000**
	13 A	-	**120**	**150**	**200**	**400**	**600**	**1000**	**1500**	**2500**
	16 A	-	-	**150**	**187**	**300**	**500**	**700**	**1300**	**2000**
	20 A	-	-	-	**187**	**300**	**400**	**500**	**1000**	**1600**
	25 A	-	-	-	-	**240**	**400**	**500**	**800**	**1300**
	32 A	-	-	-	-	-	**300**	**500**	**600**	**1000**

		Upstream MCB								
		DX³ 36 kA / DX³ 50 kA C curve								
Downstream MCB		10 A	16 A	20 A	25 A	32 A	40 A	50 A	63 A	80 A
DX³ 6000 / 10 kA D curve	6 A	-	**120**	**170**	**500**	**700**	**1200**	**1500**	**3000**	**4000**
	10 A	-	-	**150**	**210**	**500**	**700**	**1000**	**1800**	**3000**
	16 A	-	-	-	-	**300**	**500**	**700**	**1300**	**2000**
	20 A	-	-	-	-	-	**400**	**500**	**1000**	**1600**
	25 A	-	-	-	-	-	-	**500**	**800**	**1300**
	32 A	-	-	-	-	-	-	-	**600**	**1000**

. T = Total discrimination

5. GENERAL CHARACTERISTICS *(continued)*

Discrimination with upstream MCBs:

. Discrimination limit with a voltage of 400 V ~ (Values in A)

		Upstream MCB							
		DX³ 50 kA B curve							
Downstream MCB		10 A	16 A	20 A	25 A	32 A	40 A	50 A	63 A
DX³ 6000 / 10 kA C curve	6 A	-	64	170	500	700	1200	1500	3000
	10 A	-	-	150	210	500	700	1000	1800
	13 A	-	-	-	200	400	600	1000	1500
	16 A	-	-	-	-	300	500	700	1300
	20 A	-	-	-	-	-	400	500	1000
	25 A	-	-	-	-	-	-	500	800
	32 A	-	-	-	-	-	-	500	600

		Upstream MCB							
		DX³ 50 kA B curve							
Downstream MCB		10 A	16 A	20 A	25 A	32 A	40 A	50 A	63 A
DX³ 6000 / 10 kA D curve	6 A	-	-	-	500	700	1200	1500	3000
	10 A	-	-	-	-	-	700	1000	1800
	16 A	-	-	-	-	-	-	-	1000
	20 A	-	-	-	-	-	-	-	-
	25 A	-	-	-	-	-	-	-	-
	32 A	-	-	-	-	-	-	-	-

. T = Total discrimination

5. GENERAL CHARACTERISTICS *(continued)*

Discrimination with upstream MCBs:

. Discrimination limit with a voltage of 400 V ~ (Values in A)

		Upstream MCB							
		DX³ 50 kA D curve							
Downstream MCB		10 A	16 A	20 A	25 A	32 A	40 A	50 A	63 A
DX³ 6000 / 10 kA C and D curves	6 A	**120**	**192**	**240**	**500**	**700**	**1200**	**1500**	**3000**
	10 A	**-**	**192**	**240**	**300**	**500**	**700**	**1000**	**1800**
	13 A	**-**	**-**	**240**	**300**	**400**	**600**	**1000**	**1500**
	16 A	**-**	**-**	**240**	**300**	**384**	**500**	**700**	**1300**
	20 A	**-**	**-**	**-**	**300**	**384**	**480**	**600**	**1000**
	25 A	**-**	**-**	**-**	**-**	**384**	**480**	**600**	**800**
	32 A	**-**	**-**	**-**	**-**	**-**	**480**	**600**	**756**

Discrimination with upstream MCCBs:

. Discrimination limit with a voltage of 400 V ~ (Values in A)

		Upstream MCCB							
		DPX³ 160 16 kA à 50 kA							
Downstream MCB		16 A	25 A	40 A	63 A	80 A	100 A	125 A	160 A
DX³ 6000 / 10 kA C curve	6 A	**T**	**T**	**T**	**T**	**T**	**T**	**T**	**T**
	10 A	**5000**	**T**	**T**	**T**	**T**	**T**	**T**	**T**
	13 A	**-**	**T**	**T**	**T**	**T**	**T**	**T**	**T**
	16 A	**-**	**T**	**T**	**T**	**T**	**T**	**T**	**T**
	20 A	**-**	**5000**	**5000**	**5000**	**5000**	**6000**	**T**	**T**
	25 A	**-**	**-**	**4500**	**4500**	**4500**	**4500**	**T**	**T**
	32 A	**-**	**-**	**-**	**3000**	**4000**	**4000**	**T**	**T**

. T = Total discrimination

5. GENERAL CHARACTERISTICS *(continued)*

Discrimination with upstream MCCBs:

. Discrimination limit with a voltage of 400 V ~ (Values in A)

		Upstream MCCB							
		DPX³ 160 16 kA à 50 kA							
Downstream MCB		16 A	25 A	40 A	63 A	80 A	100 A	125 A	160 A
DX³ 6000 / 10 kA D curve	6 A	**6000**	**T**	**T**	**T**	**T**	**T**	**T**	**T**
	10 A	**5000**	**7500**	**7500**	**7500**	**T**	**T**	**T**	**T**
	16 A	**-**	**6000**	**6000**	**6000**	**6000**	**T**	**T**	**T**
	20 A	**-**	**5000**	**5000**	**5000**	**5000**	**6000**	**T**	**T**
	25 A	**-**	**-**	**4500**	**4500**	**4500**	**4500**	**8500**	**T**
	32 A	**-**	**-**	**-**	**3000**	**4000**	**4000**	**7000**	**T**

		Upstream MCCB		
		DPX³ 250		
Downstream MCB		40 A	100 A	160 à 250 A
DX³ 6000 / 10 kA C curve	6 A	**T**	**T**	**T**
	10 A	**T**	**T**	**T**
	13 A	**8000**	**T**	**T**
	16 A	**6000**	**T**	**T**
	20 A	**5000**	**8000**	**T**
	25 A	**4000**	**6000**	**T**
	32 A	**-**	**5000**	**T**

. T = Total discrimination

5. GENERAL CHARACTERISTICS *(continued)*

Discrimination with upstream MCCBs:

. Discrimination limit with a voltage of 400 V ~ (Values in A)

		Upstream MCCB		
		DPX³ 250		
Downstream MCB		40 A	100 A	160 à 250 A
DX³ 6000 / 10 kA D curve	6 A	**T**	**T**	**T**
	10 A	**T**	**T**	**T**
	16 A	**6000**	**T**	**T**
	20 A	**5000**	**8000**	**T**
	25 A	**-**	**6000**	**T**
	32 A	**-**	**5000**	**T**

		Upstream MCCB				
		DPX 250 / DPX-H 250 Thermal-magnetic				
Downstream MCB		25 A	40 A	63 A	100 A	160 à 250 A
DX³ 6000 / 10 kA C curve	6 A	**6000**	**6000**	**6000**	**T**	**T**
	10 A	**5000**	**5000**	**5000**	**T**	**T**
	13 A	**4000**	**4000**	**4000**	**T**	**T**
	16 A	**4000**	**4000**	**4000**	**T**	**T**
	20 A	**-**	**4000**	**4000**	**8000**	**T**
	25 A	**-**	**3000**	**3000**	**6000**	**T**
	32 A	**-**	**-**	**2000**	**5000**	**T**

. T = Total discrimination

5. GENERAL CHARACTERISTICS *(continued)*

Discrimination with upstream MCCBs:

. Discrimination limit with a voltage of 400 V ~ (Values in A)

		Upstream MCCB				
		DPX 250 / DPX-H 250 Thermal-magnetic				
Downstream MCB		25 A	40 A	63 A	100 A	160 à 250 A
DX³ 6000 / 10 kA D curve	6 A	**6000**	**6000**	**6000**	**T**	**T**
	10 A	**5000**	**5000**	**5000**	**T**	**T**
	16 A	**-**	**4000**	**4000**	**T**	**T**
	20 A	**-**	**4000**	**4000**	**8000**	**T**
	25 A	**-**	**-**	**3000**	**6000**	**T**
	32 A	**-**	**-**	**2000**	**5000**	**T**

		Upstream MCCB				
		DPX 250 / DPX-H 250 Electronic				DPX / DPX-H 630 / 1250 / 1600 DMX³ 2500 / 4000
Downstream MCB		40 A	100 A	160 A	250 A	160 à 4000 A
DX³ 6000 / 10 kA C curve	6 A	**T**	**T**	**T**	**T**	**T**
	10 A	**T**	**T**	**T**	**T**	**T**
	13 A	**8000**	**T**	**T**	**T**	**T**
	16 A	**6000**	**T**	**T**	**T**	**T**
	20 A	**5000**	**8000**	**T**	**T**	**T**
	25 A	**4000**	**6000**	**T**	**T**	**T**
	32 A	**-**	**5000**	**T**	**T**	**T**

. T = Total discrimination

5. GENERAL CHARACTERISTICS *(continued)*

Discrimination with upstream MCCBs:

. Discrimination limit with a voltage of 400 V ~ (Values in A)

		Upstream MCCB				
		DPX 250 / DPX-H 250 Electronic				DPX / DPX-H 630 / 1250 / 1600 DMX³ 2500 / 4000
Downstream MCB		40 A	100 A	160 A	250 A	160 à 4000 A
DX³ 6000 / 10 kA D curve	6 A	**T**	**T**	**T**	**T**	**T**
	10 A	**T**	**T**	**T**	**T**	**T**
	16 A	**6000**	**T**	**T**	**T**	**T**
	20 A	**5000**	**8000**	**T**	**T**	**T**
	25 A	**-**	**6000**	**T**	**T**	**T**
	32 A	**-**	**5000**	**T**	**T**	**T**

		Upstream MCCB	
		DPX 250 ER AB	DPX 400 AB
Downstream MCB		90 à 240 A	320 et 400 A
DX³ 6000 / 10 kA C et D curves	6 A	**T**	**T**
	10 A	**T**	**T**
	13 A	**T**	**T**
	16 A	**T**	**T**
	20 A	**T**	**T**
	25 A	**T**	**T**
	32 A	**T**	**T**

. T = Total discrimination

6. COMPLIANCE AND APPROVALS

In accordance with standards:

. EN/IEC 60898-1

Usage in special conditions:

. Category C compliant (testing temperature range from -25°C to +70°C, resistant to salt spray) in accordance with the classification defined in Appendix Q of standard IEC/EN 60947-1

Respect for the environment – Compliance with European Union Directives:

. Compliance with Directive 2002/95/EC of 27/01/03 known as "RoHS" which provides for a restriction on the use of dangerous substances such as lead, mercury, cadmium, hexavalent chromium and polybrominated biphenyl (PBB) and polybrominated diphenyl ether (PBDE) brominated flame retardants from 1st July 2006
. Compliance with the Directive 91/338/EEC of 18/06/91 and decree 94-647 of 27/07/04

Plastic materials:

. Halogen free plastic materials.
. Labelling of parts compliant with ISO 11469 and ISO 1043.

Packaging:

. Design and manufacture of packaging compliant with decree 98-638 of 20/07/98 and Directive 94/62/EC

Approvals obtained:

. France: NF

7. CUVES

Thermal-magnetic tripping curve range typical of C and D curves MCBs:

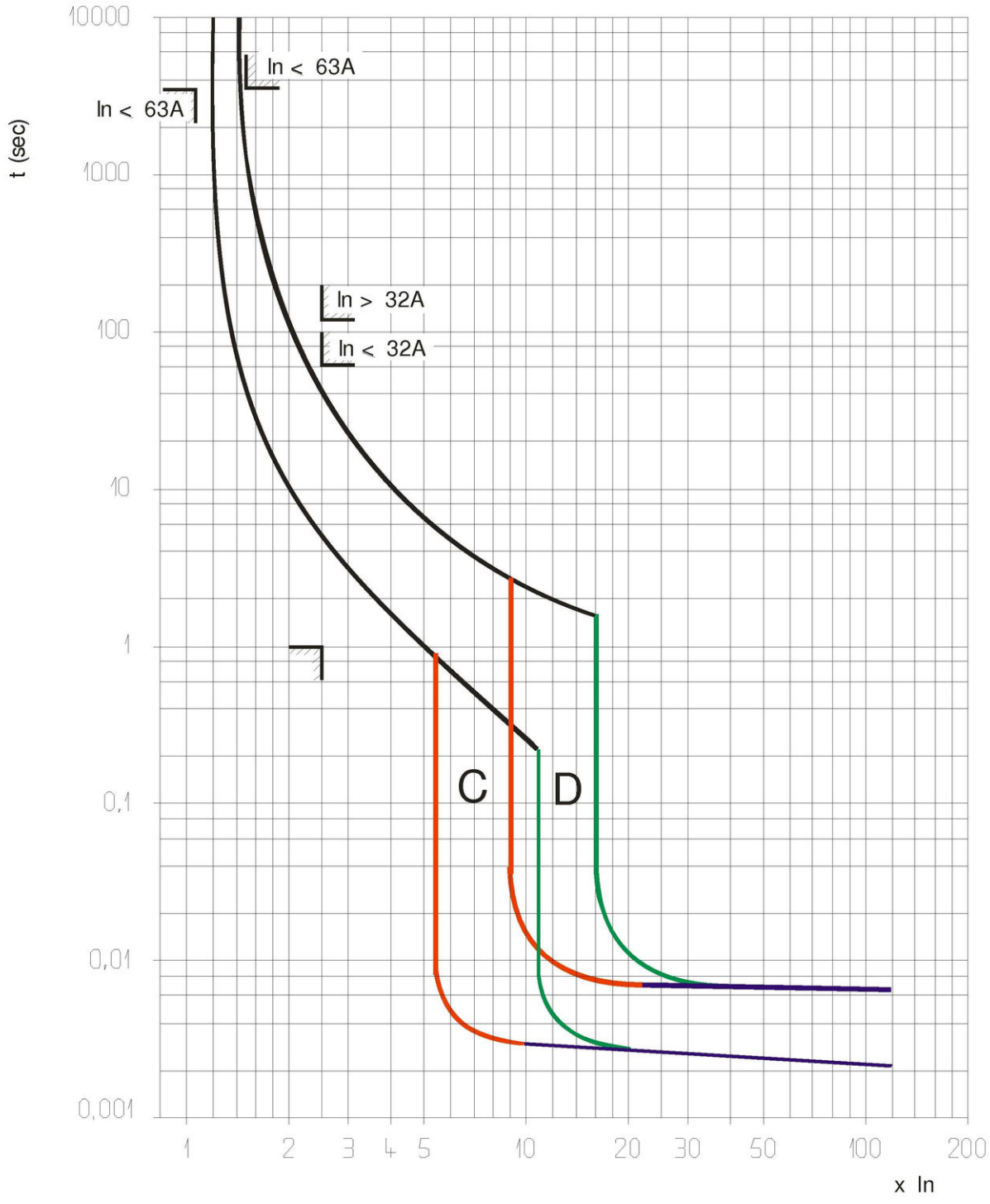

Standard limits
Thermal tripping at ambient temperature = 30°C
In = circuit breaker rated current

7. CURVES *(continued)*

Average thermal-magnetic tripping curves range typical of C curve MCBs:

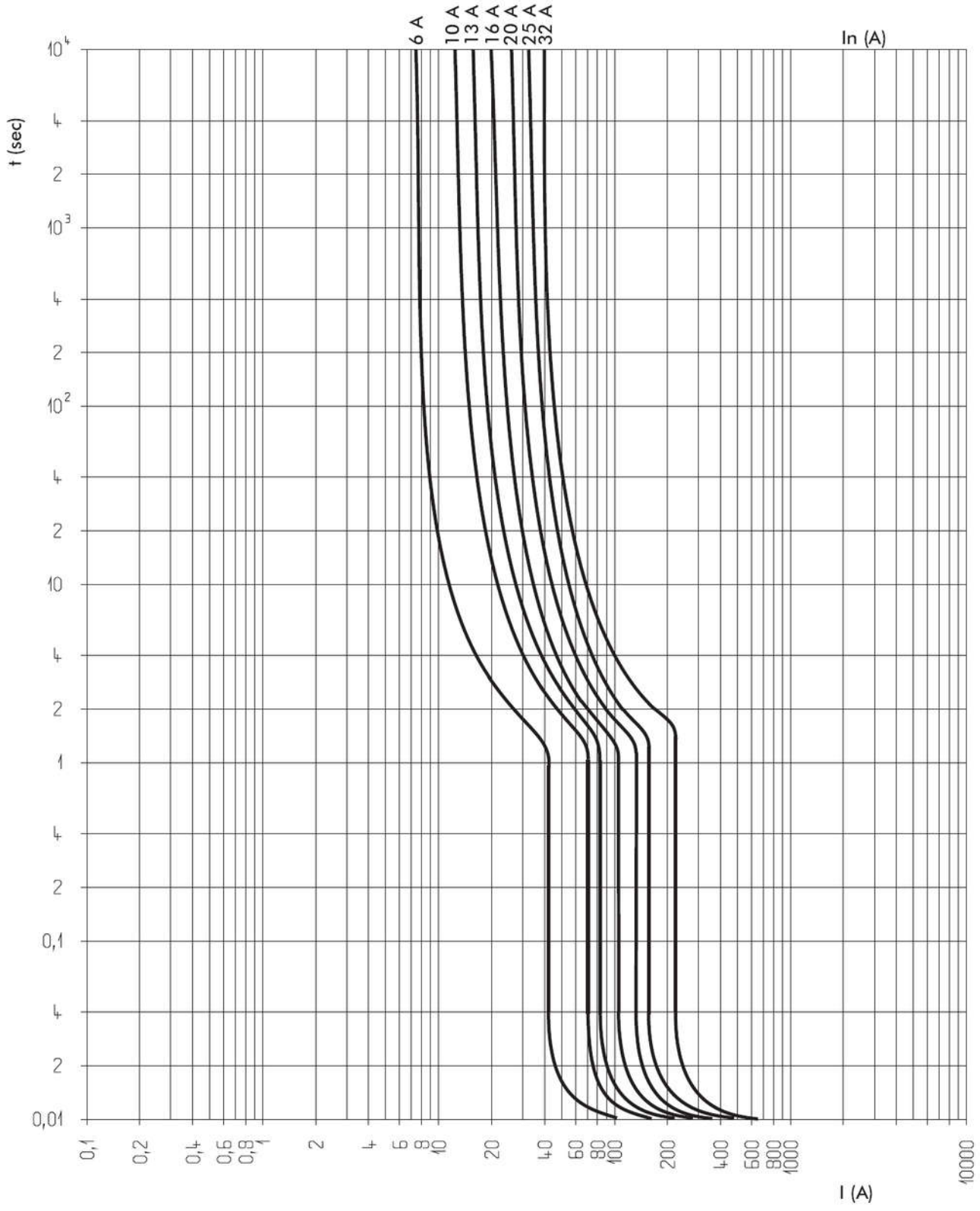

7. CURVES *(continued)*

Average thermal-magnetic tripping curves range typical of D curve MCBs:

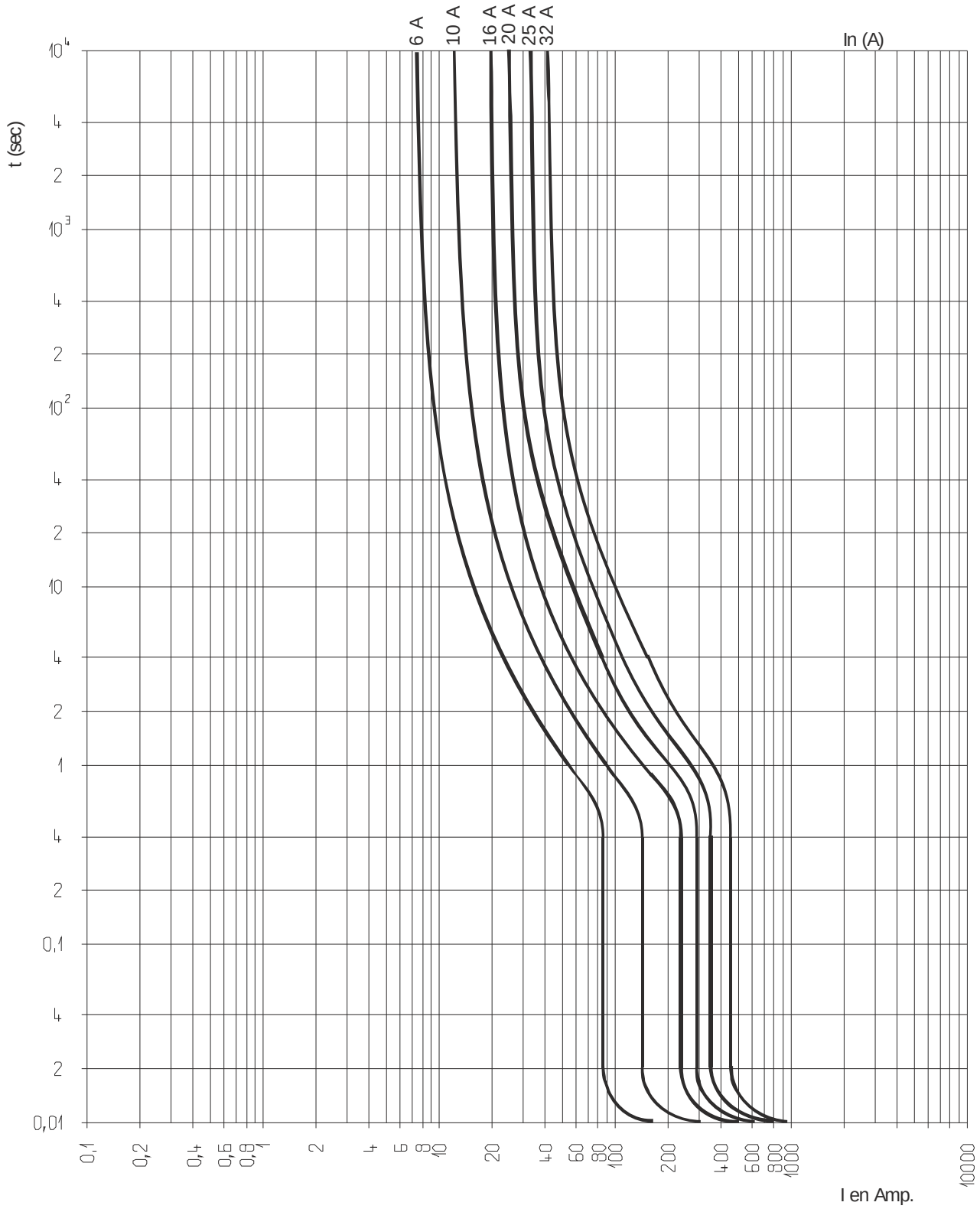

7. CURVES *(continued)*

Current limiting curves:

. C and D curves MCB from 6 A to 32 A

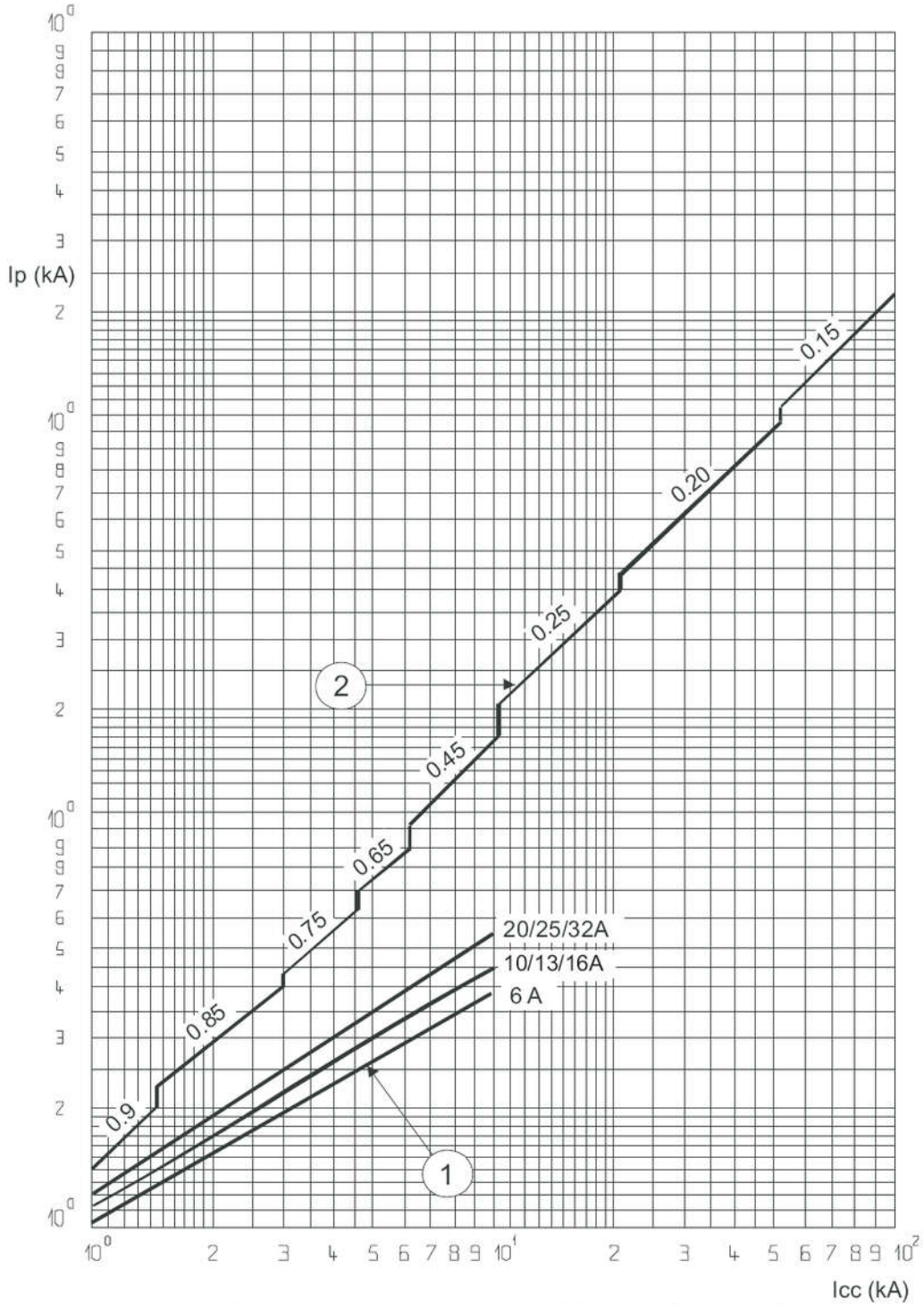

Icc = Prospective short-circuit symmetrical current (rms value in kA)
Ip = Maximum peak value (in kA)
1 = Short-circuit rms current (max. peak)
2 = Unlimited peak currents (max.), corresponding to power factors shown above (0.15 to 0.9)

7. CURVES *(continued)*

Thermal stress limiting curves:

. C curve MCBs from 6 A to 32 A (400 V/50 Hz)

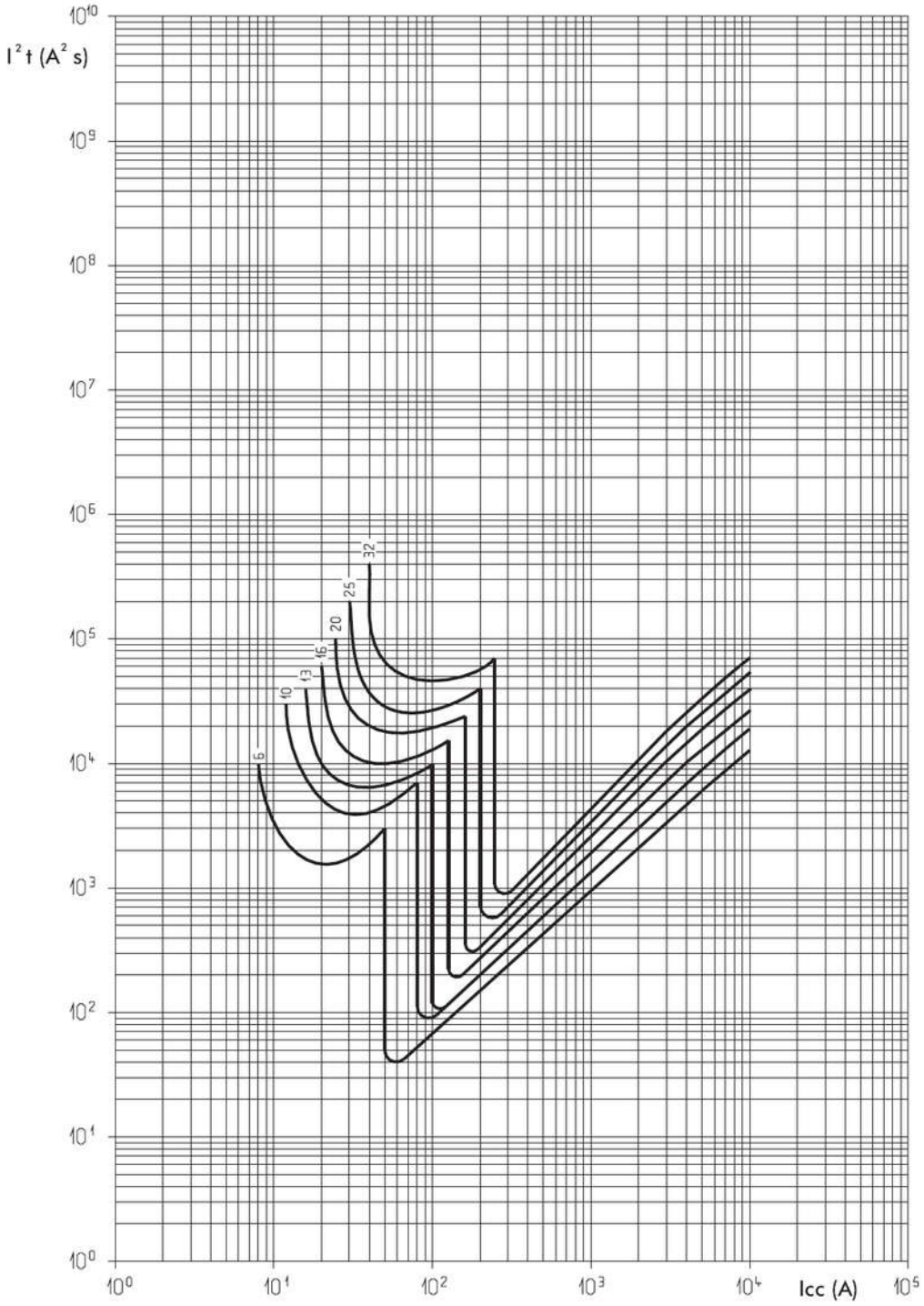

Icc = courant symétrique de court-circuit présumé
(valeur efficace en A)

I²t = contrainte thermique limitée (en A²s)

7. CURVES *(continued)*

Thermal stress limiting curves:

. D curve MCBs from 6 A to 32 A (400 V/50 Hz)

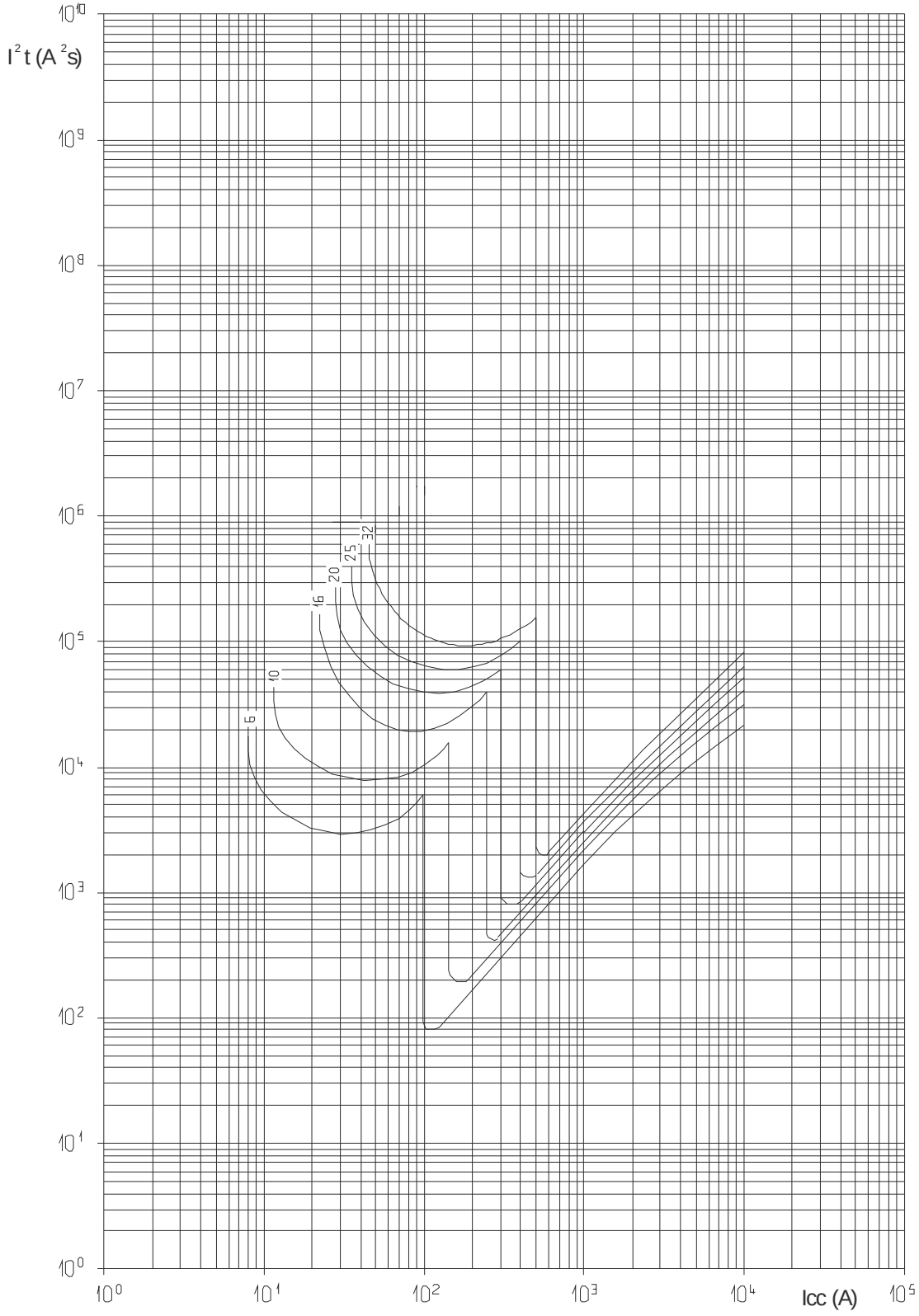

8. EQUIPMENT AND ACCESSORIES

Wiring accessories:

. HX³ 4-pole "screw" supply busbar (Cat. No. 405 210) and 4-pole "head of group" supply busbar (Cat. No. 4 052 00 / 01 / 02)
. Connection terminals (Cat. No. 4 049 05)
. Sealable screwcover (Cat. No. 4 063 04)

Signalling auxiliaries:

. Auxiliary contact (0.5 module, Cat. No. 4 062 58)
. Fault signalling contact (0.5 module, Cat. No. 4 062 60)
. Auxiliary contact that can be changed into fault signalling contact (0.5 module, Cat. No. 4 062 62)
. Auxiliary contact + fault signalling contact that can be changed into 2 auxiliary contacts (1 module, Cat. No. 4 062 66)

Control auxiliaries:

. Shunt trip (1 module, Cat. No. 4 062 76 / 78)
. Under voltage release (1 module, Cat. No. 4 062 80 / 82)
. Stand-alone release for N/C push-button (1.5 module, Cat. No. 4 062 87)
. Power Overvoltage Protection (1 module, Cat. No. 4 062 86)

Motor driven control modules:

. Motor-driven control module(1 module, Cat. No. 4 062 91)
. Motor-driven control module with integrated automatic reset (2 modules, Cat. No. 4 062 93 / 95)

Possible combinations of auxiliaries and circuit breakers:

. The auxiliaries are installed to the left of the circuit breakers
. Maximum number of auxiliaries = 3
. Maximum number of 1 module signalling auxiliaries = 2
. Maximum number of control auxiliaries (Cat. Nos. 4 062 76 to 4 062 87) = 1
. The control auxiliary trip (Cat. Nos. 4 062 76 to 4 062 87) must mandatorily be placed to the left of the signalling auxiliaries (Cat. Nos. 4 062 58 to 4 062 66) where the auxiliaries from these 2 families are connected to the same circuit breaker

Sealing:

. Possible in the open or closed positions

Locking options:

. Via padlock 5 mm in diameter (Cat. No. 4 063 13) or padlock 6 mm in diameter (Cat. No. 0 227 97) and padlock support (Cat. No. 4 063 03)

Installation software:

. XL PRO³